MUH SERIES
UNIT HEATER

IDEAL SPACES

- Factories
- Warehouses
- Garages
- Stairwells
- Shipping Docks
- Power Stations
- Mechanical Rooms

COLORS

- Neutral Gray/Statuary Bronze

DIMENSIONS

- Varies (see diagram)

TEMP RANGE

- 40°– 90°F

CFM

- 350 – 3000

- Wide range of optional control kits are field-installable, increasing the unit's adaptability to specification market
- Small- to medium-case construction is 20-gauge steel with larger cabinet 18-gauge steel; completely enclosed fan motor
- Advanced pull-through air flow design draws air across heating element for even air distribution and cooler element operation
- Specially designed venturi outlet to meet required additional air throw in vertical position
- Branch circuit fusing (when required)
- 2-speed fan selector switch (25 to 50 kW models) and optional fan-only switch for air movement with no heat
- 1- or 3-phase wiring on 5 kW through 10 kW 208/240V and 15 kW 208V units (field-interchangeable)
- Aluminum-finned, copper-clad steel sheath heating element extends life due to cooler sheath temperature and faster heat dissipation
- 24V control transformer standard on most models, providing safer and more accurate means of temperature control. 3 kW and 5 kW, 208-277V, have line voltage controls as standard (24V control available on made-to-order basis)
- Automatic reset linear thermal cut-out, capillary type, provides protection over entire length of element areas (manual reset protection available on made-to-order basis)
- No piping flues, valves or traps needed for installation
- Individual stainless steel adjustable louvers to direct air flow

5 YEAR WARRANTY ELEMENT

1 YEAR WARRANTY WORKMANSHIP

MUH SERIES
UNIT HEATER

MODELS & SPECIFICATIONS

CATALOG NO.	UPC 6-85360	VOLTS	ELECTRICAL DATA			AMPS (3)	CONTROL VOLT (1)	2 STAGE ELEMENT CONTROL	AIR DELIVERY DATA FAN MOTOR DATA					MOUNTING HEIGHT			HOROIZ. THROW	WIRE SIZE	SHIP WT. (LBS.) W/ BRCKT
			PHASE	KW	BTU/HR.				CFM (2)	FPM (2)	ΔT(°F)	VOLTS	RPM (2)	HP	HORIZ.	VERT.			
MUH0381	04721 8	208	1	3	10.2	14.5	208	N/A	350	800	27°	208	1600	1/100	8	9	12	AWG 12	27
MUH0581*	04728 7	208	1-3	5	17	24	208	5A	350	800	45°	208	1600	1/100	8	9	12	AWG 10	27
MUH078	04735 5	208	1-3	7.5	25.6	36	24	5B	650	970	37°	208	1600	1/30	9	14	18	AWG 6	38
MUH108	04741 6	208	1-3	10	34.1	48	24	5B	650	970	49°	208	1600	1/30	9	14	18	AWG 4	38
MUH158	04745 4	208	1-3	15	51.2	72	24	5A	910	1640	52°	208	1530	1/20	11	20	35	AWG 2	53
MUH208	04749 2	208	3	20	68.2	56	24	5A	1320	2060	48°	208	1500	1/10	12	23	41	AWG 4	60
MUH308	04756 0	208	3	30	102.3	84	24	5A	2100/1800	2100/2030	45°/53°	208	1600/1375	1/4	12	20	50	AWG 1	93
MUH508	04766 9	208	3	50	170.5	139	24	5A	3000/2600	3260/2900	53°/61°	208	1525/1420	1/2	15	25	60	AWG 4/0	114
MUH0321	04716 4	208/240	1	2.2/3.0	7.5/10.2	11.0/12.5	208/240	N/A	350	800	27°	208/240	1600	1/100	8	9	12	AWG 12	27
MUH0521*	04722 5	208/240	1-3	3.7/5.0	12.6/17.0	18.0/21.0	208/240	5A	350	800	45°	208/240	1600	1/100	8	9	12	AWG 10	27
MUH072	04730 0	208/240	1-3	5.6/7.5	19.1/25.6	27.0/31.3	24	5B	650	970	37°	208/240	1600	1/30	9	14	18	AWG 8	38
MUH102	04736 2	208/240	1-3	7.5/10.0	25.6/34.1	36.0/42.0	24	5B	650	970	49°	208/240	1600	1/30	9	14	18	AWG 6	38
MUH152	04742 3	208/240	3	11.2/15.0	38.2/51.2	31.3/36.1	24	5C	910	1640	52°	208/240	1530	1/20	11	20	35	AWG 6	53
MUH202	04746 1	208/240	3	15.0/20.0	51.2/68.2	41.2/48.0	24	5C	1320	2060	48°	208/240	1500	1/10	12	23	41	AWG 4	60
MUH252	04750 8	208/240	3	18.7/25.0	63.8/85.2	52.0/60.0	24	5A	2100/1800	2100/2030	38°/44°	208/240	1600/1375	1/4	13	23	50	AWG 3	93
MUH302	04753 9	208/240	3	22.5/30.0	76.7/102.3	63.0/72.3	24	5A	2100/1800	2100/2030	45°/53°	208/240	1600/1375	1/4	12	20	50	AWG 2	93
MUH402	04760 7	208/240	3	30.0/40.0	102.3/136.4	83.4/96.4	24	5A	3000/2600	3260/2900	42°/49°	208/240	1525/1420	1/2	15	28	60	AWG 1/0	114
MUH502	04763 8	208/240	3	37.5/50.0	127.3/170.5	104.2/120.4	24	5A	3000/2600	3260/2900	53°/61°	208/240	1525/1420	1/2	15	25	60	AWG 3/0	114
MUH0371	04720 1	277	1	3	10.2	11	277	N/A	350	800	27°	277	1600	1/100	8	9	12	AWG 14	27
MUH0571	04727 0	277	1	5	17	18	277	N/A	350	800	45°	277	1600	1/100	8	9	12	AWG 10	27
MUH077	04734 8	277	1	7.5	25.6	27	24	5B	650	970	37°	277	1600	1/30	9	14	18	AWG 8	38
MUH107	04740 9	277	1	10	34.1	36	24	5B	650	970	49°	277	1600	1/30	9	14	18	AWG 6	38
MUH0341	04718 8	480	3	3	10.2	3.6	24	N/A	350	800	27°	480	1600	1/100	8	9	12	AWG 14	27
MUH0541	04725 6	480	3	5	17	6	24	N/A	350	800	45°	480	1600	1/100	8	9	12	AWG 14	27
MUH074	04732 4	480	3	7.5	25.6	9	24	5B	650	970	37°	480	1600	1/30	9	14	18	AWG 14	38
MUH104	04738 6	480	3	10	34.1	12	24	5B	650	970	49°	480	1600	1/30	9	14	18	AWG 14	38
MUH154	04743 0	480	3	15	51.2	18	24	5C	910	1640	52°	480	1530	1/20	11	20	35	AWG 10	53
MUH204	04747 8	480	3	20	68.2	24	24	5C	1320	2060	48°	480	1500	1/10	12	23	41	AWG 10	60
MUH254	04751 5	480	3	25	85.2	30	24	5C	2100/1800	2100/2030	38°/44°	480	1600/1375	1/4	13	23	50	AWG 8	93
MUH304	04754 6	480	3	30	102.3	36	24	5C	2100/1800	2100/2030	45°/53°	480	1600/1375	1/4	12	20	50	AWG 6	93
MUH404	04761 4	480	3	40	136.4	48	24	5A	3000/2600	3260/2900	42°/49°	480	1525/1420	1/2	15	28	60	AWG 4	114
MUH504	04764 5	480	3	50	170.5	60.2	24	5A	3000/2600	3260/2900	53°/61°	480	1525/1420	1/2	15	25	60	AWG 4	114
MUH0331	04717 1	347	1	3	10.2	8.6	347	N/A	350	800	27°	347	1600	1/100	8	9	12	AWG 14	27
MUH0531	04724 9	347	1	5	17	14.4	347	N/A	350	800	45°	347	1600	1/100	8	9	12	AWG 10	27
MUH073	04731 7	347	1	7.5	25.6	21.6	24	5B	650	970	37°	347	1600	1/30	9	14	18	AWG 14	38
MUH103	04737 9	347	1	10	34.1	28.8	24	5B	650	970	49°	347	1600	1/30	9	14	18	AWG 14	38
MUH0361	04719 5	600	3	3	10.2	2.9	24	N/A	350	800	27°	600	1600	1/100	8	9	12	AWG 14	27
MUH0561	04726 3	600	3	5	17	4.8	24	N/A	350	800	45°	600	1600	1/100	8	9	12	AWG 10	27
MUH076	04733 1	600	3	7.5	25.6	7.3	24	5B	650	970	37°	600	1600	1/30	9	14	18	AWG 14	38
MUH106	04739 3	600	3	10	34.1	9.7	24	5B	650	970	49°	600	1600	1/30	9	14	18	AWG 14	38
MUH156	04744 7	600	3	15	51.2	14.5	24	5C	910	1640	52°	600	1530	1/20	11	20	35	AWG 12	53
MUH206	04748 5	600	3	20	68.2	19.3	24	5C	1320	2060	48°	600	1500	1/10	12	23	41	AWG 12	60
MUH256	04752 2	600	3	25	85.2	24.2	24	5C	2100/1800	2100/2030	38°/44°	600	1600/1375	1/4	13	23	50	AWG 10	93
MUH306	04755 3	600	3	30	102.3	29	24	5C	2100/1800	2100/2030	45°/53°	600	1600/1375	1/4	12	20	50	AWG 8	93
MUH406	04762 1	600	3	40	136.4	38.7	24	5A	3000/2600	3260/2900	42°/49°	600	1525/1420	1/2	15	28	60	AWG 6	114
MUH506	04765 2	600	3	50	170.5	48.3	24	5A	3000/2600	3260/2900	53°/61°	600	1525/1420	1/2	15	25	60	AWG 3	114

NOTE: All standard units are supplied with a low voltage control transformer and contactor (24V) except MUH03 and MUH05, 208V, 240V and 277V models. Low voltage control on these units is available on made to order. All units are also available on special order for 120V control; internal with transformer or external without transformer. On dual-voltage units CFM, FPM, & RPM ratings are listed at higher voltage operation. On dual-phase units maximum amp draw is listed for respective voltage. 25 thru 50 KW models having two-speed motors and dual CFM ratings are listed in Full Line Catalog. 5A. Standard; 5B. Optional - made to order - amp load unbalanced on three-phase; 5C. Optional - made to order - amp load balanced on three-phase.

*Must use two-stage Thermostat on 3Ø operation.

DIMENSIONS

CATALOG NO.	HEIGHT (IN)	WIDTH (IN)	DEPTH (IN)
MUH03 & 05	16	14	7-1/2
MUH07 & 10	21-3/4	19	7-1/2
MUH15 & 20	21-3/4	19	12-3/4
MUH25 & 30	30	26-5/8	11-3/4
MUH40 & 50	30	26-5/8	17-1/8

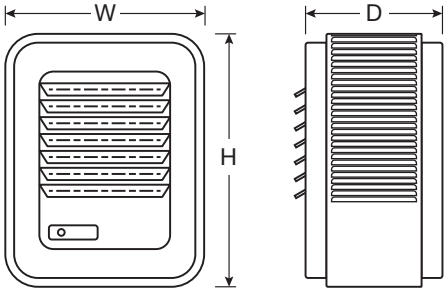

OPTIONAL FIELD-INSTALLED CONTROLS

CATALOG NO.	UPC	DESCRIPTION	ELECTRICAL RATING	COMPATIBLE WITH
UHMT1	6 85360 15241 7	Single Pole Internal Thermostat-Temp Range: 40°- 85°F	25A @ 120, 240VAC Res. 22A @ 277VAC Res.	All MUH Series Heaters (except MUH0521 3 PH, MUH0581 3 PH which use UHMT2)
UHMT2	6 85360 15242 4	Two Stage Internal Thermostat-Temp Range: 40°- 85°F	25A @ 120, 240VAC Res. 22A @ 277VAC Res. 125VA	MUH0521 3 PH, MUH0581 3 PH, MUH158, MUH208, MUH252, MUH302, MUH308, MUH402, MUH404, MUH406, MUH502, MUH504, MUH506, MUH508
MCFS	6 85360 04637 2	Internal Summer Fan Switch 250, 480, 600V.A.C. 1,2 OR 3 PH	Pilot Duty 6A, 600VAC Res. 2 HP	All MUH Series Heaters
MRFS1	6 85360 04708 9	Remote Summer Fan Switch (Line Voltage)	2 HP, 250-480VAC	All MUH Series Heaters
MRFS2	6 85360 04709 6	Remote Summer Fan Switch with Relay (24V Coil-Single Pole Normally Open)	6 AFL, 35 ALR, 250VAC, 60Hz 3 AFL, 18 ALR, 480VAC, 60Hz	All MUH Series Heaters (except MUH0321, MUH0371, MUH0381, MUH0521, MUH0571, MUH0581) Units unless optional control transformer is supplied
MHRT	6 85360 04694 5	Heat Recovery Thermostat with Relay (24V Coil-Single Pole Normally Open) Hi - 120°F, Low - 60°F	6 AFL, 35 ALR, 250VAC, 60Hz 3 AFL, 18 ALR, 480VAC, 60Hz	All MUH Series Heaters (except MUH0321, MUH0371, MUH0381, MUH0521, MUH0571, MUH0581) Units unless optional control transformer is supplied
MPDS25	6 85360 04703 4	Power Disconnect Switch (3-Pole)	30A @ 600VAC, Res.	MUH0321, MUH0341, MUH0371, MUH0381, MUH0521, MUH0541, MUH0571, MUH0581, MUH073, MUH074, MUH076, MUH104, MUH106, MUH154, MUH156, MUH204, MUH206
MPDS60	6 85360 04704 1	Power Disconnect Switch (3-Pole)	80A @ 600VAC, Res.	MUH072, MUH077, MUH078, MUH102, MUH103, MUH107, MUH108, MUH152, MUH202, MUH208, MUH252, MUH254, MUH256, MUH304, MUH306, MUH404, MUH406, MUH504, MUH506

NOTE: Any field installed options assembled in the factory require added surcharge. See price book for charges. MPDS60 disconnect switch is not suitable for field installation on 7.5kw and 10kw unit heaters.

DIFFUSER SELECTOR TABLES FOR VERTICAL MOUNTING

CATALOG NO.	DESCRIPTION	CATALOG NO.	MAX. MOUNTING HEIGHT	(A) DIMENSION	DIFFUSER PATTERN AND AREA
NONE NONE	WITHOUT DIFFUSER No diffuser needed where a straight downflow air pattern is required. For maximum air throw, remove louvers. Any of three diffusers can be added to basic heater.	MUH03 &MUH05 MUH07 & MUH10	9 14	18 26	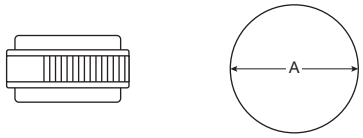
NONE NONE		MUH15 MUH20	20 23	35 40	
NONE NONE		MUH25 MUH30	23 20	63 55	
NONE NONE		MUH40 MUH50	28 25	70 63	
MLDS MLDM	LOUVER DIFFUSER Permits directional (straight line) air flow as in air curtain application over doorways. Rectangular coverage, Louvers can be turned in either direction.	MUH03 & MUH05 MUH07 & MUH10	9 14	25(A) 12(B) 39(A) 19(B)	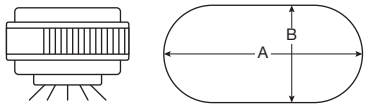
MLDM MLDM		MUH15 MUH20	18 20	50(A) 25(B) 56(A) 28(B)	
MLDL MLDL		MUH25 MUH30	23 20	72(A) 36(B)	
MLDL MLDL		MUH40 MUH50	24 22	88(A) 44(B) 80(A) 40(B)	

MUH SERIES
UNIT HEATER

OPTIONAL MOUNTING BRACKETS

CATALOG NO.	UPC	COMPATIBLE WITH	SHIP WT. (LBS)
B10	6 85360 15229 5	MUH03 - 10	8
B20	6 85360 15230 1	MUH15 & 20	10
B30	6 85360 15231 8	MUH25 & 30	13
B50	6 85360 15232 5	MUH40 & 50	15

OPTIONAL CEILING MOUNTING BRACKETS

CATALOG NO.	UPC	COMPATIBLE WITH	SHIP WT. (LBS)
CMB10	6 85360 15236 3	MUH03 - 10	3
CMB20	6 85360 15237 0	MUH15 & 20	4
CMB30	6 85360 15238 7	MUH25 & 30	5
CMB50	6 85360 15239 4	MUH40 &50	6

OPTIONAL VERTICAL CEILING MOUNTING BRACKETS

CATALOG NO.	UPC	COMPATIBLE WITH	SHIP WT. (LBS)
VDMB5	6 85360 15245 5	MUH03 - 05	5
VDMB20	6 85360 15246 2	MUH07 - 20	7
VDMB50	6 85360 15247 9	MUH25 - 50	9

MOUNTING LIMITATIONS: Unit heaters should not be used in potentially explosive atmospheres. The finish is not intended for direct salt spray exposure in marine applications or the highly corrosive atmospheres of swimming pools, chemical storage bins, etc. Do not install unit heaters above recommended maximum mounting height. Obstructions must not block unit heater air inlet or discharge. Heaters must be mounted at least 7 ft. above the floor to prevent accidental contact with the heating element or fan blade which could cause injury.

FACTORY-INSTALLED OPTIONS FOR CONTROLS & ACCESSORIES

DESCRIPTION
MUH03 & 05 (208, 208/240, 277V Supply) 24 or 120V Control Transformer and Power Contactor 24 or 120V H.C. Power Contactor
MUH03 & 05 (480V Supply) & MUH07 thru MUH50 Optional 120V Control
2-Stage Control of Elements (See Note 5)
Manual Reset
Outlet Mesh (Bird Screen) For all MUH Heaters

NOTE: Any factory-installed options require added surcharge. See price book for charges or contact factory.

BRACKET SIZE
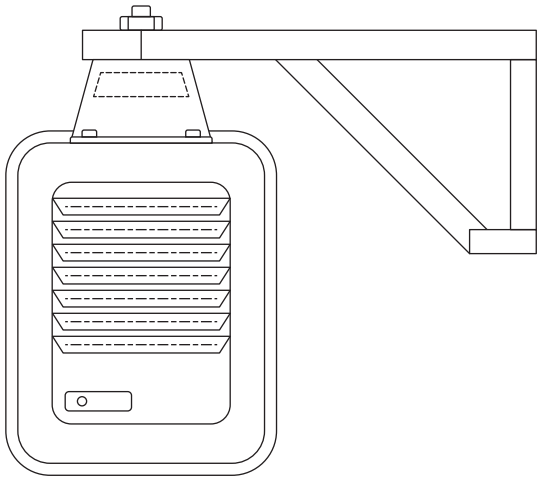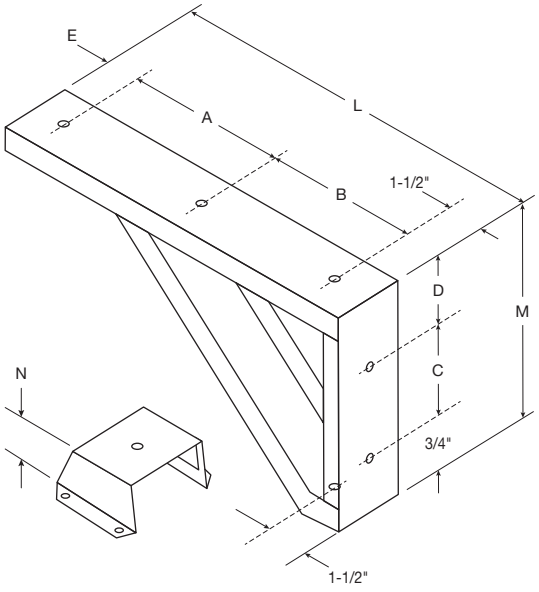
DIMENSION	3-20 kW (IN.)	25-50 kW (IN.)
A	7-1/4	9-7/16
B	9-1/2	14-3/8
C	7-1/4	12-1/8
D	11-5/16	2-1/16
E	2-1/4	3
L	20-1/2	28-15/16
M	9-15/16	14-15/16
N	3-1/4	4-1/2