canplas PLUMBING

Submittal Sheet

Part Description:

3" X 3" X 2" ABS DWV 90 Degree Bend or Elbow with a 2" Low Heel Inlet H X H X Spigot

Part Number:

102248

Approvals and Listings maintained by:
Canplas Industries Ltd
Canada: 1-800-461-5300 USA: 1-888-461-5307

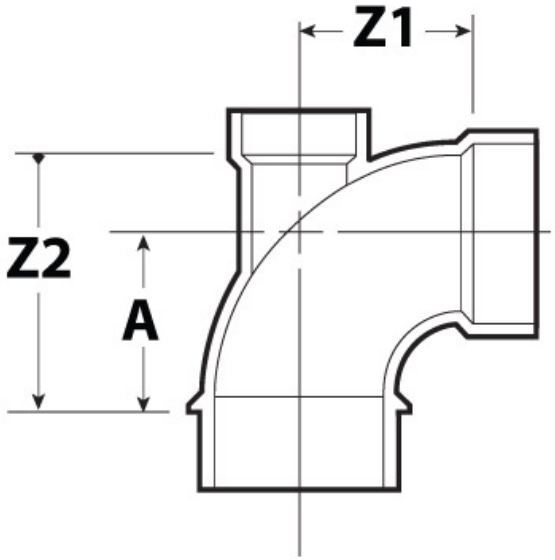

Part #	Part UPC	Colour	Size (inches)	Ctn Qty	Ctn Bar Code	Ctn. Wt (Kgs)	Ctn. Wt (lbs)	Skid Cubic (m)	Skid Cubic (ft)	Ctns/Skid
102248	662671107374	BLACK	3X3X2	15	10662671107371	6.03	13.27	1.86	65.82	32

Dimensions (inches)

A	Z1	Z2
2.98	2.88	4.45