COMPASS®

DATE:	LOCATION:
TYPE:	PROJECT:
CATALOG #:	

CU2SQ

SQUARE HEAD LED EMERGENCY LIGHT

tradeSELECT®

Brochure

FEATURES

- LED life-cycle of more than 10 years
- Quick installation
- Dual-voltage 120 or 277V AC input
- Damp Location Listed 20°C to 30°C (68°F to 86°F)
- Fully adjustable lamp-heads
- Provided with test switch and AC-On indicator
- Remote Capacity (RC) models and AC-On indicator
- Wall or Ceiling mount

UL924 NFPA 70 NFPA 101

RELATED PRODUCTS

CIR Remote COR Remote

SPECIFICATIONS

DESCRIPTION

- The CU2SQ Series offers quality and value with a compact and attractive LED based emergency light
- The white or black housing and lamp-heads are made of high impact UL flame rated thermoplastic
- The square lamp-heads are fully adjustable and glare-free
- Snap together design for quick and easy installation with option of wall or ceiling mount
- The remote capacity unit will run 2 Compass CIR/COR Series single remote lamp-heads or 1 double CIR/COR remote

DESCRIPTION (CONT'D)

- Remote Capacity (RC) Models have a minimum runtime of 120 minutes when no remotes are installed
- Also available with self-test/self-diagnostics to monitor battery/charger failure, battery disconnect and lamp failure
- Includes long-life Nickel Cadmium battery for UL recognized 90 minute emergency lighting

APPLICATION

- The CU2SQ Series can be applied in stair-wells, hallways, offices and commercial applications.

COMPLIANCES

- UL924 Listed for Damp Location
- NFPA 101 and NFPA 70
- OSHA

SELF-DIAGNOSTIC FEATURES

- Fault identification for battery, charger, LED integral lamps and remotes
- Self-Testing monthly and annual for 90 minutes
- Manual testing for 30 second, 15 minute and 90 minutes

WARRANTY

- 2 year full unit warranty
- See HLI Standard Warranty for additional information

ORDERING GUIDE

Catalog Number	Description
CU2SQ	White Thermoplastic, Dual Square Head Emergency Light, 120/277VAC Input, Damp Location Listed, 3.6VDC Output, 0.79W per lamp, NiCad Battery
CU2SQB	Black Thermoplastic, Dual Square Head Emergency Light, 120/277VAC Input, Damp Location Listed, 3.6VDC Output, 0.79W per lamp, NiCad Battery
CU2RCSQ	White Thermoplastic, Dual Square Head Emergency Light, 120/277VAC Input, Damp Location Listed, 3.6VDC Output, 0.79W per lamp, 2.3W of remote capacity to run CIR/COR remotes, NiMh Battery
CU2SQSD	White Thermoplastic, Dual Square Head Emergency Light, 120/277VAC Input, Damp Location Listed, 3.6VDC Output, 0.79W per lamp, Self-Test/Self-Diagnostics, NiCad Battery
CU2RCSQSD	White Thermoplastic, Dual Square Head Emergency Light, 120/277VAC Input, Damp Location Listed, 3.6VDC Output, 0.79W per lamp, Remote Capacity,Self-Test/Self-Diagnostics, NiMh Battery
CU2RCSD	White Finish, Dual-Head LED Emergency Light, 120/277VAC, NiMh Batt. Remote Capacity, 3VDC, 1Watt, Self-Test/Self-Diagnostics

Note: Remote Capacity Unit will only power the Compass Indoor and Outdoor Remote(CIR and COR Series)

Accessories (Order Separately)	
WGEL Wireguard	6.25"H x 14"W x 4" D
CIR Series	Matching LED Indoor Remote Heads
COR Series	Matching LED Outdoor Remote Heads

CIRS

CORS

CIRD

CORD

© 2020 Compass, a division of Hubbell Lighting, Inc. Specifications subject to change without notice.
701 Millennium Blvd • Greenville, SC 29607 / Tel (864)-678-1000 / Website www.compasslightingproducts.com

HUBBELL Lighting

COMPASS®

DATE:	LOCATION:
TYPE:	PROJECT:
CATALOG #:	

CU2SQ

SQUARE HEAD LED EMERGENCY LIGHT

ENERGY CONSUMPTION

	120 VAC	277 VAC
CU2SQ	1.8W	1.8W
CU2RCSQ	2.5W	2.5W

DIMENSIONS

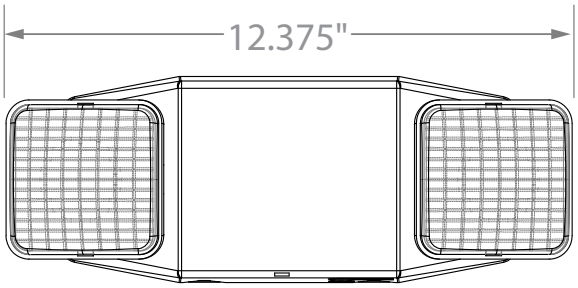

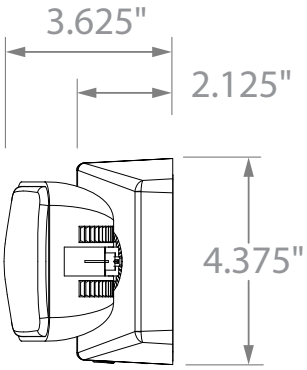

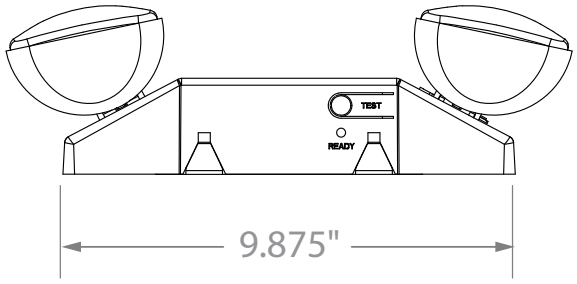

Single Carton Weight	1 lbs.
Master Carton Quantity	12 each

© 2020 Compass, a division of Hubbell Lighting, Inc. Specifications subject to change without notice.
701 Millennium Blvd • Greenville, SC 29607 / Tel (864)-678-1000 / Website www.compasslightingproducts.com

HUBBELL Lighting