Building connections that last™

ASC Engineered Solutions

Series 9191L & Series 9192L

Lead-Free Brass Swing Check Valve Datasheet

SCI An ASC Engineered Solution

Lead-Free Brass Swing Check Valve, Threaded

Series 9191L

Design Features

- California AB1953 lead-free approved
- Meets federal Safe Water Drinking Water Act, lead-free requirement
- 200 lb. WOG/125 lb. WSP
- ANSI/NSF 61.8 approved
- Cast brass body
- Forged brass disc
- ISO 9001:2008 manufacturer

Parts & Materials

No.	Part	Material
1	Name Plate	Aluminium
2	Cap	Cast Brass Alloy C89550
3	Packing	Fibre "H"
4	Disc	Cast Brass Alloy C89550
5	Body	Cast Brass Alloy C89550
6	Screw	Brass ASTM B16-C36000
7	Pin	Brass ASTM B16-C36000

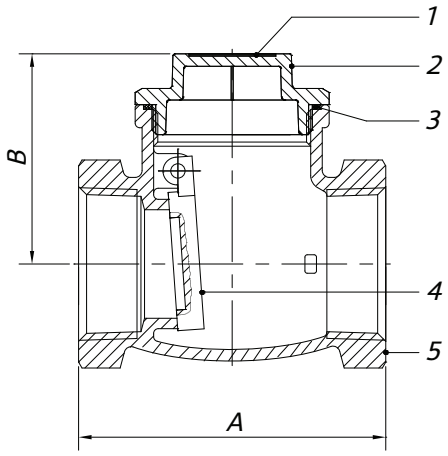

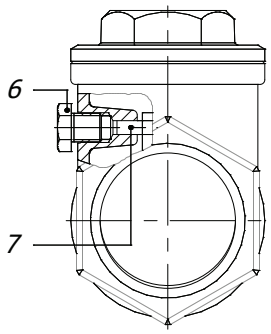

Dimensions

Size	Part Number	Weight	A	B
In		Lb	In	In
½	01739191GL	0.41	2.05	1.50
¾	01739191IL	0.54	2.32	1.58
1	01739191KL	0.74	2.72	1.77
1-¼	01739191LL	1.33	3.11	2.01
1-½	01739191ML	1.65	3.51	2.17
2	01739191NL	2.61	4.29	2.64
2-½	01739191PL	4.5	5.14	3.10
3	01739191QL	6.6	5.77	3.80
4	01739191TL	11.4	6.84	4.25

An ASC Engineered Solution