Submittal Data Information

006e3 ECM Circulator

101-191

Taco Comfort Solutions® A Taco Family Company

Effective: August 16, 2021 **Supersedes:** May 5, 2021

Job: _____ Engineer: _____ Contractor: _____ Rep: _____

ITEM NO.	MODEL NO.	

Specifications

- Maximum Shut-off Head: 13 feet
- Maximum Flow: 11 gpm
- Maximum Operating Pressure: 150 psi (10 bar)
- Maximum Water Temp: 203°F (95°C)
- Minimum Water Temp: 36°F (2°C)
- Electrical Specifications:

  Voltage: 120V, 60 Hz Single phase

  Max. Operating Power: 44W

  Max. AMP Rating: 0.54
- Equipped with a composite casing designed for open loop potable water systems and closed hydronic systems
- Not suitable for chilled water
- Taco circulator pumps are for indoor use only
- Acceptable for use with water or maximum of 50% water/glycol solution in closed hydronic systems

Materials of Construction

Casing: ..... Composite
Stator Housing: ..... Composite
Cartridge: ..... Composite
Impeller: ..... Composite
Shaft: ..... Ceramic
Bearings: ..... Carbon
Thrust Bearing: ..... Ceramic
O-Ring & Gaskets: ..... EPDM

c UL us LISTED

NSF Certified to NSF/ANSI 61 & 372

FC

Applications

The 006e3 is a high-efficiency wet rotor circulator with an ECM permanent magnet motor. It is designed for use in open loop domestic hot water recirculation or closed hydronic systems. A simple 3-setting speed dial allows you to match circulator performance to system requirements. The 006e3LC model includes a 6' power cord.

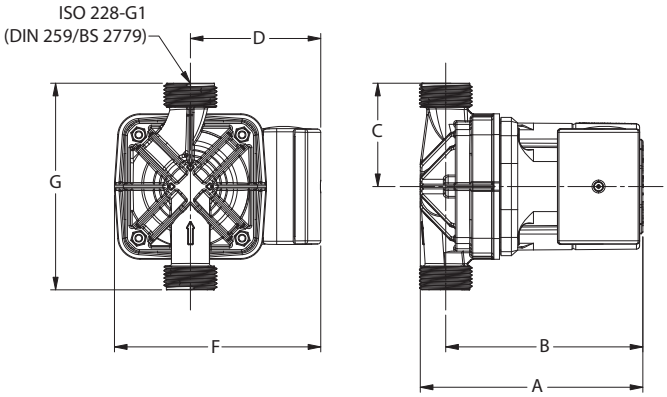

Mounting Positions

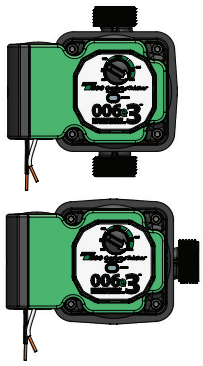

Pump Dimensions & Weights

Model Number (Part Number)	A		B		C		D		F		G		Ship Wt.	
	in.	mm	in.	mm	in.	mm	in.	mm	in.	mm	in.	mm	lbs.	Kg
006e3 (VM1212-DY1-UP2A00)	5-1/2	140	4-7/8	124	2-5/8	67	3-1/4	82	5-1/8	130	5-1/8	130	3.5	1.6
006e3LC (VM1212-DY1-UP2A01)	5-1/2	140	4-7/8	124	2-5/8	67	3-1/4	82	5-1/8	130	5-1/8	130	3.5	1.6

Electrical Data

Model	Volts	Hz	Ph	Max. Amps	Watts	RPM
All Models	120	60	1	.54	44	1590-4830
Motor Type	ECM, Permanent Magnet, Thermally Protected					

HYDRAULIC INSTITUTE | ENERGY RATING

WAIP: 0.050

Model #: 006e

CIRCULATOR PUMP CEI: 0.66 (ER 174)

ENERGY RATING

162 174

Most Consumptive RANGE Least Consumptive

Note: The ER value is dependent on the selected control. Multiple options may be available on this pump, as follows:

· Full Speed
· Manual Speed (Rated)

Power savings (watts) over a baseline case can be estimated by multiplying the ER by WAIP and multiplying by 7.46. Multiplying power savings by operating hours and cost of energy will yield estimated cost savings.

4KYK86 er.pumps.org Apr 2021

Taco Comfort Solutions® A Taco Family Company

Taco, Inc., 1160 Cranston Street, Cranston, RI 02920 | Tel: (401) 942-8000 | FAX: (401) 942-2360

Taco (Canada), Ltd., 8450 Lawson Road, Suite #3, Milton, Ontario L9T 0J8 | Tel: (905) 564-9422 | FAX: (905) 564-9436

Visit our web site: www.TacoComfort.com

| ©2020 Taco, Inc.