Submittal Data Information

101-036

00® Timers/Aquastat

Effective: December 10, 2015 **Supersedes:** June 18, 2014

Job: _____ Engineer: _____ Contractor: _____ Rep: _____

ITEM NO.	MODEL NO.	

24 Hour Analog Clock Timer Performance Data — #265-1

Electrical Characteristics: 115/60/1
Timer Switch: 16A @115V
Timer Interval: 15 Minutes
Clock face: Hour and Minute Hands
Manual Switch: I Permanently ON
Automatic Operation
O Permanently OFF

7 Day Digital Timer Performance Data — #265-3

Electrical Characteristics: 115/60/1
Timer Switch: 16A @115V
Timer Interval: 1 Minute (+) Adjustable
Clock face: Digital with Circulator Programming
Capacitor Backup: 2,500 hours

Temperature Aquastat — Snap Action Temperature Switch — #563-2

Electrical Characteristics: 115/60/1
Connections: 1/2" (Snap on circ. body)
3/4" Copper pipe
Temperature Setting: ON @ 95˚F
OFF @ 115˚F
Contacts: 7 amp SPDT Switch
Wire Leads: 18" – Type 18-2, Round Premium Cable

Application

The Taco Clock Timers and Temperature Aquastat are designed to control the operation of Taco circulators on Domestic Hot Water Recirculation Systems for maximum comfort and energy efficiency. They are adaptable to any 00® Series circulator by attaching the enclosure or wiring to the electrical box.

24 Hour Analog Timer

Operates the circulator at the same pre-set times every day. Time intervals are in 15 minute increments. This user friendly clock has a raised minute hand for easy adjustments, quick-set trippers and an operation switch for Manual ON/OFF or Automatic modes.

7 Day Digital Programmable Timer

Digital Timer can be programmed to operate at different times on different days, weekdays or weekends, for maximum comfort and convenience to match family schedules. Easy circular programming clock face and LCD readout screen. Run time intervals as short as 1 minute provides maximum energy efficiency. A capacitor backup saves settings for up to 2,500 hours during power outages.

Temperature Aquastat

Controls pump operation to maintain system temperature between 95˚F and 115˚F. Easy clip-on Aquastat attaches directly to 3/4" pipe or a 1/2" sweat pump casing.

Shipping Weight

Model	Item	Lbs.	Kg
265-1	Analog Timer	.75	.35
265-3	Digital Timer	.75	.35
563-2	Aquastat	.25	.11

c UL us LISTED

FOR INDOOR USE ONLY

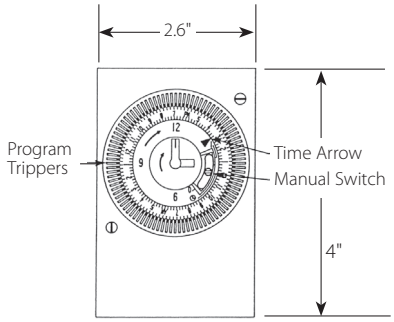

Analog Timer

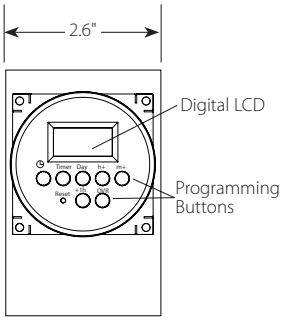

Digital Timer

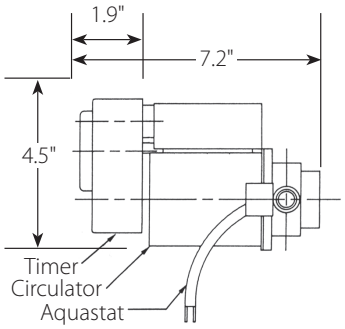

Assembled Timer/Aquastat

A Taco Group Company

Taco Inc., 1160 Cranston Street, Cranston, RI 02920 / (401) 942-8000 / Fax (401) 942-2360
Taco (Canada) Ltd., 8450 Lawson Road, Unit #3, Milton, Ontario L9T 0J8 / (905) 564-9422 / Fax (905) 564-9436
www.TacoComfort.com