canplas PLUMBING

Submittal Sheet

Part Description:

6" X 6" X 3" ABS DWV Wye H X H X H

Part Number:

102343

Approvals and Listings maintained by:
Canplas Industries Ltd
Canada: 1-800-461-5300 USA: 1-888-461-5307

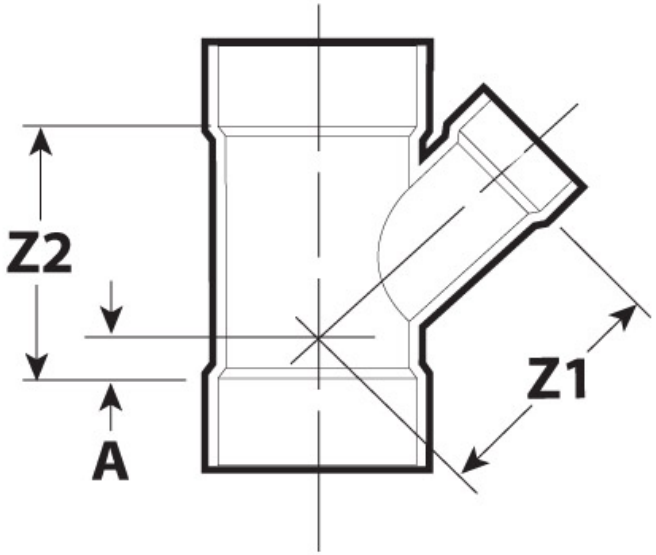

Part #	Part UPC	Colour	Size (inches)	Ctn Qty	Ctn Bar Code	Ctn. Wt (Kgs)	Ctn. Wt (lbs)	Skid Cubic (m)	Skid Cubic (ft)	Ctns/Skid
102343	662671109354	BLACK	6X6X3	4	10662671109351	7.77	17.09	1.90	67.04	18

Dimensions (inches)

A	Z1	Z2
0.60	7.12	7.13