Snap-N-Loc® Basket Strainer

300 Grade Stainless or Brushed Stainless Steel Sink Strainer

DESIGNERS SERIES

Clamshell Package

SS-306

As one of Jomar's more popular basket strainers, the Snap-N-Loc® is known for its original spring-loaded ball bearing post design that snaps perfectly into place, creating a positive leak-proof seal every time. This popular strainer is constructed with a high quality stainless steel deep-cup body, ball bearing, and basket, and comes standard with a brass tail nut. With a sleek design and proven track record, it has become such a favorite among installers that it is offered in brushed or polished stainless steel finish.

Fits sinks which have a thickness between 1/16" and 3/4"

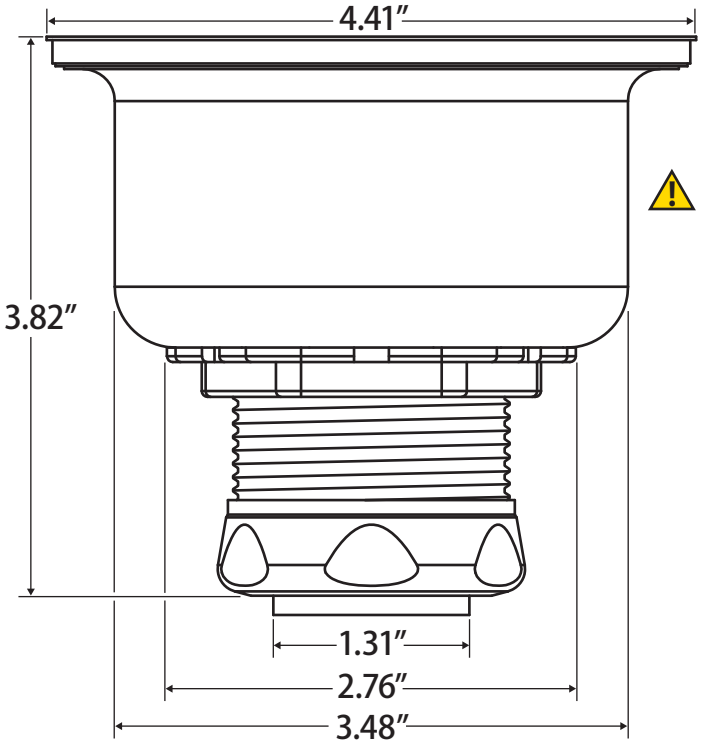

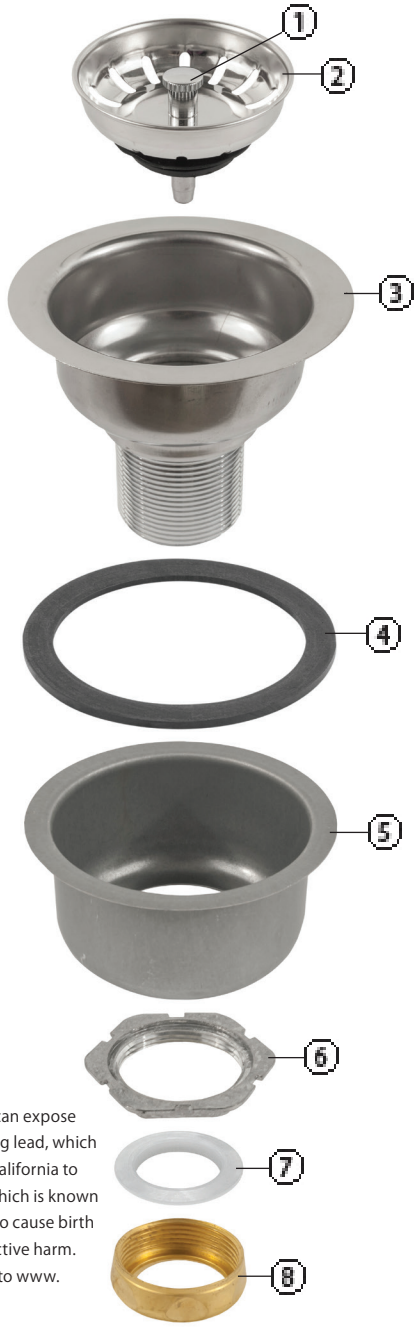

WARNING: This product can expose you to chemicals including lead, which is known to the State of California to cause cancer, and lead, which is known to the State of California to cause birth defects or other reproductive harm. For more information go to www.P65Warnings.ca.gov.

No.		Materials		
		300-006	300-008	300-017CLAM*
1	Handle	Chrome Plated Brass		
2	Strainer Basket	SS304		Brushed SS304
3	Body	Polished SS304		Brushed SS304
4	Rubber Washer	BUNA-N		
5	Cup	Galvanized Steel		
6	Lock Nut	Zinc	Brass	
7	Seal Ring	Polyethylene		
8	Tail Nut	Brass		

*Sold in a clamshell package shown above
Note: All models include friction ring

© 2018 Jomar Valve • www.jomarvalve.com • P: (586) 268-1220 • F: (586) 979-8315