Product Bulletin
New Decora® Motion Sensors

Flexible Wiring, Easy Installation and Modern Design

Leviton's line of Decora Motion Sensors provide a cost effective solution for all your residential needs. The devices offer flexible single pole or 3-way installation options, including wiring with a neutral or by using an earth ground connection, and a slim profile for ease of installation. These features make them ideal for new construction and for retrofit in older wallboxes with limited space.

With state-of-the-art technology and modern aesthetics, users will enjoy optimal management of lighting and motor loads. The sensors use passive infrared (PIR) detection technology to monitor a room for occupancy through a segmented lens. Choose from Automatic-ON (Occupancy Sensor) or Manual-ON (Vacancy Sensor) switching options. They comply with the National Electrical Code® (NEC®) and can also be used to comply with 2019 and 2022 California Title 24, Part 6 Automatic-off Controls.

Applications

Bathrooms, Garages, Hallways, Basements, Utility/ Laundry Rooms, Pantries, Walk-in Closets and Mudrooms.

Wallplate sold separately

Specifications At-A-Glance

	DOS02	DVS02	DOD05		DOS05	DVS05	DOS15	DVS15
			Fan Load	Light Load				
Voltage, frequency 120VAC, 60 Hz	•	•	•	•	•	•	•	•
Load Rating								
LED	150W	150W	300W	150W	300W	300W	600W	600W
CFL	150W	150W	300W	150W	300W	300W	600W	600W
Incandescent/Halogen	250W	250W	600W	250W	600W	600W	1800W	1800W
MLV	200VA	200VA	400VA	200VA	400VA	400VA	1200VA	1200VA
ELV	250VA	250VA	400VA	250VA	400VA	400VA	1200VA	1200VA
Fluorescent	-	-	-	-	-	-	1200VA	1200VA
Motor	-	-	1/4 hp	-	1/4 hp	1/4 hp	1/2 hp	1/2 hp
Resistive	2 Amp	2 Amp	-	2 Amp	5 Amp	5 Amp	15 Amp	15 Amp
Mechanical								
Wiring Required for Operation	Neutral or Earth ground	Neutral or Earth ground	Neutral or Earth ground		Neutral or Earth ground	Neutral or Earth ground	Neutral	Neutral
Switching Technology	Relay	Relay	Relay/Relay		Relay	Relay	Relay	Relay
Single Pole/3-Way or Single Pole	Single Pole	Single Pole	Single Pole/ Single Pole		Single Pole/ 3-Way	Single Pole/ 3-Way	Single Pole/ 3-Way	Single Pole/ 3-Way
Features								
180°, 900 Sq. Ft. Coverage	•	•	N/A	•	•	•	•	•
Passive Infrared Sensing Technology	•	•	N/A	•	•	•	•	•
Time Delay	1, 5, 10 or 20 minutes	1, 5, 10 or 20 minutes	Manual (no timer), 15, 30 and 45 minutes	1, 5, 10 or 20 minutes	1, 5, 10 or 20 minutes	1, 5, 10 or 20 minutes	1, 5, 10 or 20 minutes	1, 5, 10 or 20 minutes
Ambient Light Override	•	-	N/A	•	•	-	•	-
Auto/Manual ON	Auto ON	Manual ON	Manual ON	Auto ON	Auto ON	Manual ON	Auto ON	Manual ON
Certifications								
CSA	•	•	•	•	•	•	•	•
CA Title 24 Code Compliance	•	•	•	•	•	•	•	•
Environmental								
Operating Temperature 0°C to 40°C	•	•	•	•	•	•	•	•
Relative Humidity 0% to 95% non-condensing	•	•	•	•	•	•	•	•
Storage Temperature -20°C to 60°C	•	•	•	•	•	•	•	•

Features and Benefits

- Automatic-ON or Manual-ON models available
- Leaded terminals for easier installation
- Programmable without removing the wallplate or faceplate
- Shallow design easily fits in the wallbox
- Controls LED, CFL, Incandescent, Halogen, Magnetic Low Voltage, Electronic Low Voltage or Motor loads
- Provides 180° Field-of-View, 900 sq. ft. coverage
- Low profile design blends in with walls for a discreet appearance
- Ambient light override prevents occupancy sensors from switching the lights ON when there is ample natural sunlight
- Adjustable delayed OFF time which can be set for 1 minute, 5 minutes, 10 minutes or 20 minutes
- Adjustable Range (sensitivity) to fit various coverage areas
- Contemporary styling in line with Leviton's Decora® wiring devices
- Compatible with Decora Plus™ screwless wallplates
- Color change kits are available

DOS02, DVS02, DOS05, DVS05

- Flexible wiring can be connected to Neutral wire if Neutral is present in the wallbox or Earth ground if no Neutral wire is present in the wallbox
- Interchangeable line and load wires
- DOS05 and DVS05 are Single Pole or 3-way when used with a single pole or 3-way switch

Sensing Area Coverage

1. Horizontal Field-of-View

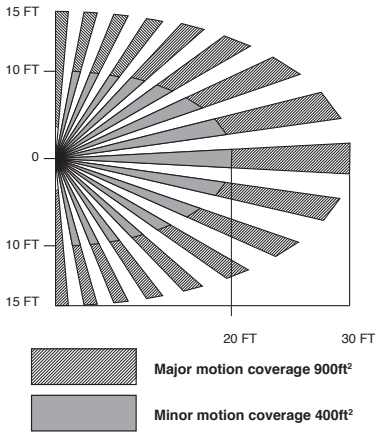

2. Vertical Field-of-View

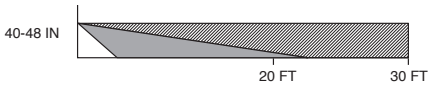

DOS15, DVS15

- Requires a Neutral wire for installation
- Single Pole or 3-way when used with a DD0SR Switch Companion, or can be used in 3-way with an additional DOS15 or DVS15 sensor

DOD05

- Flexible wiring can be connected to Neutral wire if Neutral is present in the wallbox or Earth ground if no Neutral wire is present in the wallbox
- DOD05 are Single Pole/Single Pole
- Countdown timer on fan and light loads

Typical Specifications

- Operating temperature range: 0° to 40° C
- Non-operating temperature (storage) range: -20° to 60° C
- Humidity: 0 to 95% non-condensing
- Indoor applications only

Agency Standards and Compliance

- Complies with UL773A
- NEMA WD7
- CSA C22.2 NO.205
- NOM 57
- Can be used to comply with 2019 and 2022 California Title 24, Part 6 Automatic-off Controls

Warranty Information

Five-year limited warranty

Dimensional Drawings

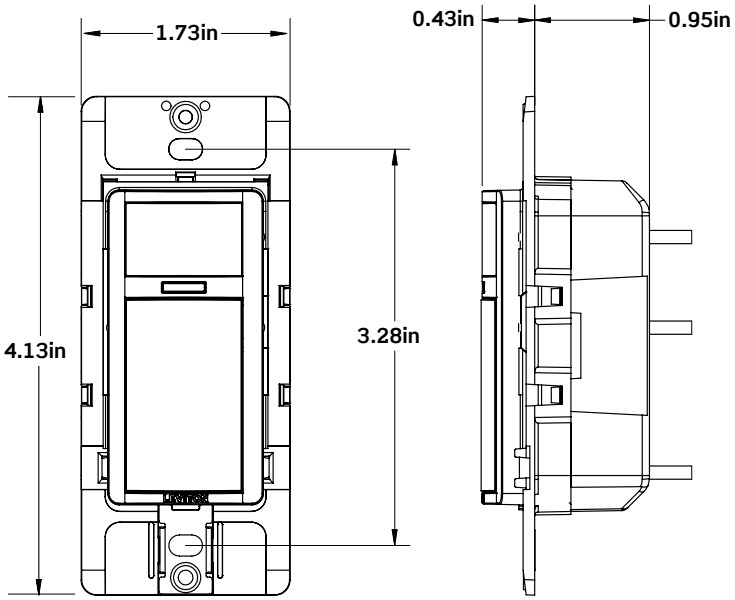

Wiring Diagrams

Cat. Nos. DOS02, DVS02, DOS05, DVS05

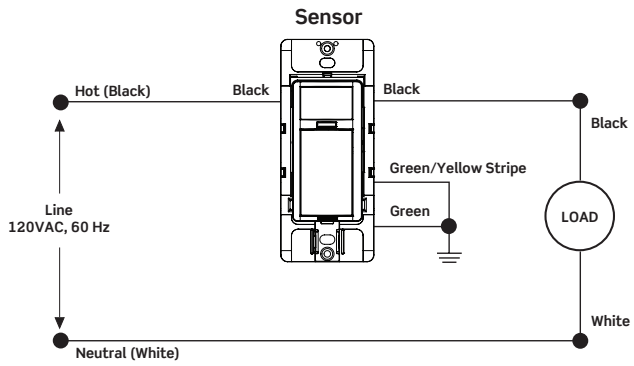

Single Pole, No Neutral Wire

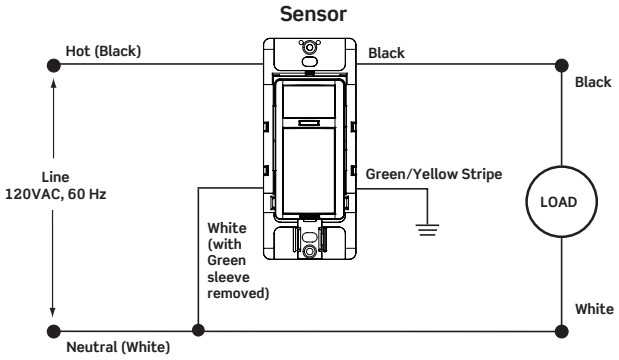

Single Pole, with Neutral Wire

Cat. Nos. DOS15, DVS15

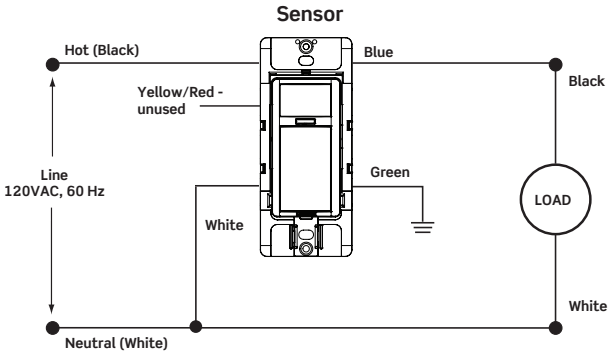

Single Pole, with Neutral Wire

Cat. No. DOD05

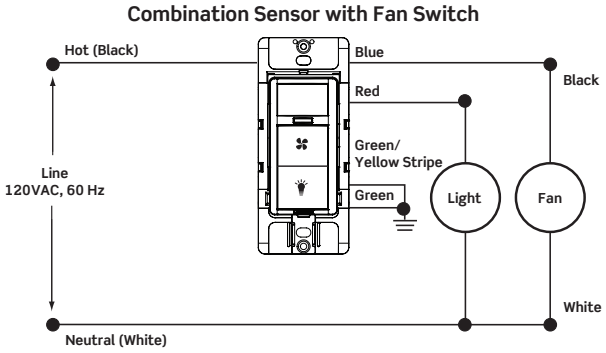

Single Pole, No Neutral Wire

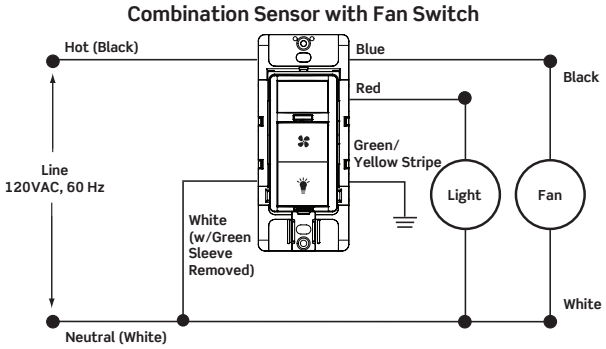

Single Pole, with Neutral Wire

Wiring Diagrams

Cat. Nos. DOS05, DVS05

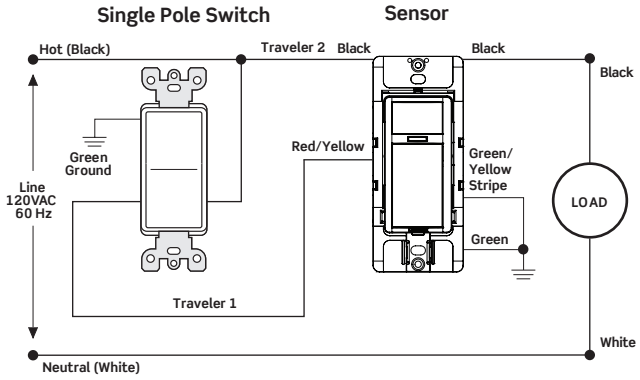

3-Way with Single Pole Switch, No Neutral Wire

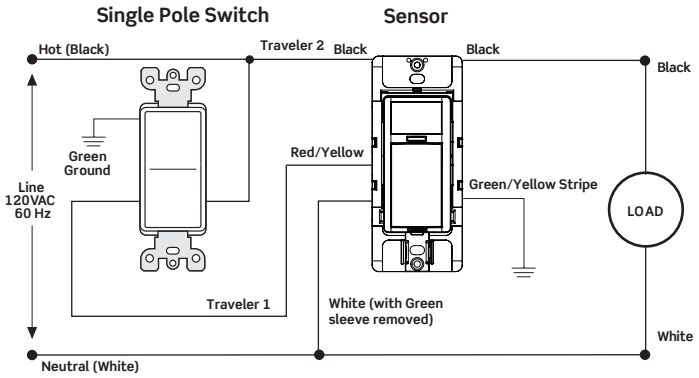

3-Way with Single Pole Switch, with Neutral Wire

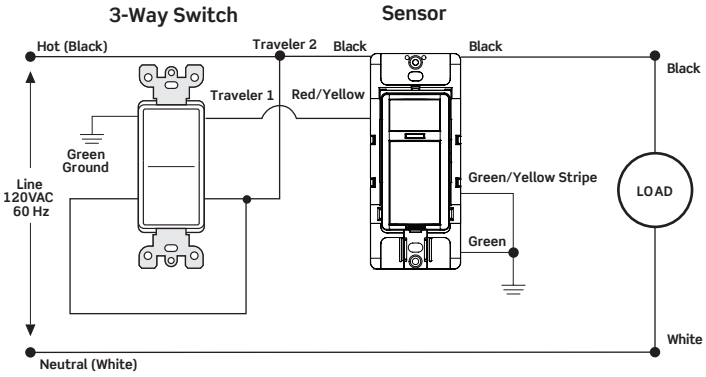

3-Way with a 3-Way Switch, No Neutral Wire

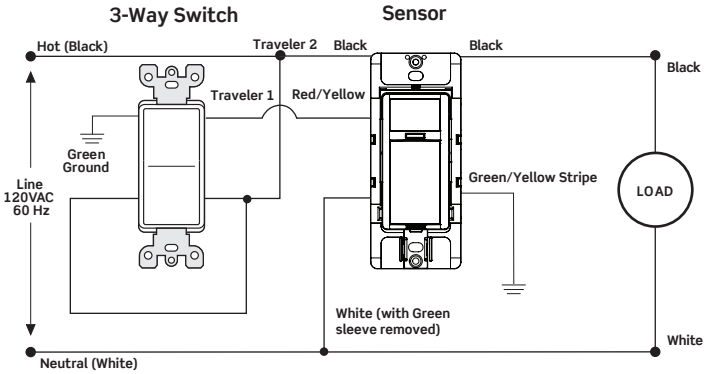

3-Way with a 3-Way Switch, with Neutral Wire

Cat. Nos. DOS15, DVS15

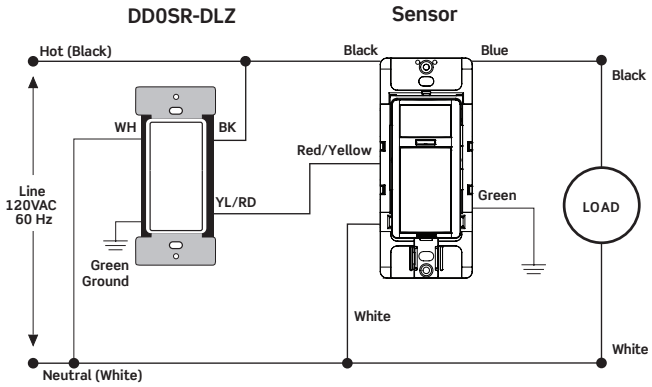

3-Way with DD0SR-DLZ Switch Companion

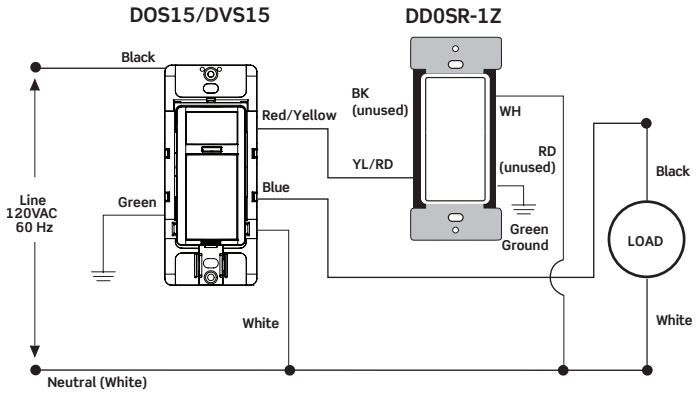

3-Way with DD0SR-1Z Switch Companion, no LED

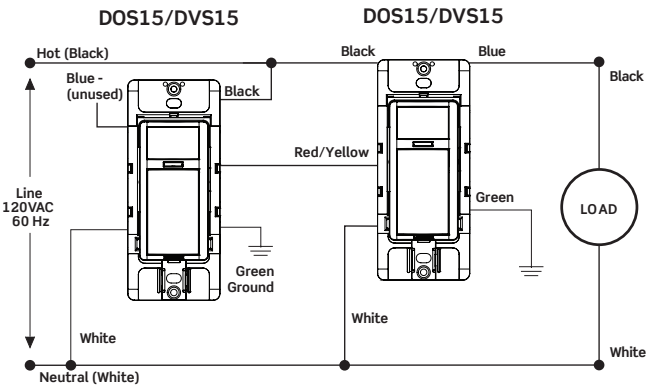

3-Way with 2 DOS15 or DVS15 Sensors

Ordering Information

Description	Rating (120VAC)	Cat. No.	Color*
Relay Occupancy Sensor, single pole, 180° Field-of-View, 900 sq. ft. coverage	150W LED/CFL, 250W Inc/Halogen, 250VA ELV, 200VA MLV, 2A Resistive	DOS02-0L	W
		DOS02-1L	I, T
Relay Vacancy Sensor, single pole 180° Field-of-View, 900 sq. ft. coverage	150W LED/CFL, 250W Inc/Halogen, 250VA ELV, 200VA MLV, 2A Resistive	DVS02-1L	W
Relay Occupancy Sensor, single pole/3-way, 180° Field-of-View, 900 sq. ft. coverage	300W LED/CFL, 600W Inc/Halogen, 400VA ELV/MLV, 1/4 HP Motor, 5A Resistive	DOS05-1L	Z
Relay Vacancy Sensor, single pole/3-way, 180° Field-of-View, 900 sq. ft. coverage	300W LED/CFL, 600W Inc/Halogen, 400VA ELV/MLV, 1/4 HP Motor, 5A Resistive	DVS05-1L	Z
Relay Occupancy Sensor, single pole/multi-sensor/multi-way, 180° Field-of-View, 900 sq. ft. coverage	600W LED/CFL,1800W Inc/Halogen, 1200VA ELV/MLV/FL, 1/2 HP Motor, 15A Resistive	DOS15-1L	Z
Relay Vacancy Sensor, single pole/multi-sensor/multi-way, 180° Field-of-View, 900 sq. ft. coverage	600W LED/CFL,1800W Inc/Halogen, 1200VA ELV/MLV/FL, 1/2 HP Motor, 15A Resistive	DVS15-1L	Z
Combination Relay Occupancy Sensor with Fan Switch, Single Pole, 180° Field-of-View, 900 sq. ft. coverage	**Fan Load (Blue Wire)** 1/4 HP Fan 300W LED/CFL 600W Inc/Halogen 400VA MLV/ELV **Light Load (Red Wire)** 150W LED/CFL 250W Inc/Halogen 200VA MLV 250VA ELV 2A Resistive	DOD05-1L	W

** To order colors, add suffix to basic Cat. No. Products with suffix (-Z) include White, Ivory and Light Almond. Other colors include: White (-W), Ivory (-I), Light Almond (-T).*

Color Change Kits

Description	Cat. No.	Color
Color Change Kits for Relay Sensors	DOSKT-00	W, I, T, G, E, B
Color Change Kits for Combination Sensors, no icons	DHDKT-00	W, I, T, G, E, B

Color change kits available in the following colors: White (-W), Ivory (-I), Light Almond (-T), Gray (-G), Black (-E), and Brown (-B).

Visit our Website at: www.leviton.com/motionsensors

© 2022 Leviton Manufacturing Co., Inc. All rights reserved.