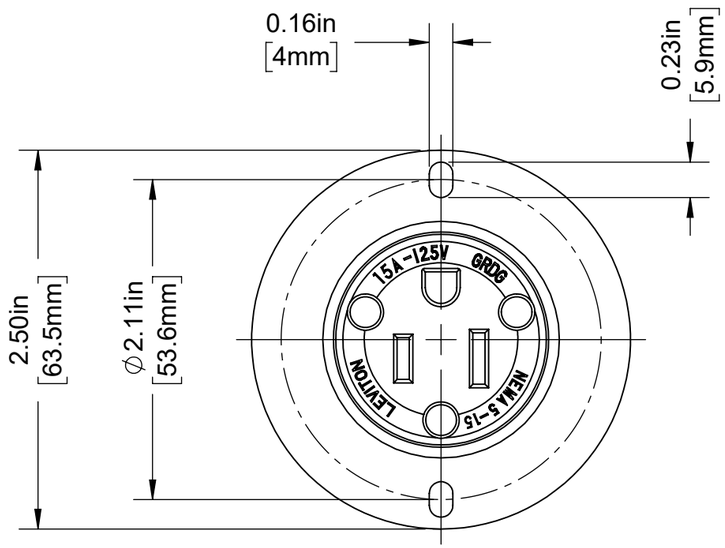

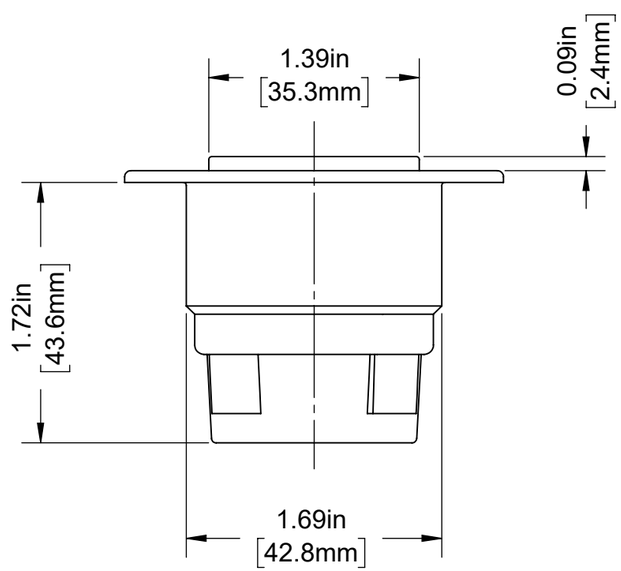

CATALOG # 5279-C

15 AMP, 125 VOLT, GROUNDING,
FLANGED OUTLET RECEPTACLE
NEMA 5-15R, 2 POLE, 3 WIRE,
STRAIGHT BLADE

UNLESS OTHERWISE SPECIFIED: DO NOT SCALE DRAWING. ALL DIMENSIONS ARE IN INCHES. ALL ANGLES ARE IN DEGREES.	LEVITON®
TOLERANCES INCH: .XX ± .01, .XXX ± .005 METRIC: .X ± .2 mm, .XX ± .1 mm	TITLE: 5279-C FLANGED OUTLET 15A NEMA 5-15 CATALOG
ANGLES: ± 1/2°	DWG NO. CATSTD-05279-00C-M01
THIRD ANGLE PROJECTION	SIZE B · SCALE:1:1 · SHEET 1 OF 1 · REV 1
ALL PRINTED COPIES ARE UNCONTROLLED	

Copyright 2020. Unpublished. All Rights Reserved.