Provolt™ Series Multi-Technology (M/T) Occupancy Sensors

Light Pipe

Description

The Leviton Provolt™ Series combines line voltage occupancy sensors and photocells into a self-contained unit. The integrated design alleviates the need for separate power pack and occupancy sensor wiring making it a low-cost, efficient energy solution for new construction and retrofits. For true daylight harvesting applications, integrated photocells provide consistent daylight design levels by actively switching the connected load(s) ON and OFF in response to available natural light to maximize energy savings. Vacancy timers continually analyze and adjust to changing conditions using the latest microprocessor based technology to optimize performance. Auto-ON/auto-OFF automatically turns lights ON and keeps them ON when occupancy is detected and automatically turns lights OFF when the space is vacant or unoccupied. Wire terminals allow for simple connection to a line-voltage circuit and are ideal for existing buildings with limited access to wiring and new construction.

Applications

- Can be used to comply with IECC, ASHRAE 90.1 and 2019 Title 24, Part 6 occupancy/vacancy sensing, automatic shut off and daylight harvesting requirements
- Auto-ON/Auto-OFF
- Manual-ON/Auto-OFF

Features

- Sensors combine both PIR and U/S technology for unrivaled performance and reliability
- Sensors use PIR technology to initially turn lights ON, and use U/S technology to keep the lights ON. Exclusive false-detection software assures lights are ON only when needed.
- Auto-adapting: time delay and sensitivity are continually adjusted to occupancy pattern of use

Features, cont'd

- Configurable for manual-ON/auto-OFF or auto-ON/auto-OFF
- Vacancy Sensing Time Outs:
  - Delayed OFF timer: the sensor will turn lights OFF if no motion is detected after a specified time
  - Exclusive walk-through feature: provides increased energy savings by not leaving the lights ON for an extended period after only momentary occupancy
  - False Detection Timer: (M/T) the PIR scans for movement and shuts lights off after 31 minutes preventing false triggers from HVAC systems
- Time delay and saved settings are protected during power outages and will return to the last known state
- Output short circuit protection
- Industry-exclusive self-configuring local manual switch input: momentary or maintained switches are supported
- Presentation mode feature for slide or film presentations allows push buttons to turn lights OFF and keep them OFF while the room is occupied
- Adjustable time delay: 30S, 5min, 10min, 20min, 30min
- Test mode for simplified commissioning
- Manual switch and emergency override are Class 1 and Class 2 circuits. Class 2 circuits provided for flexibility
- Industry-exclusive "fail-safe" circuitry: in the event of product failure, return-to-closed feature causes the relay to default ON which eliminates life safety concerns
- Non-volatile memory: after power loss, product returns to last state
- Industry-exclusive H.I.S. (High Inrush Stability) technology designed to handle today's high inrush electronic ballast loads and offer unmatched durability and service
- Robust and reliable mechanically held 8A latching relay provides dependability and robust performance for all load types and provides energy savings over electronically held relays

Leviton Manufacturing Co., Inc. Global Headquarters
201 North Service Road, Melville, NY 11747-3138 **tel** 800-323-8920 **tech line** (8:30AM-7:00PM ET Mon-Fri) 800-824-3005
©2021 Leviton Manufacturing Co., Inc. All rights reserved. Subject to change without notice.

Product Data
ODCxx-MDW

Features
- Field of view: units from 500 to 2,000 square feet available
- Lenses are easily replaceable and color-coded—red (mid-range) and black (extended range) for contractors and end-users to easily identify lenses from the ground
- Visual LED indicators for all states:
  - Red—blinks when infrared is detecting motion and during photocell manual calibration; solid during device malfunction
  - Green—blinks when U/S is detected; solid during auto calibration
  - Yellow—blinks during test mode; solid with emergency/BMS input

Ratings & Testing
- Zero-crossing circuitry for extended life of the relay
- Tested to exceed 1 million switching cycles under standard loads
- Multiple compliance and regulatory UL testing—consult factory for details
- Passed rigorous NEMA 410 testing for electronic ballast rating
- BMS Input/Emergency Override: UL 924 listed for emergency and egress lighting control
- Meets Energy Star® requirements for multi-techs and ultrasonics

Photocell Operation
Open Loop - Angled Light Pipe

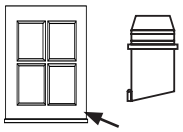

Note: Long side of angled light pipe must face toward natural light source (window)

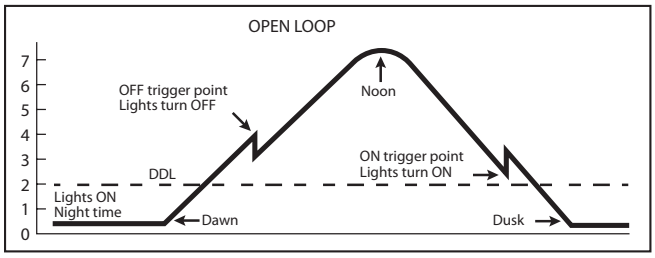

Closed Loop - Flat Light Pipe

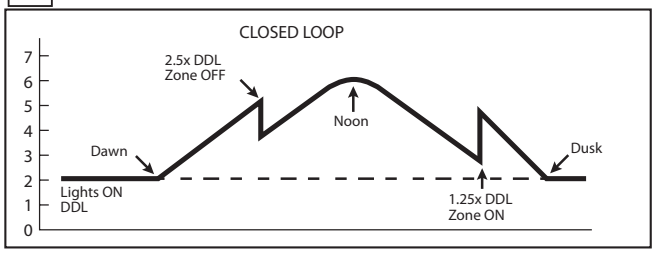

Photocell Features
- Daylight harvesting applications:
  - Auto calibration (automatic daylight calibration): photocell intelligently measures light levels to determine optimal daylight design levels for closed loop applications
  - Closed Loop: photocell detects total photometric light from daylight or electric sources in the space
  - Open Loop: photocell detects daylight or electric light only; requires manual calibration
- Adjustable daylight design levels: Normal (OFF), Manual (ON/OFF) and Auto Calibration
- Blue blinking light indicates photocell override
- Integrated photocell tested to less than 1 Fc accuracy
- Open and closed loop photocell included

Installation
- Easy installation into junction boxes with Leviton-exclusive screw guides, coasters and terminal blocks
- Front cover snaps on and off for ease of installation

Photocell Placement*
Open Loop Application - Angled Light Pipe

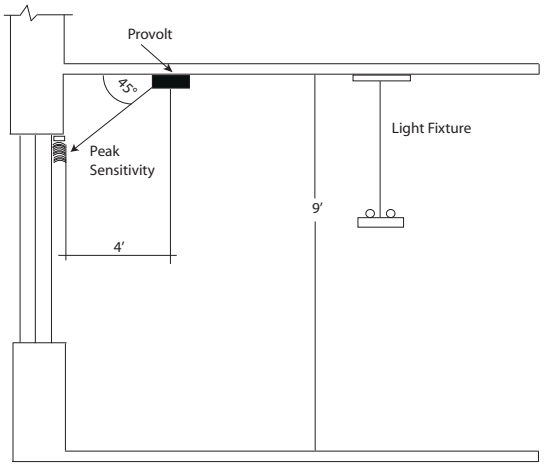

Closed Loop Application - Flat Light Pipe

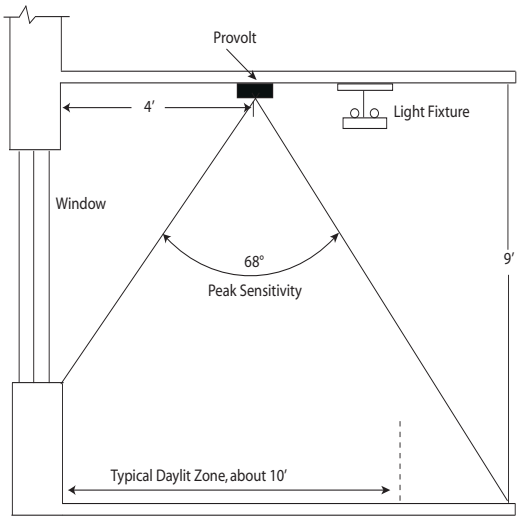

*May require more than one occupancy sensor for total room coverage

Field of View Diagrams

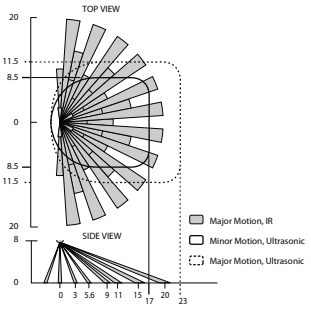

ODC05-MDW
(High Density Lens - Blue)

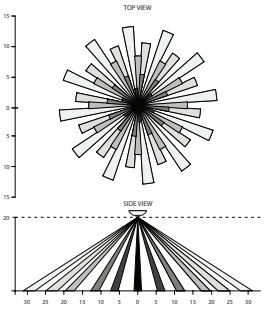

Mid-Range Lens
(Included with all PIR
and Multi-Tech Models)

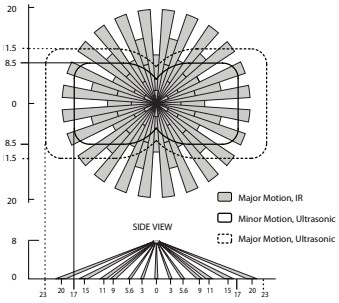

ODC10-MDW
(Extended Range Lens - Black)

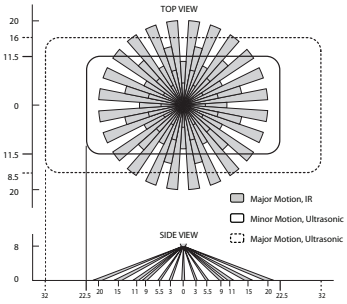

ODC20-MDW
(Extended Range Lens - Black)

Dimensions Diagrams

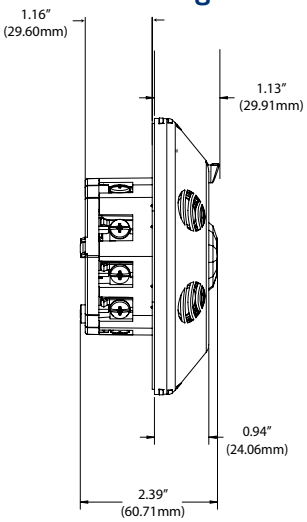

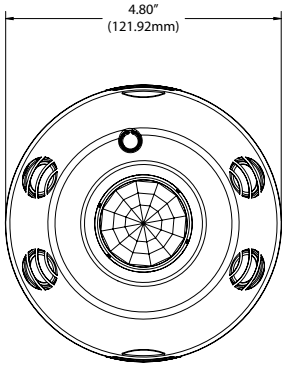

Installation Diagram

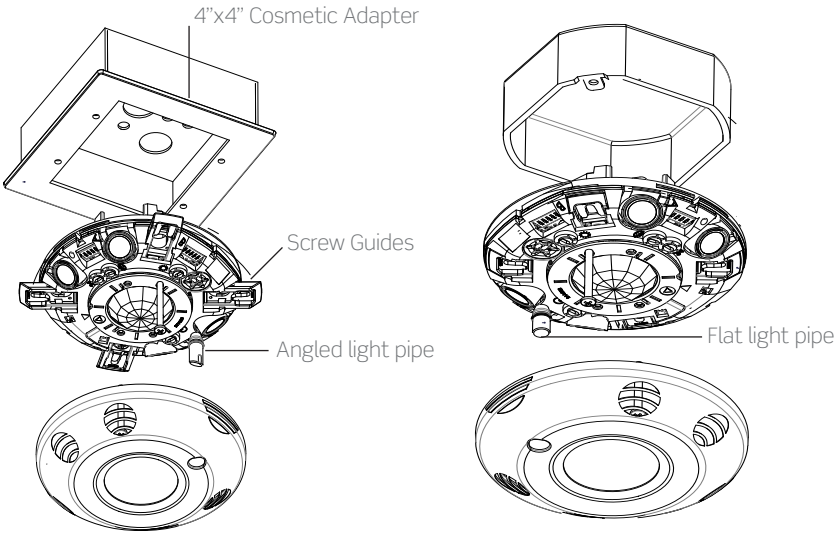

Sensors conveniently mount to a standard 4" x 4" square or octagon electrical box per NEC standards

Leviton Manufacturing Co., Inc. Global Headquarters
201 North Service Road, Melville, NY 11747-3138 **tel** 800-323-8920 **tech line** (8:30AM-7:00PM ET Mon-Fri) 800-824-3005
©2021 Leviton Manufacturing Co., Inc. All rights reserved. Subject to change without notice.

Specifications

Electrical			
Input Voltage	120V, 50/60Hz	230V, 50Hz	277V, 50/60Hz
Load Rating	8A, Electronic Ballast, 800W/VA, Tungsten, Ballast, 1/4 HP Motor	6A/6AX, Electronic Ballast, Magnetic Ballast, 1200W/VA, 1/3 HP Motor	5A, Electronic Ballast, 1200VA, 1/3 HP Motor
Current Consumption	60-30ma		
Environmental			
Operating Temperature	32 to 104° F (0 to 40° C)		
Storage Temperature	-15 to 160° F (-26 to 71° C)		
Relative Humidity	0-90% non-condensing		
Other			
Energy Codes	Can be used to comply with IECC, ASHRAE 90.1 and 2019 Title 24, Part 6 occupancy/vacancy sensing, automatic shut off and daylight harvesting requirements		
Listings	UL 773A (Occupancy Standard), UL 924 (Emergency Equipment), cUL listed, CE compliant, NOM certified, RoHS compliant, NY LLC48 compliant		
Warrant	5-Year Limited		

Ordering Information

Product Name	
Cat. No.	**Description**
ODC05-MDW	Line Voltage, Ceiling, M/T Sensor 500sqft, 120-277V, extended range Lens installed, open and closed loop photocell included, can be used to comply with IECC, ASHRAE 90.1 and 2019 Title 24, Part 6 occupancy/vacancy sensing, automatic shut off and daylight harvesting requirements
ODC10-MDW	Line Voltage, Ceiling, M/T Sensor 1,000sqft, 120-277V, extended range lens installed, mid-range included, open and closed loop photocell included, can be used to comply with IECC, ASHRAE 90.1 and 2019 Title 24, Part 6 occupancy/vacancy sensing, automatic shut off and daylight harvesting requirements
ODC20-MDW	Line Voltage, Ceiling, M/T Sensor, 2,000sqft, 120-277V, extended range lens installed, mid-range included, open and closed loop photocell included, can be used to comply with IECC, ASHRAE 90.1 and 2019 Title 24, Part 6 occupancy/vacancy sensing, automatic shut off and daylight harvesting requirements

Leviton Manufacturing Co., Inc. Lighting & Controls
20497 SW Teton Avenue, Tualatin, OR 97062 **tel** 800-736-6682 **tech line** (6:00AM-4:00PM PT Mon-Fri) 800-959-6004

Leviton Manufacturing Co., Inc. Global Headquarters
201 North Service Road, Melville, NY 11747-3138 **tel** 800-323-8920 **tech line** (8:30AM-7:00PM ET Mon-Fri) 800-824-3005

Visit our Website at: www.leviton.com/provolt
©2021 Leviton Manufacturing Co., Inc. All rights reserved. Subject to change without notice.

G-9127D/D21-aa
REV APR 2021