Project		Catalog #		Type	
Prepared by		Notes		Date	

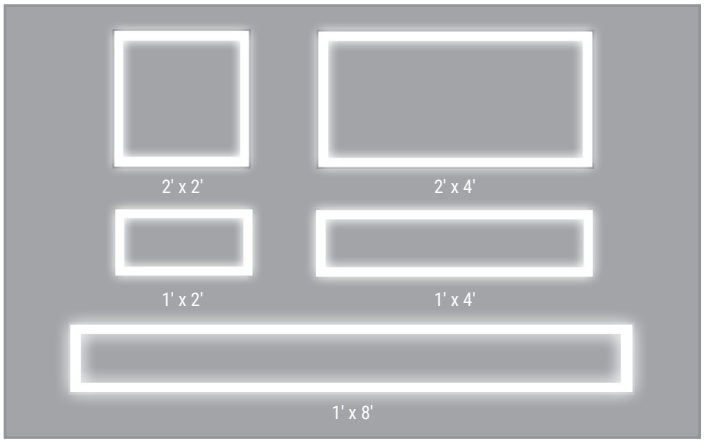

Metalux

Surround

1x2 / 1x4 / 2x2 / 2x4 / 1x8
Selectable Drop Lens LED

Typical Applications

• Commercial Office Spaces • Schools • Healthcare • Retail Merchandising Areas

Interactive Menu

- Order Information and Performance Data page 2
- Product Specifications page 3
- Photometric Data page 4
- Product Warranty

Product Certification

Product Features

Top Product Features

- Wire routing enables ACT tile install with no cutting required
- Available in 1' x 2', 1' x 4', 2' x 2', 2' x 4' and 1' x 8'
- Versatile mounting: allows for mounting in existing T-grid or suspension with additional kit
- Selectable lumen output: 1,500-8,500
- 4 selectable CCT in 80 CRI: 3000K, 3500K, 4000K, 5000K
- One piece luminaire with no assembly required. Simply wire to driver and plug in the low-voltage cable.
- Selectable switches are located outside the junction box, for quick adjustment before and after installation
- Standard 0-10V continuous dimming to 5%
- Visually comforting 1.5" wide lens with inner prisms to reduce glare and deliver options as low as 16.3 UGR

Dimensional and Mounting Details

additional product diagrams

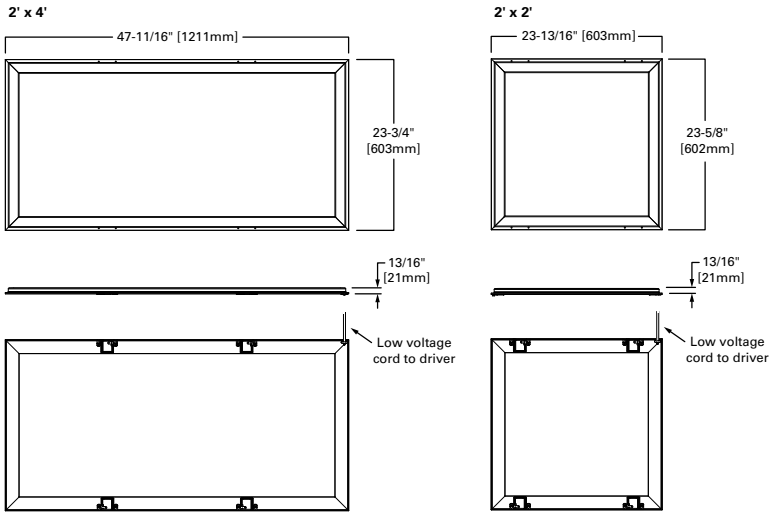

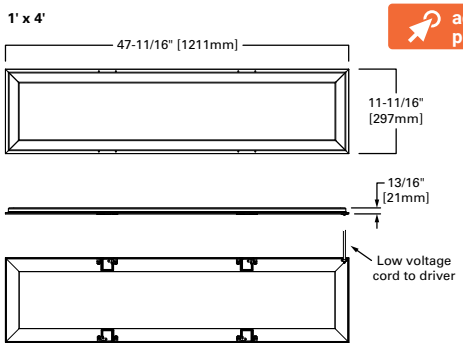

Ceiling Compatibility

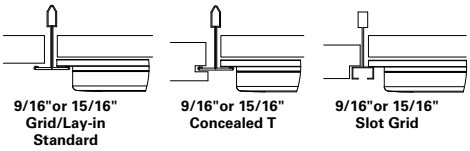

Order Information and Performance Data

Default CCT/Lumen Setting: 4000K / Med Power

Size	Catalog	Lumen Setting	CCT	CRI (Min)	Delivered Nominal Lumens	Watts	Efficacy (lm/W)	Glare Performance	
								UGR (1)	Max Luminance (1)
1x2	12SFS-L3C4-UNV	Low	3000K	80	1528	12	131	26.2	2454
			3500K	80	1539	12	133	26.2	2472
			4000K	80	1555	12	134	26.3	2497
			5000K	80	1572	12	136	26.3	2525
		Medium	3000K	80	2533	20	130	28.0	4068
			3500K	80	2552	20	131	28.0	4098
			4000K	80	2578	20	133	28.0	4140
			5000K	80	2616	20	135	28.1	4201
		High	3000K	80	3510	28	127	29.1	5637
			3500K	80	3516	28	128	29.1	5647
			4000K	80	3550	28	129	29.1	5701
			5000K	80	3611	28	131	29.2	5799
1x4	14SFS-L3C4-UNV	Low	3000K	80	1915	15	130	21.4	1735
			3500K	80	1934	15	132	21.5	1752
			4000K	80	1930	15	134	21.5	1748
			5000K	80	1975	15	136	21.5	1789
		Medium	3000K	80	3171	25	129	23.2	2872
			3500K	80	3199	25	130	23.2	2898
			4000K	80	3237	25	133	23.3	2932
			5000K	80	3294	25	134	23.3	2984
		High	3000K	80	4447	36	126	24.4	4028
			3500K	80	4517	36	128	24.4	4091
			4000K	80	4583	36	129	24.5	4151
			5000K	80	4641	36	132	24.5	4204
1x8	18SFS-L3C4-UNV	Low	3000K	80	4460	31	145	22.0	1952
			3500K	80	4504	31	146	22.1	1971
			4000K	80	4549	31	147	22.1	1991
			5000K	80	4584	31	149	22.1	2006
		Medium	3000K	80	6373	45	143	23.3	2789
			3500K	80	6443	45	145	23.3	2820
			4000K	80	6514	45	146	23.4	2851
			5000K	80	6565	45	147	23.4	2873
		High	3000K	80	8399	60	141	24.2	3676
			3500K	80	8436	60	142	24.3	3692
			4000K	80	8536	60	143	24.3	3736
			5000K	80	8547	60	145	24.3	3741

Notes:
(1) UGR values per CIE 190:2010 with 4H, 8H, Reflectance: 70% Ceiling, 50% Wall, 20% Ref. Plane.

Luminance measured at 45-90 degrees from nadir.

UGR and Luminance values that meet WELL v2 L04 requirements for Managing Glare are shown with green highlighted cell (UGR < 16, Luminance < 6,000).

UGR and Luminance values that meet LEED v4.1 requirements for Glare Control are shown with green text (UGR < 19, Luminance < 7,000).

Key

	Meets WELL v2
TEXT	Meets LEED v4.1

Order Information and Performance Data

Default CCT/Lumen Setting: 4000K / Med Power

Size	Catalog	Lumen Setting	CCT	CRI (Min)	Delivered Nominal Lumens	Watts	Efficacy (lm/W)	Glare Performance	
								UGR (1)	Max Luminance (1)
2x2	22SFS-L3C4-UNV	Low	3000K	80	1902	15	131	21.1	1583
			3500K	80	1911	15	132	21.1	1591
			4000K	80	1933	15	133	21.1	1609
			5000K	80	1952	15	135	21.1	1625
		Medium	3000K	80	3173	25	129	22.8	2641
			3500K	80	3205	25	130	22.9	2668
			4000K	80	3244	25	132	22.9	2700
			5000K	80	3288	25	133	23.0	2737
		High	3000K	80	4445	36	125	24.0	3700
			3500K	80	4482	36	126	24.0	3731
			4000K	80	4552	36	128	24.1	3789
			5000K	80	4626	36	131	24.1	3851
2x4	24SFS-L3C4-UNV	Low	3000K	80	2986	23	130	20.2	1312
			3500K	80	3011	23	132	20.2	1323
			4000K	80	3045	23	133	20.3	1338
			5000K	80	3074	23	135	20.3	1351
		Medium	3000K	80	4422	35	129	21.6	1943
			3500K	80	4472	35	130	21.6	1965
			4000K	80	4512	35	132	21.6	1982
			5000K	80	4571	35	134	21.7	2008
		High	3000K	80	5847	47	126	22.5	2569
			3500K	80	5924	47	127	22.6	2603
			4000K	80	6007	47	129	22.6	2639
			5000K	80	6131	47	131	22.7	2694

Notes:
(1) UGR values per CIE 190:2010 with 4H, 8H, Reflectance: 70% Ceiling, 50% Wall, 20% Ref. Plane.
Luminance measured at 45-90 degrees from nadir.
UGR and Luminance values that meet WELL v2 L04 requirements for Managing Glare are shown with green highlighted cell (UGR < 16, Luminance < 6,000).
UGR and Luminance values that meet LEED v4.1 requirements for Glare Control are shown with green text (UGR < 19, Luminance < 7,000).

Key

	Meets WELL v2
TEXT	Meets LEED v4.1

TM-30 DATA FOR 80 CRI, SELECTABLE CCT (3000K SETTING)

ANSI/IES TM-30-18 Color Rendition Report

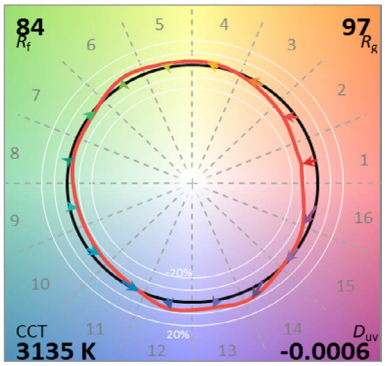

Reference Illuminant — Test Source

TM-30 DATA FOR 80 CRI, SELECTABLE CCT (3500K SETTING)

ANSI/IES TM-30-18 Color Rendition Report

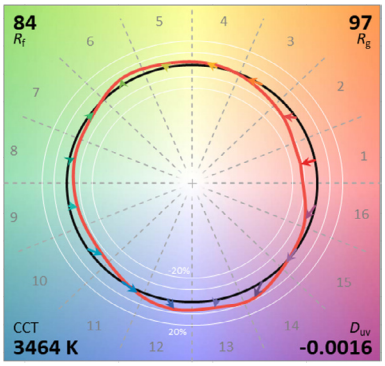

Reference Illuminant — Test Source

TM-30 DATA FOR 80 CRI, SELECTABLE CCT (4000K SETTING)

ANSI/IES TM-30-18 Color Rendition Report

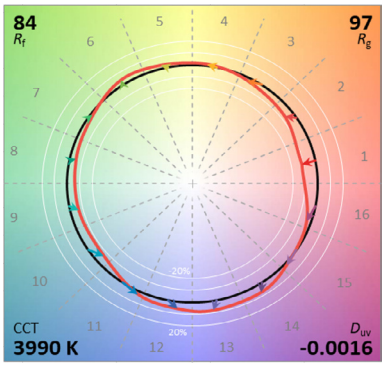

Reference Illuminant — Test Source

TM-30 DATA FOR 80 CRI, SELECTABLE CCT (5000K SETTING)

ANSI/IES TM-30-18 Color Rendition Report

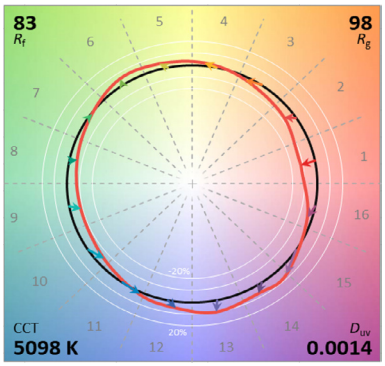

Reference Illuminant — Test Source

TM-30 data is extrapolated from LM-79 integrating sphere tests. Contact factory for specific TM-30 data.

CRI	CCT	CRI	R_f	R_g	R9
80	3000K	82	84	97	5
	3500K	83	84	97	10
	4000K	84	84	97	14
	5000K	83	83	98	10

Surround Accessories (Order as a separate line item)

Catalog	Description	UPC	Notes
EBPLED7W	7W EM Pack	080083289844	Field Installed
EBPLED14W	14W EM Pack	080083289868	Field Installed
WTA	WaveLinx PRO Wireless Tilemount Kits	080083174492	Field Installed
WTK	WaveLinx LITE Wireless Tilemount Kits	080083293261	Field Installed
FPSUS24	2-point Y-hanger suspension kit includes aircraft cable, carabiner, ceiling connection, SO cord, cord connectors, round 4" J-box cover plate. Mounting height from ceiling: **Min**.=7-1/4" [184mm] **Max**.=27" [286mm]	080083258895	Field Installed

*Emergency + Sensor Available (EL7W/EL14W + WTA/WTK)

Catalog	Size	UGR		
		High Lumen	Med Lumen	Low Lumen
12SFS-L3C4-UNV	1x2	26.8	25.7	23.9
14SFS-L3C4-UNV	1x4	21.7	20.5	18.8
18SFS-L3C4-UNV	1x8	21.2	20.3	19
22SFS-L3C4-UNV	2x2	19.3	18.1	16.3
24SFS-L3C4-UNV	2x4	20.5	19.6	18.2

Product Hanging Weight Data

Catalog	Size	Weight (lb.)
12SFS-L3C4-UNV	1x2	1.5
14SFS-L3C4-UNV	1x4	2.6
18SFS-L3C4-UNV	1x8	5.1
22SFS-L3C4-UNV	2x2	2.1
24SFS-L3C4-UNV	2x4	3.2

All product weights in this table do not include the weight of the remote driver. This data is displaying suspension hanging weights only.

Product Specifications

Construction
- One piece, out of the box, construction with no assembly required
- Lightweight aluminum frame provides rigidity in lay-in or suspension mounting
- Remote steel driver enclosure with integrated T-grid clip for easy mounting
- Standard polycarbonate lens with seamless miter corner
- Four auxiliary fixture end suspension points provided
- Total fixture height is less than 1 inch - ideal for shallow plenum applications
- Driver is 3.5 x 7.5 x 1.5 inches and snaps onto the grid with a 3 foot cord to enable easy installation in constrained spaces

Optical Shielding
- Frosted ribbed lens with innovative inner faceting provides uniform illumination and glare as low as 16.3 UGR
- Polycarbonate lens minimizes scratches and adds impact resistance

LED and Light Engine
- LED's are ≥80 CRI with life at max output L88 @60,000 hours based on TM21 standards
- Selectable CCT with switch on the driver - Four options: 3000K, 3500K, 4000K, 5000K
- Lumen select switch provides three lumen package choices: High, Medium, Low

Installation
- **Lightweight!** All fixture types are less than 5.1 lbs.
- Installed on T-grid, while the remote driver is mounted above the ceiling using a pre-installed grid clip
- Complete the install by resting the original ceiling tile back on top of the luminaire
- Secure luminaire with integrated T-grid clips where desired
- Luminaire can be suspended mount using FPSUS24 accessory kits (sold separately)
- Alternate suspension options from others may be used. Maximum suspension is 6 feet from driver. See instructions for details.

Electrical
- 120-277V electronic driver, FCC part 15 Class B rating. May be used in residential and commercial spaces
- Standard 0-10V dimming to 5%
- 0-10V dimming uses low-voltage pink and purple wire leads
- Both driver box and fixture have a 3' cord length, when connected cord length is approximately 6'
- Default CCT/Lumen setting is 4000K and medium power
- Large junction box with 4 KO is suitable for wiring sensors, emergency backup and other control devices

Compliance
- UL/cUL listed for damp location
- Rated for -4°F (-20°C) to 104°F (40°C) ambient operating temperatures
- State of California Title 24 high efficacy non-residential luminaire
- RoHS compliant
- DesignLights Consortium Qualified, refer to www.designlights.org for details

Warranty
- Five year limited warranty

Photometric Data

View IES files

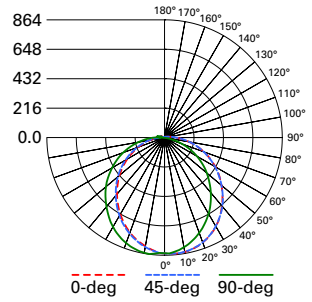

12SFS-L3C4-UNV-MED-3500K
Electronic Driver
LED 3500K
Spacing criterion: (II) 1.22 x mounting height, (⊥) 1.24 x mounting height
Lumens: 2552
Input Watts: 20W
Efficacy: 127.6 LPW
Test Report: 12SFS-L3C4-UNV-MED-3500K.IES

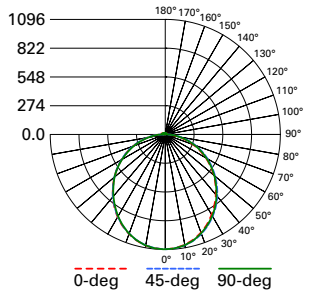

14SFS-L3C4-UNV-MED-3500K
Electronic Driver
LED 3500K
Spacing criterion: (II) 1.22 x mounting height, (⊥) 1.22 x mounting height
Lumens: 3199
Input Watts: 25W
Efficacy: 128 LPW
Test Report: 14SFS-L3C4-UNV-MED-3500K.IES

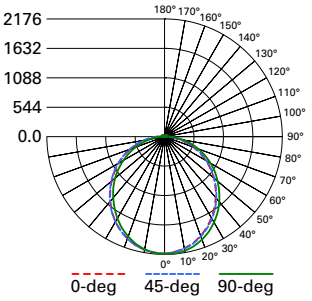

18SFS-L3C4-UNV-MED-3500K
Electronic Driver
LED 3500K
Spacing criterion: (II) 1.22 x mounting height, (⊥) 1.23 x mounting height
Lumens: 6443
Input Watts: 45W
Efficacy: 143.2 LPW
Test Report: 18SFS-L3C4-UNV-MED-3500K.IES

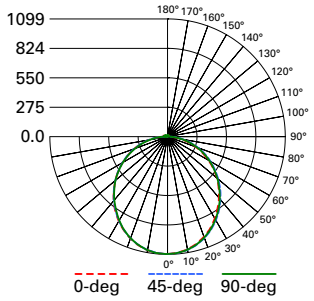

22SFS-L3C4-UNV-MED-3500K
Electronic Driver
LED 3500K
Spacing criterion: (II) 1.22 x mounting height, (⊥) 1.22 x mounting height
Lumens: 3205
Input Watts: 25W
Efficacy: 128.2 LPW
Test Report: 22SFS-L3C4-UNV-MED-3500K.IES

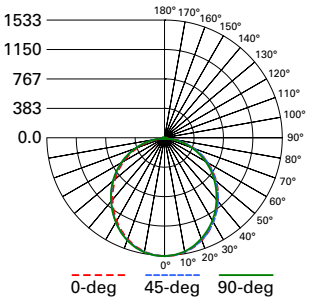

24SFS-L3C4-UNV-MED-3500K
Electronic Driver
LED 3500K
Spacing criterion: (II) 1.22 x mounting height, (⊥) 1.22 x mounting height
Lumens: 4472
Input Watts: 35W
Efficacy: 127.8 LPW
Test Report: 24SFS-L3C4-UNV-MED-3500K.IES

Dimensional and Mounting Details

2' x 4'

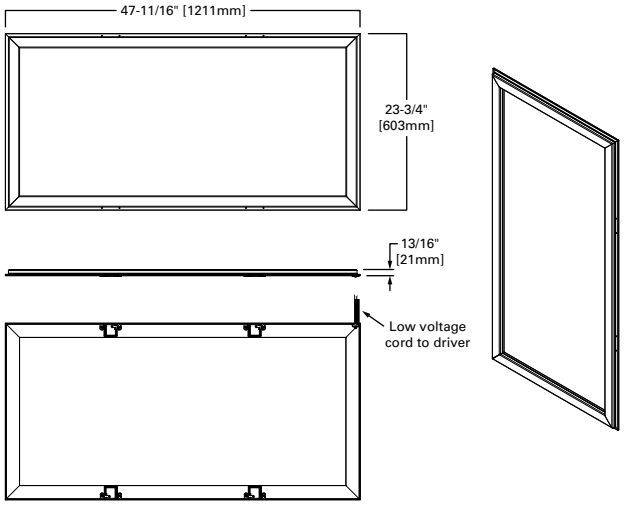

1' x 4'

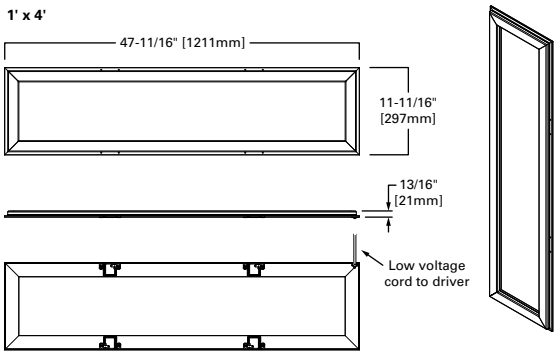

1' x 2'

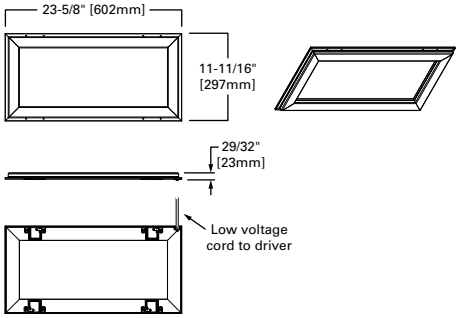

2' x 2'

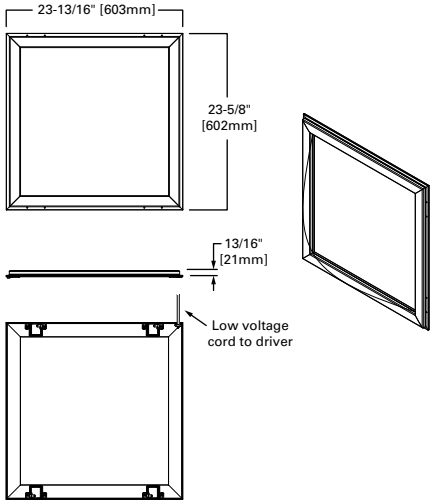

1' x 8'

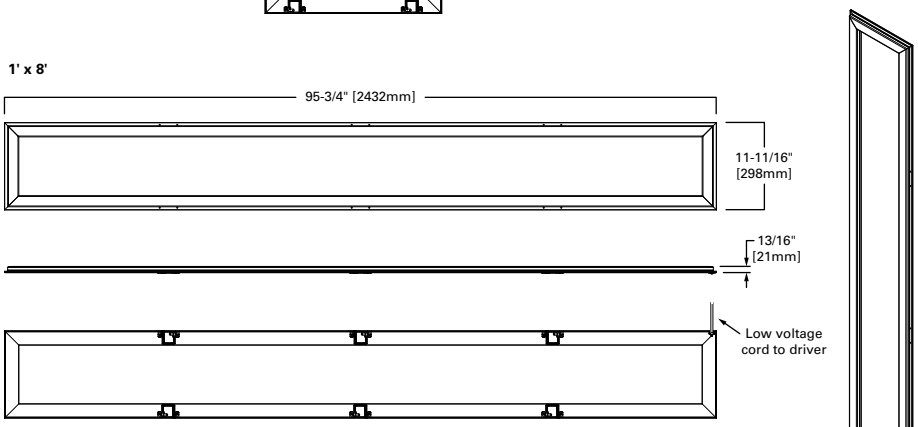

1' x 8' Remote Driver

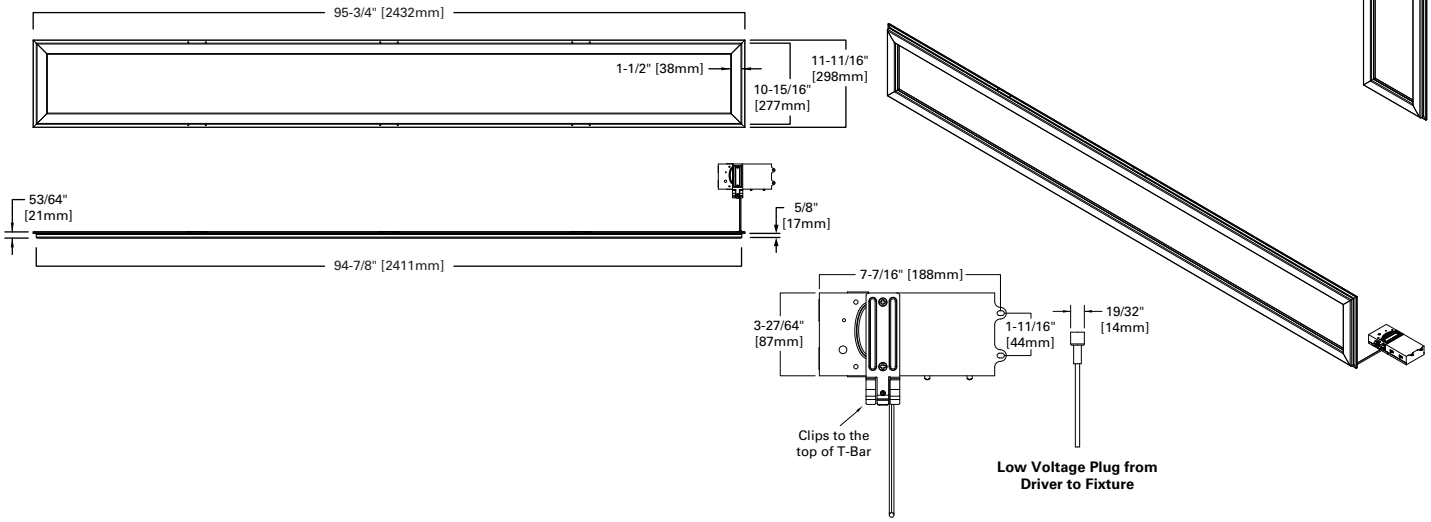

Cooper Lighting Solutions
1121 Highway 74 South
Peachtree City, GA 30269
P: 770-486-4800
www.cooperlighting.com

© 2025 Cooper Lighting Solutions
All Rights Reserved.

Specifications and dimensions subject to change without notice.