Project		Catalog #		Type	
Prepared by		Notes		Date	

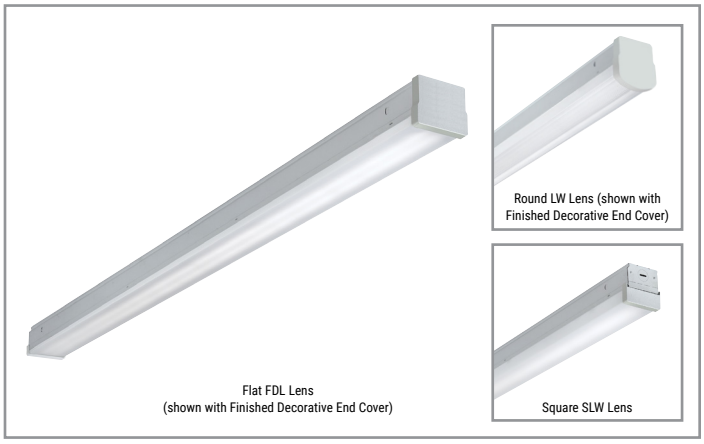

Metalux

SNX Lensed

Flat, Round and Square Lens
Linear LED Striplight

Typical Applications

Commercial • Cove • Warehouse/Distribution • Retail • Industrial • General Aisle or Open Areas • Utility/Storage Rooms

Interactive Menu

- Order Information page 2
- Photometrics page 4
- Energy and Performance Data page 5
- Control Solutions page 10
- Product Warranty

Product Certification

Product Features

Top Product Features

- Standard (SL) and High lumen/High Efficacy (HL) packages
- Three (3) CCT and Lumen selectable options available
- Up to 21,000 lumen and 174 LPW
- General, Narrow or Wide distributions
- Decorative end cover and multiple finishes provide a polished look
- Integral factory installed controls option allows more energy savings
- Captive lens, electrical, and channel cover assembly
- Tool-less channel cover and electrical assembly
- Options to meet Build America, Buy America, Buy American and other domestic preference requirements

Dimensional Details

End View - Round Lens

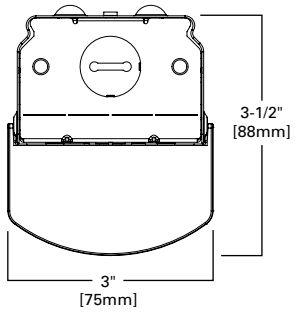

End View - Square Lens

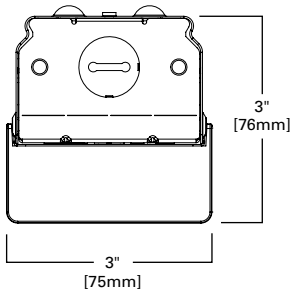

End View - Flat Lens

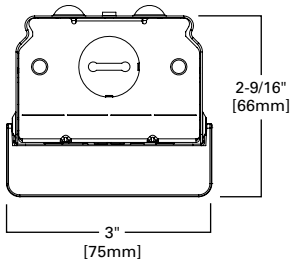

Finished Decorative End Covers

End View - Round Lens

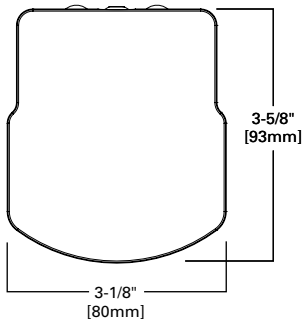

additional product diagrams

Order Information

SAMPLE ORDER NUMBERS: **4SNX-48SL-LN-UNV-L835-CD1-U or 8TSNX-180HL-SLW-UNV-EL7W-L840-CD2-U**

Domestic Preferences [1]	Length			Series
[Blank]=Standard **BAA**=Buy American Act **TAA**=Trade Agreements Act **BABA**=Build America Buy America Act	**2**=2 ft.	**4**=4 ft.	**8T**=8 ft.	**SNX**=Commercial LED Striplight [2]

Standard Nominal Lumen Packages [3]

2 ft	4 ft		8 ft	
SL3 [25]	SL3 [25]	60SL	SL3 [5], [25]	114SL [5]
19SL	20SL	63SL	40SL	120SL [5]
23SL	22SL	67SL	44SL	126SL [5]
25SL	26SL	74HL	52SL	134SL [5]
30SL	31SL	81HL	62SL	148HL [5]
40HL	33SL	84HL	66SL	162HL [5]
44HL	37SL	87HL	74SL	168HL [5]
47HL	41SL	90HL	82SL	174HL [5]
	45SL	93HL	90SL	180HL [5]
	48SL	100HL	96SL	186HL [5]
	51SL	104HL	102SL [5]	200HL [5]
	57SL			

SL denotes standard lumen output. HL denotes high lumen output. Additional LEDs to obtain lumen package.

SL3=Low/Med/High output (see performance table for lumen package).

Lens

Round
LC=Clear Lens
LN=Semi-Frost Lens - Narrow
LW=Full Frost Lens - Wide

Square
SLW=Square / Frost Lens - Wide

Flat
FDL=Flat Frost / Diffuse Lens

Voltage [4]

UNV=Universal Voltage 120-277
347=347V
480=480V [9]

Color Temp / CCT

CCT Select [6], [25]
CC83=Switchable CCT, 80CRI, 35/4/5000K
CC93=Switchable CCT, 90CRI 35/4/5000K

CCT/CRI
L830=3000K, 80 CRI
L835=3500K, 80 CRI
L840=4000K, 80 CRI
L850=5000K, 80 CRI
L930=3000K, 90 CRI
L935=3500K, 90 CRI
L940=4000K, 90 CRI
L950=5000K, 90 CRI

Drive Type [7]

CD=0-10V Dimming Driver (10%-100% Dimming)
HCD=0-10V Dimming Driver (1%-100% Dimming)
SD=Step-dim (Bi Level)
5LTD=DALI Driver [8]
LH=Lutron HiLume (LDE1 series) 1%-100% EcoSystem Driver with Soft-on Fade to Black dimming [24]

No.of Drivers

1=1 Driver
2=2 Drivers [5]

Options

Emergency [9], [10]
EL7W=7-watt 120V-277V emergency battery pack [11]
EL10W=10-watt 120V-277V emergency battery pack [11]
EL14W=14-watt 120V-277V emergency battery pack [11]
EL10WSD=10W emergency battery pack with self-diagnostic installed [11], [12]
EL14WSD=14W emergency battery pack with self-diagnostic installed [11], [12]
GTR2=Bodine Generator Transfer Relay [13]
ETRD=Emergency Transfer Relay with dimming control [13]

Wiring [14], [15]
PI/CPI=Plug in and cross over plug in options [22]
PC6/120=(NEMA 5-15P) 6 ft. Cord with NEMA Straight Plug
PC6/277=(NEMA L7-15P) 6 ft. Cord with NEMA Twist Plug
C6(1)=1 Circuit, 6 ft. Cord no Plug
C3(1)=1 Circuit, 3 ft. Cord no Plug

Sensor [10], [25]
[Blank]=No Sensor
WLS (formerly WAB)=WaveLinx LITE Wireless Sensor, Occupancy w/ photocell, Independent & Networked [B]
WPS (formerly WAA)=WaveLinx PRO Wireless Sensor, Occupancy w/ photocell, Networked [A]
WLS4=WaveLinx LITE, Dimming Motion and Daylight, Bluetooth Programmable, 15' - 40' Mounting [21], [23], [B]
WPS4=WaveLinx PRO, Dimming Motion and Daylight, WAC Programmable, 15' - 40' Mounting [A]

Sensor Location
MID=Mid-row

Knockouts

[Blank]=Clean Channel
FKO=Full Side KOs

Paint Finish

[Blank]=Standard White
PAF=Painted after fab. (White)
BLK=PAF Black [17]
GRY=PAF Gray [17]

Packaging

U=Unit Pack

Accessories (Order Separately) [18]

AYC-CHAIN/SET-U=(2) 36" Chain Hanger (Use 1 set per fixture)
SCF=Fixed Stem Set (Specify Length) [19]
SCS=Swivel Stem Set (Specify Length) [19]
SCA=Adjustable 48" Stem Set [19]
EYE-CHAIN/SET-B=Eye Bolt Chain (Use 1 set per fixture)
WG-SNX/SN-2FT-B-PK=2ft Wire Guard
WG-SNX/SN-4FT-B=4ft Wire Guard
A-1-B/SPACER-B=Spacer 1-1/2" to 2-1/2" from ceiling (Use 2 per fixture) [19]
TOGGLE=Single Toggle No. 2 (Specify Length) [19]
Y-Toggle-10-2PK=(2) Y-Toggle Cable Kits at 10FT long
GRP-SNF-U=Gripper Hanger
CLC-SNLED-EXT-B=SN/SNX Long Row Aligner Extension
ANGLBKT-SNX=Wall hanger, Angle bracket, 1 pair (Use 1 set per fixture)

Round Replacement Lenses
SNX-LENS-LW-2FT-U= Replacement Lens 2 ft, Full Frost
SNX-LENS-LN-2FT-U= Replacement Lens 2 ft, Semi Frost
SNX-LENS-LC-2FT-U= Replacement Lens 2 ft, Clear
SNX-LENS-LW-4FT-U= Replacement Lens 4 ft, Full Frost
SNX-LENS-LN-4FT-U= Replacement Lens 4 ft, Semi Frost
SNX-LENS-LC-4FT-U= Replacement Lens 4 ft, Clear

Square Replacement Lenses
SNX-SQLENS-SLW-2FT-U= Replacement Lens 2 ft, Full Frost
SNX-SQLENS-SLW-4FT-U= Replacement Lens 4 ft, Full Frost

Flat Replacement Lenses
SNX-Flat Lens-FDL-2FT-U= Replacement Lens 2 ft, Full Frost
SNX-Flat Lens-FDL-4FT-U= Replacement Lens 4 ft, Full Frost

Finished End Cover [20]
DECOEND-RND PK=(2) Full end caps, SNX w/ Round Lens
DECOEND-FDL PK=(2) Full end caps, SNX w/ Flat FDL Lens
DECOEND-SLW PK=(2) Full end caps, SNX w/ Square Lens

Notes: (1) Domestic preference options to meet BAA, TAA or BABA requirements. BABA is the minimum Government compliance requirement for the Build America Buy America standards which is part of the Infrastructure and Investment Jobs Act (IIJA). Individual Government Agencies may have more stringent compliance standards. Please refer to the DOMESTIC PREFERENCES website or consult the CLS Domestic Preferences team for more information. Components shipped separately may be separately analyze under domestic preference requirements.. (2) DesignLights Consortium® Qualified and classified for both DLC Standard and DLC Premium, refer to www.designlights.org for details. (3) Nominal lumen values. See table for value and fixture length. (4) 347/480V max ambient temp 40C. (5) Requires two drivers. (6) SL3 must be ordered in conjunction w/CCT Select. CC83 or 93 default setting is 4000K and Medium output. (7) 2ft with Sensor limited to CD and HCD drivers only. (8) For a complete listing of Fifth Light products, visit www.cooperlighting.com (9) 4 ft and 8 ft only. (10) When ordering sensor or EBP option, specify UNV (for 120 or 277V), 347 or 480V. (11) Factory installed with integral test switch/indicator. For approximate delivered lumens multiply the lumens per watt of the desired fixture by the wattage of the emergency battery pack (100 lm/W x 7=700 lumens). IES-format photometry for luminaire under emergency operation available. (12) EL10WSD and EL14WSD not available with 347V. (13) Used to bypass local control during outage. Must be used in conjunction with UL 1008 device (provided by others). GTR2 include 2 relays on fixtures with dimming drivers. ETRD option only requires one relay when used on a dimming fixture. Must specify voltage as 120 or 277V when ordering GTR2. (14) Consult tech support on numerous options for this feature. (15) Most common C&P shown. Must specify location for cord. All "end" locations will be on the end with sensor installed. (16) Integral Mid-Row sensor does not apply for ZW-SVPD3. (17) Black or gray fixture and lens ends. Refer to Finish multiplier table for performance. (18) Accessories sold separately will be separately analyzed under domestic preference requirements. Consult factory for further information. (19) Order 2 per fixture. (20) Finished Deco end cover cannot be used with ZW end mount sensor or over any end mount fitting. (21) WLSx provided in separate enclosure. (22) For more information on PI/CPI options, refer to 022341_pi_tilw (cooperlighting.com) (23) Not available in Mid-Row Configuration. (24) Consult Marketplace Options- Lutron system pages for additional details and compatibility. Compatible only with driver series shown, and may require two or more drivers. Requires field commissioning to operate or dim. Contact Lutron at www.lutron.com (25) Selectable Lumens or Selectable CCT not compatible with Wavelinx Sensor options.

Integrated options must be used in conjunction with the associated system and may not be compatible with other options or accessories. Please refer to the following: (A) Consult WaveLinx system pages for additional details and compatibility. (B) Consult WaveLinx Lite system pages for additional details and compatibility.

Stock is available in the following catalog numbers:

Catalog Number	Description	Replaces Up To	Selectable CCT	Voltage	Selectable Lumens	Watts	UPC	DLC Product ID
4SNX-SL3-LW-UNV-CC83-CD1-U	4' Single Lens	2-T8 32W, 1-T5HO 54W	3500K-5000K	120-277V	2000-6100	17/33/51	080083265107	S-VF0RKS
8TSNX-SL3-LW-UNV-CC83-CD2-U	8' Single Lens	4-T8 32W, 2-T12 75W	3500K-5000K	120-277V	4100-12000	34/67/101	080083265114	S-7FC8RS

Product Specifications

Construction
- Die-formed cold rolled steel channel and cover
- Convertible end plate for continuous row alignment
- Tool-less channel/wireway cover and captive electrical assembly
- Groove for Tong Hanger
- Surface, wall, pendant or stem mount capable. See available mounting options.

Controls
- Standard with 0-10V dimming driver (10% standard, 1% optional)
- Integrated WaveLinx sensor options provide wireless individual fixture control and enable code compliance, increased energy savings, grouping of fixtures, and connection to WaveLinx control systems
- DALI 2.0 and step-dimming available
- For motion control, reference sensor locations for both end and middle of the row applications

Emergency Battery Pack Option
- Optional 120V-277V integral emergency battery pack available in 7W or 14W
- 90-minute backup period for code compliance
- Generator transfer options available

Electrical
- Long-life LED system with electrical driver for optimal performance
- LED's available in 3000K, 3500K, 4000K or 5000K with CRI of 80 standard or optional 90 CRI
- Three CCT select option available for 80 or 90CRI in warm to cool color temps, see ordering logic
- Lumen select option available in full, medium or low brightness, see performance table and ordering logic
- Electronic drivers available for 120-277V, 347V and 480 applications
- Operating temperature of -20°C to 50°C
- Default CCT/Lumen setting is 4000K and Med Power

Finish
- Standard baked white enamel finish with multi-stage, iron phosphate pretreatment. Baked white enamel finish is standard
- PAF option for added rust protection
- Other paint finishes available: Black (BLK) and GRAY (GR)

Shielding
- Offered with acrylic lens and molded lens cap
- Flat lens with LED diffuse blend (FDL) for general distribution is recommended option
- Round lens offered in three distributions: Clear with linear ribs (LC), semi-frost for narrow distribution, and frost for wide distribution (LW)
- Square frost lens option for wide distribution (SLW) is available

Compliance
- cULus Listed for damp locations
- RoHS compliant
- Complies with IESNA LM-79 and LM-80 standards
- NEMA 410 compliant (drivers)
- State of California Title 24 high efficacy luminaire
- DesignLights Consortium® Qualified and classified for DLC Standard and DLC Premium (refer to www.designlights.org)
- Suitable for closet use when installed to NEC 410.16 spacings standards

BABA Domestic Preference Compliance
- FHWA and FTA agencies are utilizing their BAA rules for BABA compliance. Cooper's products with a BAA designation are manufactured in the US and utilize a BAA COTS exemption rule for compliance. To verify a configured product with specific accessories and options meet BABA Domestic Preference Requirements; submit this catalog number to Cooper Lighting Quotation team for validation by our Engineering and Manufacturing teams. Please refer to the DOMESTIC PREFERENCES website or consult the CLS Domestic Preferences team for more information. Components shipped separately may be separately analyzed under domestic preference requirements.

Limited Warranty
- Five year limited warranty

Captive Light Channel Assembly
- Tool-less removal for easy install
- Captive lens secured in place
- Independent class 2 LED sub-assembly

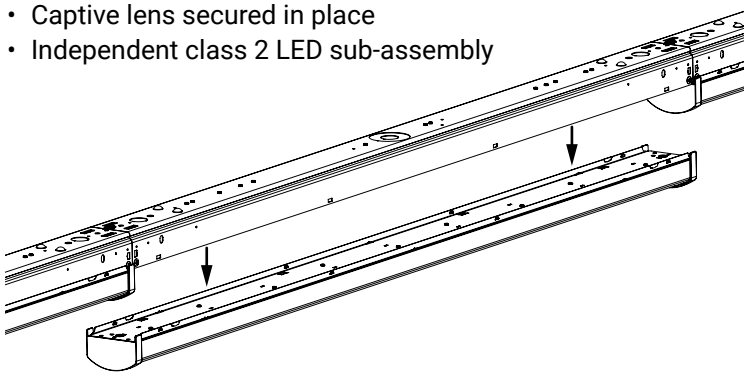

Photometric Data

View IES files

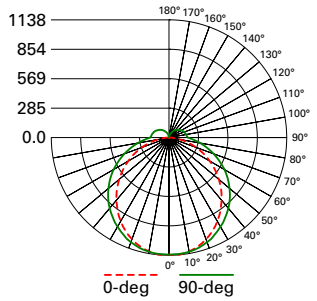

4SNX-41SL-LW-UNV-L850-CD1-U
Electronic Driver
Linear LED 5000K
Spacing criterion: (II) 1.23 x mounting height, (⊥) 1.31 x mounting height
Lumens: 4027
Input Watts: 26.3W
Efficacy: 153 LPW
Test Report: 4SNX-41SL-LW-UNV-L850-CD.IES

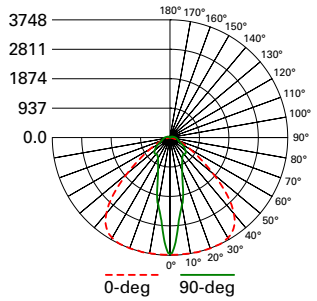

4SNX-41SL-LC-UNV-L850-CD1-U
Electronic Driver
Linear LED 5000K
Spacing criterion: (II) 1.45 x mounting height, (⊥) 0.43 x mounting height
Lumens: 4557
Input Watts: 26.3W
Efficacy: 173 LPW
Test Report: 4SNX-41SL-LC-UNV-L850-CD.IES

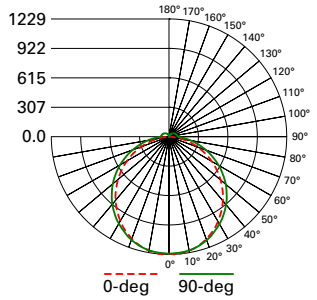

4SNX-41SL-FDL-UNV-L850-CD1-U
Electronic Driver
Linear LED 5000K
Spacing criterion: (II) 1.24 x mounting height, (⊥) 1.28 x mounting height
Lumens: 3877
Input Watts: 26.3W
Efficacy: 147 LPW
Test Report: 4SNX-41SL-FDL-UNV-L850-CD.IES

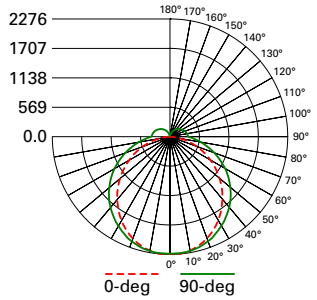

8TSNX-82SL-LW-UNV-L850-CD1-U
Electronic Driver
Linear LED 5000K
Spacing criterion: (II) 1.23 x mounting height, (⊥) 1.31 x mounting height
Lumens: 8053
Input Watts: 52.6W
Efficacy: 153 LPW
Test Report: 8SNX-82SL-LW-UNV-L850-CD.IES

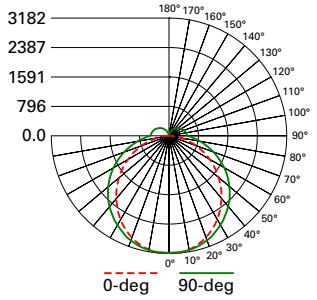

8TSNX-104SL-LW-UNV-L850-CD1-U
Electronic Driver
Linear LED 5000K
Spacing criterion: (II) 1.23 x mounting height, (⊥) 1.31 x mounting height
Lumens: 11260
Input Watts: 79.4W
Efficacy: 142 LPW
Test Report: 8SNX-104SL-LW-UNV-L850-CD.IES

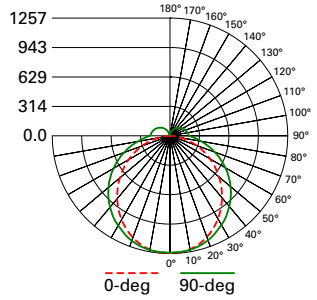

2SNX-47HL-LW-UNV-L850-CD1-U
Electronic Driver
Linear LED 5000K
Spacing criterion: (II) 1.24 x mounting height, (⊥) 1.28 x mounting height
Lumens: 4494
Input Watts: 33.7W
Efficacy: 133 LPW
Test Report: 2SNX-47HL-LW-UNV-L850-CD.IES

Additional Data

CCT Table

Approximate Color Temperature Multiplier	
2700K	.93
3000K	.98
3500K	1.0
4000K	1.02
5000K	1.02

CRI

Lumen multiplier (80CRI to 90CRI)			
3000K	3500K	4000K	5000K
0.805	0.840	0.846	0.901

Shipping Data

Length	Wt.
2 ft.	4.3 lbs.
4 ft.	8.2 lbs.
8 ft.	15.1 lbs.

Lumen Maintenance

Product Model [1]	Ambient Temperature	TM-21 Lumen Maintenance (60,000 hours)	Theoretical L90 (Hours)	Theoretical L70 (Hours)
SNX-SL	25C	89	53,000	175,000
	40C and higher	89	49,000	163,000
SNX-HL	25C	89	55,000	180,000
	40C and higher	87	46,000	155,000

Notes: (1) 4ft and 8ft TM-21 data are equivalent.

Energy and Performance Data - Fixed Output

Lumen Package		Delivered Lumens					Wattage	Efficacy lm/W				
2 ft		LC	LN	LW	SLW	FDL		LC	LN	LW	SLW	FDL
19	SL	2006	1939	1773	1755	1707	12.0	167.2	161.6	147.8	146.3	142.3
23	SL	2429	2347	2146	2124	2066	14.9	163.0	157.5	144.0	142.6	138.7
25	SL	2718	2626	2401	2377	2312	17.5	155.3	150.1	137.2	135.8	132.1
30	SL	3204	3096	2831	2802	2726	21.0	152.6	147.4	134.8	133.4	129.8
40	HL	4347	4200	3727	3689	3725	27.6	157.5	152.2	135.0	133.7	135.0
44	HL	4683	4525	4015	3975	4013	31.1	150.6	145.5	129.1	127.8	129.0
47	HL	5009	4840	4295	4251	4292	33.7	148.6	143.6	127.4	126.1	127.4

Lumen Package		Delivered Lumens					Wattage	Efficacy lm/W				
4 ft		LC	LN	LW	SLW	FDL		LC	LN	LW	SLW	FDL
20	SL	2100	2029	1855	1836	1786	12.1	173.6	167.7	153.3	151.7	147.6
22	SL	2391	2311	2113	2091	2034	13.8	173.3	167.5	153.1	151.5	147.4
26	SL	2823	2728	2494	2469	2401	16.4	172.1	166.3	152.1	150.5	146.4
31	SL	3318	3206	2932	2902	2823	19.5	170.2	164.4	150.4	148.8	144.8
33	SL	3563	3443	3148	3116	3031	21.1	168.9	163.2	149.2	147.7	143.6
37	SL	4013	3877	3545	3509	3413	24.0	167.2	161.5	147.7	146.2	142.2
41	SL	4356	4209	3848	3809	3705	26.3	165.6	160.0	146.3	144.8	140.9
45	SL	4857	4693	4292	4248	4132	29.8	163.0	157.5	144.0	142.6	138.7
48	SL	5191	5015	4586	4540	4416	32.1	161.7	156.2	142.9	141.4	137.6
51	SL	5435	5252	4803	4754	4624	35.0	155.3	150.1	137.2	135.8	132.1
57	SL	6090	5884	5381	5326	5181	39.7	153.4	148.2	135.5	134.2	130.5
60	SL	6408	6192	5662	5605	5452	42.0	152.6	147.4	134.8	133.5	129.8
63	SL	6727	6500	5944	5883	5723	44.4	151.5	146.4	133.9	132.5	128.9
67	SL	7191	6948	6354	6289	6117	47.9	150.1	145.1	132.7	131.3	127.7
74	HL	8015	7745	6873	6803	6869	51.8	154.7	149.5	132.7	131.3	132.6
81	HL	8693	8400	7454	7378	7450	55.1	157.8	152.5	135.3	133.9	135.2
84	HL	9084	8777	7789	7710	7785	57.9	156.9	151.6	134.5	133.2	134.5
87	HL	9366	9050	8031	7949	8026	62.2	150.6	145.5	129.1	127.8	129.0
90	HL	9701	9373	8318	8233	8313	64.4	150.6	145.5	129.2	127.8	129.1
93	HL	10018	9680	8590	8502	8585	67.4	148.6	143.6	127.4	126.1	127.4
100	HL	10765	10402	9231	9137	9226	72.5	148.5	143.5	127.3	126.0	127.3
104	HL	11162	10786	9571	9474	9566	75.5	147.8	142.9	126.8	125.5	126.7

Energy and Performance Data - Fixed Output

Lumen Package		Delivered Lumens					Wattage	Efficacy lm/W				
8 ft		LC	LN	LW	SLW	FDL		LC	LN	LW	SLW	FDL
40	SL	4200	4058	3711	3673	3573	24.2	173.6	167.7	153.3	151.8	147.6
44	SL	4782	4621	4226	4183	4068	27.6	173.3	167.4	153.1	151.6	147.4
52	SL	5646	5455	4989	4938	4803	32.8	172.1	166.3	152.1	150.5	146.4
62	SL	6637	6413	5864	5805	5646	39.0	170.2	164.4	150.4	148.8	144.8
66	SL	7126	6885	6296	6232	6062	42.2	168.9	163.2	149.2	147.7	143.6
74	SL	8025	7754	7091	7019	6827	48.0	167.2	161.5	147.7	146.2	142.2
82	SL	8711	8417	7697	7619	7410	52.6	165.6	160.0	146.3	144.8	140.9
90	SL	9714	9386	8583	8496	8264	59.6	163.0	157.5	144.0	142.6	138.7
96	SL	10381	10031	9173	9079	8831	64.2	161.7	156.2	142.9	141.4	137.6
102	SL	10871	10504	9605	9507	9248	70.0	155.3	150.1	137.2	135.8	132.1
114	SL	12180	11769	10762	10652	10361	79.4	153.4	148.2	135.5	134.2	130.5
120	SL	12817	12384	11325	11209	10903	84.0	152.6	147.4	134.8	133.4	129.8
126	SL	13454	13000	11888	11767	11445	88.8	151.5	146.4	133.9	132.5	128.9
134	SL	14382	13897	12708	12578	12235	95.8	150.1	145.1	132.7	131.3	127.7
148	HL	16031	15490	13746	13606	13738	103.6	154.7	149.5	132.7	131.3	132.6
162	HL	17386	16800	14908	14757	14900	110.2	157.8	152.5	135.3	133.9	135.2
168	HL	18168	17555	15579	15420	15570	115.8	156.9	151.6	134.5	133.2	134.5
174	HL	18731	18099	16062	15898	16053	124.4	150.6	145.5	129.1	127.8	129.0
180	HL	19401	18747	16636	16467	16627	128.8	150.6	145.6	129.2	127.8	129.1
186	HL	20035	19359	17179	17005	17170	134.8	148.6	143.6	127.4	126.1	127.4
200	HL	21531	20804	18462	18274	18452	145.0	148.5	143.5	127.3	126.0	127.3

Energy and Performance Data - Selectable Output

Default CCT/Lumen Setting: 4000K / Med Power

Lens Type	CRI	Length	Lumen Select	Delivered Lumens			Wattage			Efficacy lm/W		
			CCT Select	3500K	4000K	5000K	3500K	4000K	5000K	3500K	4000K	5000K
LC	80	2 ft.	Low	1026	1066	1099	6.9	6.6	6.7	148.7	161.5	164.0
			Med	1990	2198	2133	13.9	13.3	13.2	143.2	165.3	161.6
			High	3016	3232	3331	21	20	20.2	143.6	161.6	164.9
		4 ft.	Low	2275	2405	2270	16.7	16.1	16.9	136.2	149.4	134.3
			Med	4665	4551	4800	33.5	32.3	33.7	139.3	140.9	142.4
			High	6957	7289	6880	50.7	48.9	51.1	137.2	149.1	134.6
		8 ft.	Low	4453	4693	4655	33.5	32.3	33.7	132.9	145.3	138.1
			Med	9383	8909	9364	66.9	64.5	67.5	140.3	138.1	138.7
			High	14575	14220	13468	101.4	97.8	102.2	143.7	145.4	131.8
	90	2 ft.	Low	842	903	904	6.9	6.6	6.7	122.0	136.8	134.9
			Med	1737	1805	1809	13.9	13.3	13.2	125.0	135.7	137.0
			High	2553	2819	2825	21	20.2	20.2	121.6	139.6	139.9
		4 ft.	Low	1944	2036	1926	16.7	16.1	16.9	116.4	126.5	114.0
			Med	3949	3852	4072	33.5	32.3	33.7	117.9	119.3	120.8
			High	5889	6169	5836	50.7	48.9	51.1	116.2	126.2	114.2
		8 ft.	Low	3770	3972	3949	33.5	32.3	33.7	112.5	123.0	117.2
			Med	7704	7540	7943	66.9	64.5	67.5	115.2	116.9	117.7
			High	12338	12035	11425	101.4	97.8	102.2	121.7	123.1	111.8

Energy and Performance Data - Selectable Output

Lens Type	CRI	Length	Lumen Select	Delivered Lumens			Wattage			Efficacy lm/W		
			CCT Select	3500K	4000K	5000K	3500K	4000K	5000K	3500K	4000K	5000K
LN	80	2 ft.	Low	991	1030	1062	6.9	6.6	6.7	143.6	156.1	158.5
			Med	1983	2124	2061	13.9	13.3	13.2	142.7	159.7	156.1
			High	2914	3122	3218	21	20	20.2	138.8	156.1	159.3
		4 ft.	Low	2218	2324	2194	16.7	16.1	16.9	132.8	144.3	129.8
			Med	4508	4398	4638	33.5	32.3	33.7	134.6	136.2	137.6
			High	6722	7043	6648	50.7	48.9	51.1	132.6	144.0	130.1
		8 ft.	Low	4647	4534	4498	33.5	32.3	33.7	138.7	140.4	133.5
			Med	8793	8608	9048	66.9	64.5	67.5	131.4	133.5	134.0
			High	14083	13740	13013	101.4	97.8	102.2	138.9	140.5	127.3
	90	2 ft.	Low	814	899	874	6.9	6.7	6.7	118.0	134.2	130.4
			Med	1679	1744	1748	13.9	13.3	13.2	120.8	131.1	132.4
			High	2467	2724	2730	21	20.2	20.2	117.5	134.9	135.1
		4 ft.	Low	1878	1967	1861	16.7	16.1	16.9	112.5	122.2	110.1
			Med	3816	3722	3934	33.5	32.3	33.7	113.9	115.2	116.7
			High	5691	5782	5639	50.7	48.9	51.1	112.2	118.2	110.4
		8 ft.	Low	3934	3838	3816	33.5	32.3	33.7	117.4	118.8	113.2
			Med	7444	7286	7675	66.9	64.5	67.5	111.3	113.0	113.7
			High	11922	11629	11039	101.4	97.8	102.2	117.6	118.9	108.0

Lens Type	CRI	Length	Lumen Select	Delivered Lumens			Wattage			Efficacy lm/W		
			CCT Select	3500K	4000K	5000K	3500K	4000K	5000K	3500K	4000K	5000K
LW	80	2 ft.	Low	907	914	971	6.9	6.6	6.7	131.4	138.5	144.9
			Med	1813	1942	1829	13.9	13.3	13.2	130.4	146.0	138.6
			High	2586	2771	2943	21	20	20.2	123.1	138.6	145.7
		4 ft.	Low	2028	2125	1947	16.7	16.1	16.9	121.4	132.0	115.2
			Med	4000	4058	4241	33.5	32.3	33.7	119.4	125.6	125.8
			High	6147	6062	5900	50.7	48.9	51.1	121.2	124.0	115.5
		8 ft.	Low	4250	4146	4137	33.5	32.3	33.7	126.9	128.4	122.8
			Med	7803	7639	8273	66.9	64.5	67.5	116.6	118.4	122.6
			High	12878	11826	11548	101.4	97.8	102.2	127.0	120.9	113.0
	90	2 ft.	Low	722	822	824	6.9	6.7	6.6	104.6	122.7	124.8
			Med	1535	1547	1551	13.9	13.3	13.2	110.4	116.3	117.5
			High	2189	2491	2497	21	20.2	20.2	104.2	123.3	123.6
		4 ft.	Low	1717	1799	1652	16.7	16.1	16.9	102.8	111.7	97.8
			Med	3386	3434	3598	33.5	32.3	33.7	101.1	106.3	106.8
			High	5204	5131	5005	50.7	48.9	51.1	102.6	104.9	97.9
		8 ft.	Low	3598	3509	3509	33.5	32.3	33.7	107.4	108.6	104.1
			Med	6606	7195	7018	66.9	64.5	67.5	98.7	111.6	104.0
			High	10902	10009	9796	101.4	97.8	102.2	107.5	102.3	95.9

Energy and Performance Data - Selectable Output

Lens Type	CRI	Length	Lumen Select	Delivered Lumens			Wattage			Efficacy		
			CCT Select	3500K	4000K	5000K	3500K	4000K	5000K	3500K	4000K	5000K
SLW	80	2 ft.	Low	845	905	905	6.9	6.6	6.7	122.5	137.1	135.1
			Med	1795	1923	1810	13.9	13.3	13.2	129.1	144.6	137.1
			High	2560	2743	2913	21	20	20.2	121.9	137.2	144.2
		4 ft.	Low	2008	1980	1927	16.7	16.1	16.9	120.2	123.0	114.0
			Med	3959	4017	4198	33.5	32.3	33.7	118.2	124.4	124.6
			High	6084	6000	5840	50.7	48.9	51.1	120.0	122.7	114.3
		8 ft.	Low	4206	4104	4095	33.5	32.3	33.7	125.6	127.1	121.5
			Med	7724	8415	8189	66.9	64.5	67.5	115.5	130.5	121.3
			High	12747	11706	11431	101.4	97.8	102.2	125.7	119.7	111.8
	90	2 ft.	Low	715	814	816	6.9	6.7	6.6	103.6	121.5	123.6
			Med	1519	1532	1536	13.9	13.3	13.2	109.3	115.2	116.4
			High	2167	2465	2326	21	20.2	20.2	103.2	122.0	115.1
		4 ft.	Low	1700	1676	1635	16.7	16.1	16.9	101.8	104.1	96.7
			Med	3352	3400	3561	33.5	32.3	33.7	100.1	105.3	105.7
			High	5151	5079	5151	50.7	48.9	51.1	101.6	103.9	100.8
		8 ft.	Low	3561	3269	3473	33.5	32.3	33.7	106.3	101.2	103.1
			Med	6539	7122	6947	66.9	64.5	67.5	97.7	110.4	102.9
			High	10791	9907	9697	101.4	97.8	102.2	106.4	101.3	94.9

Lens Type	CRI	Length	Lumen Select	Delivered Lumens			Wattage			Efficacy		
			CCT Select	3500K	4000K	5000K	3500K	4000K	5000K	3500K	4000K	5000K
FDL	80	2 ft.	Low	853	914	914	6.9	6.6	6.7	123.6	138.5	136.4
			Med	1746	1870	1828	13.9	13.3	13.2	125.6	140.6	138.5
			High	2584	2833	2833	21	20.2	20.2	123.0	140.2	140.2
		4 ft.	Low	1953	1999	1946	16.7	16.1	16.9	116.9	124.2	115.1
			Med	3998	3907	4083	33.5	32.3	33.7	119.3	121.0	121.2
			High	5918	6059	5906	50.7	48.9	51.1	116.7	123.9	115.6
		8 ft.	Low	4092	3900	3892	33.5	32.3	33.7	122.1	120.7	115.5
			Med	7799	8185	7966	66.9	64.5	67.5	116.6	126.9	118.0
			High	12399	11820	12373	101.4	97.8	102.2	122.3	120.9	121.1
	90	2 ft.	Low	722	791	793	6.9	6.7	6.6	104.6	118.1	120.2
			Med	1478	1547	1586	13.9	13.3	13.3	106.3	116.3	119.2
			High	2188	2398	2349	21	20.2	20.2	104.2	118.7	116.3
		4 ft.	Low	1653	1692	1651	16.7	16.1	16.9	99.0	105.1	97.7
			Med	3384	3307	3384	33.5	32.3	33.7	101.0	102.4	100.4
			High	5010	5128	5010	50.7	48.9	51.1	98.8	104.9	98.0
		8 ft.	Low	3464	3301	3301	33.5	32.3	33.7	103.4	102.2	98.0
			Med	6602	6927	6757	66.9	64.5	67.5	98.7	107.4	100.1
			High	10496	10004	10496	101.4	97.8	102.2	103.5	102.3	102.7

Finished Decorative End Covers

End View - Round Lens

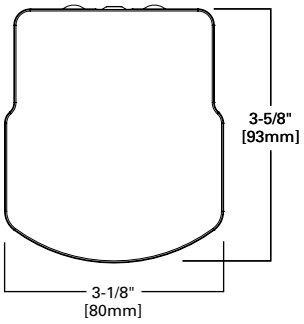

End View - Square Lens

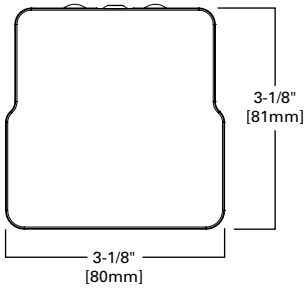

End View - Flat Lens

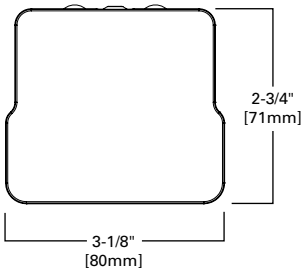

Dimensional and Mounting Details

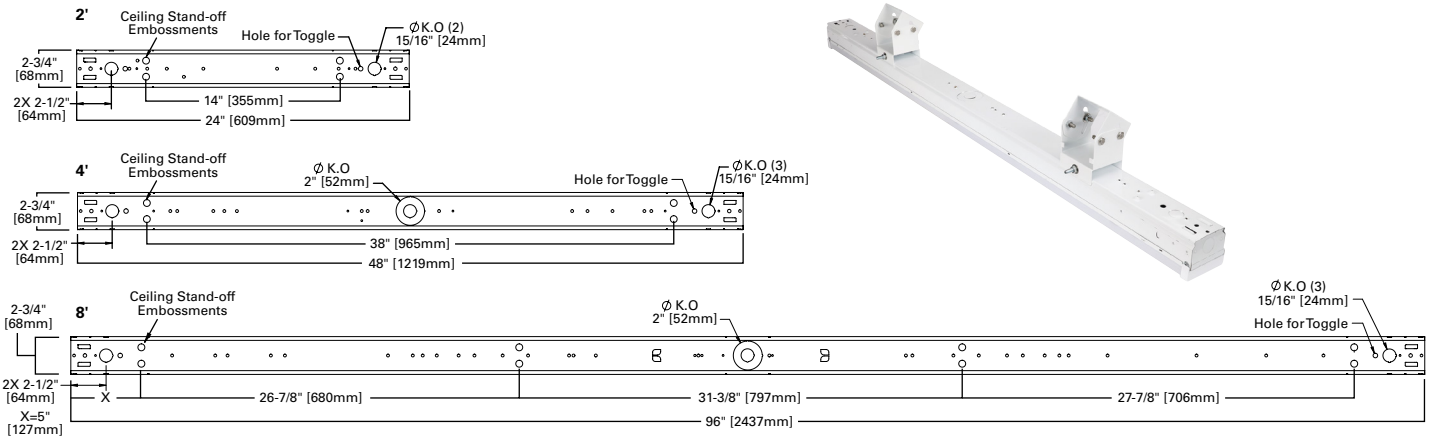

Angle Bracket - ANGLBKT-SNX

Fixture Size with Sensor

WPS4 or WLS4

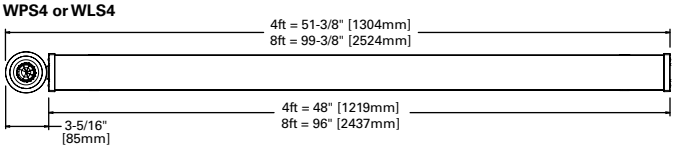

WPS or WLS

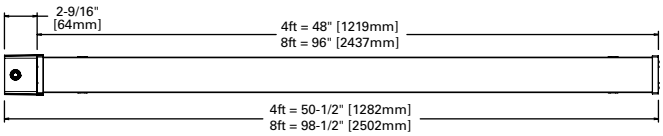

Mid-Row Sensor

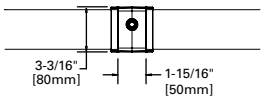

Options

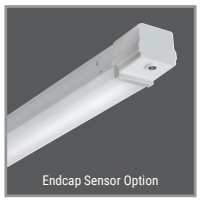

Accessories

Control Solutions

- WaveLinx LITE wireless
- WaveLinx PRO wireless
- WaveLinx CAT wired
- WaveLinx Wired

The SNX with WaveLinx offers no-hassle lighting control with multiple luminaire level control solutions.

WaveLinx PRO is a wireless lighting control solution, for connected spaces, that significantly reduces a building's energy consumption. From a single floor to an entire campus, WaveLinx PRO connects more than lighting assets; it shares aggregated sensor data with the WaveLinx CORE platform and other building systems, so building owners can improve operations, spaces environment, and tenants' experience. WaveLinx PRO offers a rich portfolio of wireless devices, WaveLinx PRO-enabled luminaires, and an intuitive WaveLinx mobile app for office, education, warehouse, and parking garage applications.

WaveLinx LITE is a cost effective, wireless digital lighting control solution, with out-of-the-box functionality, that saves energy and meets code. It's designed for applications that require occupancy-based, daylighting, or manual light control. Customize installations for office, education, warehouse and parking garages using the secure, simple mobile app.

Integrated Sensor Coverage Pattern

WaveLinx PRO/LITE Sensor – WLS and WPS

TOP VIEW:

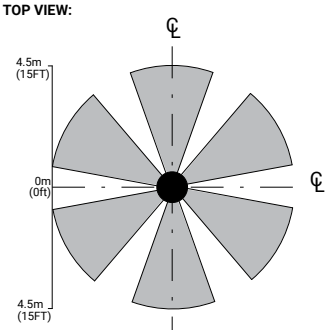

SIDE VIEW:

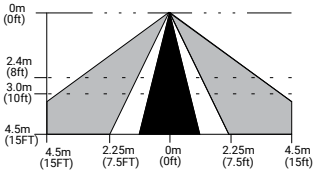

***Note**: Installation of integrated sensors within 3-ft (1m) of HVAC air vents is not recommended. The pattern shown is intended solely as a general guide and is not to scale.*

WaveLinx PRO/LITE Sensor – WLS2 and WPS2

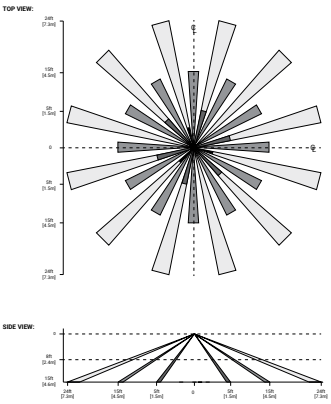

WaveLinx PRO/LITE Sensor – WLS4 and WPS4

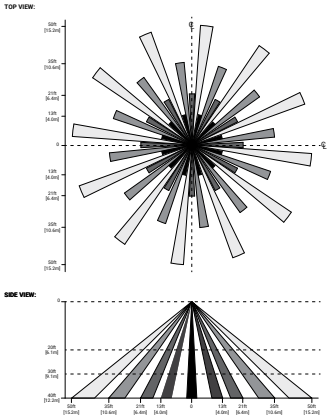

With Integrated WaveLinx Sensor

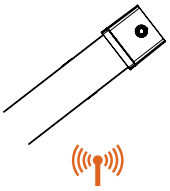

With Integrated WaveLinx Node

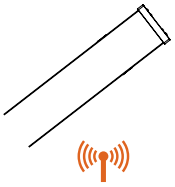

Add a hidden WaveLinx sensor node (WPN, WLN) to your space lighting design!

Allows to:

- Keeps luminaire aesthetics
- Connect fixtures without the realestate to include sensor option such as downlights
- Connect sealed fixtures without a standard sensor option such as products for clinical space.

Integrated Controls Options

Option	Out of the Box Functionality	Luminaire Level Lighting Control (LLLC)	Automatic Dimming Photocell	Occupancy Sensing	CCT Control
WLS	X	X	X	X	
WPS		X	X	X	

Systems comparison chart

Cooper Lighting Solutions provides many lighting system solutions designed to satisfy code requirements and meet the unique needs of any project.

	Luminaire with standalone sensor	Standalone Spaces WaveLinx LITE	Standalone Spaces WaveLinx CAT	Networked Spaces WaveLinx PRO	Enterprise WaveLinx CORE
Occupancy	Yes	Yes	Yes	Yes	Yes
Daylighting	Yes	Yes	Yes	Yes	Yes
Wallstations	–	Yes	Yes	Yes	Yes
Gateways	–	–	–	1 WAC	300 WACs
Devices (MAX)	–	40 per Area (1120 per space)	40 per Area	200 per WAC2	32,500 per CORE Enterprise
Software	–	WaveLinx LITE Mobile App	WaveLinx CAT Mobile App	WaveLinx Mobile App	CORE
Areas	–	28 per Space	Unlimited	50 per WAC2	up to 3,000
Zones	–	16 per Area	16 per Area	16 per Area	up to 9,000
Scheduling	–	–	–	Local	Global
VividTune™	–	–	–	Yes	Yes
Plug-Load Control	–	Yes	Yes	Yes	Yes
Low-Voltage Power	–	–	Yes	Yes	Yes
Integration	–	–	–	–	BACnet, API
Dashboards	–	–	–	–	Energy, Occupancy
Configuration	–	Installer	Installer	Technician	Technician / IT

Cooper Lighting Solutions
1121 Highway 74 South
Peachtree City, GA 30269
P: 770-486-4800
www.cooperlighting.com

© 2025 Cooper Lighting Solutions
All Rights Reserved.

Specifications and dimensions subject to change without notice.