HALO®

LED Track Lighting

COOPER
Lighting Solutions

halolighting.com

Innovation you can rely on™

Technology Choice from **HALO**®

The sustainability of the Halo LED luminaire family dramatically reduces the maintenance and service costs over traditional sources. Light emitting diodes (LED) are solid state devices that do not have filaments or glass components that can break, causing the source to fail. Over 70% of the initial light output is maintained after 50,000 hours of operation. LED technology is perfect for almost all applications given there is limited infrared, low heat and no ultraviolet emissions.

Energy Savings

Environmental and legislative awareness continues to drive demand for energy-efficient lighting solutions. LED luminaires are high-efficiency alternatives to more traditional light sources, such as halogen, fluorescent and ceramic metal halide (CMH). Simply changing one fixture to Halo LED saves $365 over the life of the fixture.

- Energy Saving $235[1]
- Replacement Lamp Savings $125
- Savings based on twelve hours of average use per day and 50,000 hours lifetime of the L806HO vs. 70W CMH

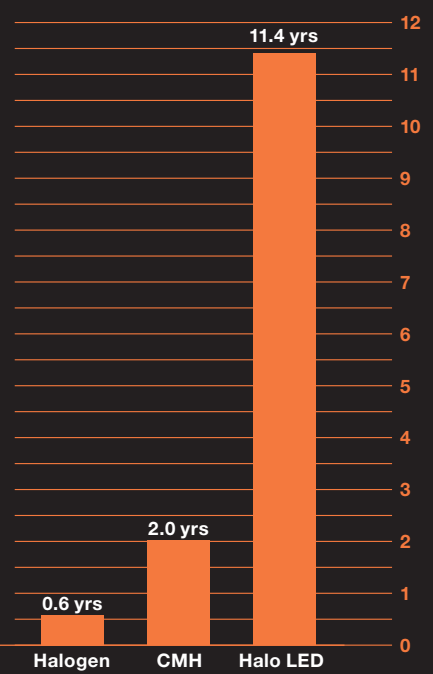

Life Comparison[2]

[1] Average energy cost of $0.11 per KWH
[2] 4,380 hours/year (12 hours per day)

L806SM / L807SM

The Halo L806SM and L807SM LED track fixture family are high-efficacy with a low-profile design. Ideal for accent and display lighting applications, the L806SM and L807SM feature die-cast aluminum construction in two sleek, simple designs. Available in multiple color temperatures and beam distributions, these luminaires are perfect for those applications where simplicity and performance are required.

Features

- 1073 lumen package @ 3000K
- 89 LPW @ 12.06W
- Various optical distributions available
- 80+ CRI
- 2700K, 3000K, and 4000K color temperatures
- Three finishes: White, Matte Black, Aluminum Haze
- Available on multiple Halo Power-Trac systems as well as Juno®, Lightolier® and Global® track systems
- L70 @ 50,000 hours
- Five-year warranty

L806SM

L807SM

Ordering Information

Sample Number: L806SP830AH (Halo or Lazer Track connector, Spot Distribution, 3000K, with Aluminum Haze Finish)

Track	LED	Beam	CRI	CCT	Finish	Voltage
L=Halo Power Trac and Lazer Track **LJ**=Juno® Track[1] **LL**=Lightolier® Track[2] **L2G**=Global® TEK or HTEK[3]	**806SM**=806SM **807SM**=807SM	**SP**=Spot 14° **WS**=Wide Spot 18° **NF**=Narrow Flood 28° **FL**=Flood 44°	**80**=80+	**27**=2700K **30**=3000K **40**=4000K	**AH**=Aluminum Haze **MB**=Black **P**=White	**277**=277V (Only with HTEK) **[Blank]**=120V

NOTES: 1. Juno® T single circuit and 2-circuit track contact. Juno® is a registered trademark of Juno® Lighting. **2.** Lightolier® Lyfespan 6000 single circuit and 2 circuit track contact. Lightolier® is a registered trademark of Philips Lighting. **3.** Global® is a registered trademark of Nordic Aluminum.

Fixture is recommended for use with ceiling mount track systems only. For alternate mounting methods consult factory.

Energy Data

L806 / L807

3000K	CBCP
Spot 14°	11,119
Wide Spot 18°	6482
Narrow Flood 28°	2639
Flood 44°	1622

Lighting Data - 3000K Spot	
Lumens	1073
Lumens per Watt	89
Watts at 120VAC	12.06

Energy Data	
Input Power	12.06W
Power Factor	>.9
Input Current	.149 Amps

Dimensions

L806SM

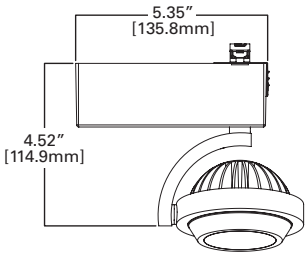

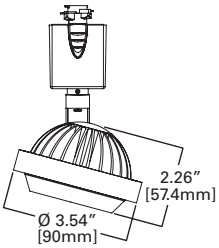

L807SM

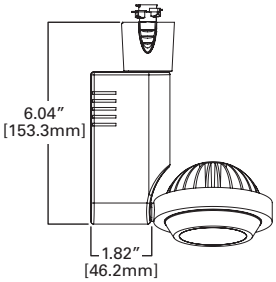

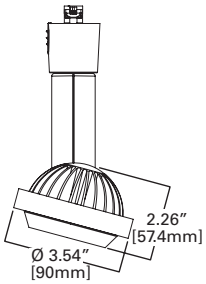

Photometry

CCT= 3000K
2700K Multiplier= 0.92
4000K Multiplier= 1.05

0° Aiming Angle Horizontal Footcandles

	D	FC	L	W
Spot: 14°	4	686	1.5	1.5
CBCP: 11,119	7	224	2.6	2.6
Lumens: 1073	9	135	3.3	3.3
LPW: 89	13	65	4.8	4.8
	16	43	6	6
	D	**FC**	**L**	**W**
Wide Spot: 18°	4	400	2	2
CBCP: 6,482	7	131	3.5	3.5
Lumens: 1000	9	79	4.6	4.6
LPW: 83	13	38	6.6	6.6
	16	25	8.1	8.1
	D	**FC**	**L**	**W**
Narrow Flood: 28°	4	165	3.1	3.1
CBCP: 2,639	7	54	5.5	5.5
Lumens: 934	9	33	7.1	7.1
LPW: 75	13	16	10.2	10.2
	16	10	12.6	12.6
	D	**FC**	**L**	**W**
Flood: 44°	4	101	4.1	4.1
CBCP: 1,622	7	33	7.2	7.2
Lumens: 919	9	20	9.3	9.3
LPW: 77	13	10	13.4	13.4
	16	6	16.6	16.6

30° Aiming Angle Horizontal Footcandles

	D	FC	L	W	CB
Spot: 14°	4	445	2	1.6	2.3
CBCP: 11,119	7	145	3.5	2.8	4
Lumens: 1073	9	88	4.4	3.6	5.2
LPW: 89	13	42	6.4	5.2	7.5
	16	28	7.9	6.4	9.2
	D	**FC**	**L**	**W**	**CB**
Wide Spot: 18°	4	261	2.6	2.3	2.3
CBCP: 6,482	7	85	4.5	4	4
Lumens: 1000	9	52	5.8	5.1	5.2
LPW: 83	13	25	8.4	7.3	7.5
	16	16	10.3	9	9.2
	D	**FC**	**L**	**W**	**CB**
Narrow Flood: 28°	4	115	4	3.6	2.3
CBCP: 2,639	7	38	6.9	6.2	4
Lumens: 934	9	23	8.9	8	5.2
LPW: 75	13	11	12.9	11.6	7.5
	16	7	15.9	14.2	9.2
	D	**FC**	**L**	**W**	**CB**
Flood: 44°	4	76	5	4.6	2.3
CBCP: 1,622	7	25	8.7	8	4
Lumens: 919	9	15	11.2	10.3	5.2
LPW: 77	13	7	16.2	14.9	7.5
	16	5	19.9	18.3	9.2

30° Aiming Angle Vertical Footcandles on Wall

	D	FC	L	W	CB
Spot: 14°	2	428	2.5	1.3	3.5
CBCP: 11,119	4	107	5	2.7	6.9
Lumens: 1073	6	48	7.5	4	10.4
LPW: 89	10	17	12.5	6.6	17.3
	12	12	15	8	20.8
	D	**FC**	**L**	**W**	**CB**
Wide Spot: 18°	2	257	3.2	1.8	3.5
CBCP: 6,482	4	64	6.5	3.5	6.9
Lumens: 1000	6	29	9.7	5.3	10.4
LPW: 83	10	10	16.2	8.8	17.3
	12	7	19.4	10.6	20.8
	D	**FC**	**L**	**W**	**CB**
Narrow Flood: 28°	2	125	4.2	2.7	3.5
CBCP: 2,639	4	31	8.4	5.4	6.9
Lumens: 934	6	14	12.6	8	10.4
LPW: 75	10	5	21.1	13.4	17.3
	12	3	25.3	16.1	20.8
	D	**FC**	**L**	**W**	**CB**
Flood: 44°	2	117	3.8	3.1	3.5
CBCP: 1,622	4	29	7.5	6.2	6.9
Lumens: 919	6	13	11.3	9.3	10.4
LPW: 77	10	5	18.8	15.5	17.3
	12	3	22.6	18.7	20.8

Notes and Definitions
Beam spread is to 50% center beam candlepower (CBCP).
D= Distance in feet to floor or wall.
FC= Footcandles on floor or wall at center beam aiming location.
L= Effective Visual Beam length in feet (50% of maximum footcandle level)
W= Effective Visual Beam width in feet (50% of maximum footcandle level)
CB= Distance in feet across or down to center beam location

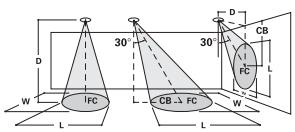

L806 / L807

The Halo L806 and L807 LED track fixture family are high-efficacy with a low-profile design. Ideal for accent and display lighting applications, the L806 and L807 feature die-cast aluminum construction in two sleek, simple designs. Available in multiple color temperatures and beam distributions, these luminaires are perfect for those applications where simplicity and performance are required.

Features

- 1250 lumen package @ 3000K
- 70 LPW @ 17W
- Various optical distributions available
- 80+ CRI
- 2700K, 3000K, and 4000K color temperatures
- Three finishes: White, Matte Black, Aluminum Haze
- Available on multiple Halo Power-Trac systems as well as Juno®, Lightolier® and Global® track systems
- DLC compliant
- L70 @ 50,000 hours
- Five-year warranty

L806

L807

Ordering Information

Sample Number: L806SP830AH (Halo or Lazer Track connector, Spot Distribution, 3000K, with Aluminum Haze Finish)

Track	LED	Beam	CRI	CCT	Finish	Voltage
L=Halo Power Trac and Lazer Track **LJ**=Juno® Track[1] **LL**=Lightolier® Track[2] **L2G**=Global® TEK or HTEK[3]	**806**=806 **807**=807	**SP**=Spot 15° **NF**=Narrow Flood 22° **FL**=Flood 37°	**80**=80+	**27**=2700K **30**=3000K **40**=4000K	**AH**=Aluminum Haze **MB**=Black **P**=White	**277**=277V (Only with HTEK) **[Blank]**=120V

NOTES: 1. Juno® T single circuit and 2-circuit track contact. Juno® is a registered trademark of Juno® Lighting. **2.** Lightolier® Lyfespan 6000 single circuit and 2 circuit track contact. Lightolier® is a registered trademark of Philips Lighting. **3.** Global® is a registered trademark of Nordic Aluminum.

DesignLights Consortium® Qualified. Refer to www.designlights.org Qualified Products List under Family Models for details.

Fixture is recommended for use with ceiling mount track systems only. For alternate mounting methods consult factory.

Energy Data

L806 / L807

3000K	CBCP	Lighting Data - 3000K Spot		Energy Data	
Spot 15°	11,057	Lumens	1253	Input Power	17.71W
Narrow Flood 22°	8990	Lumens per Watt	70.8	Power Factor	>.9
Flood 37°	2480	Watts at 120VAC	17.71	Input Current	.149 Amps

Dimensions

L806

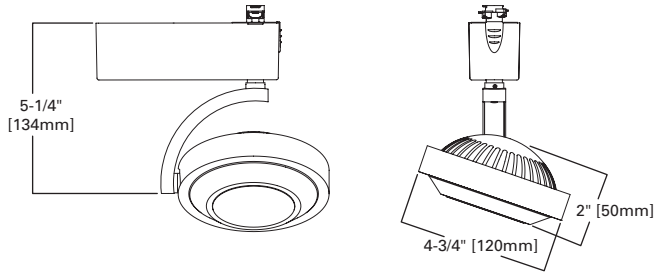

L807

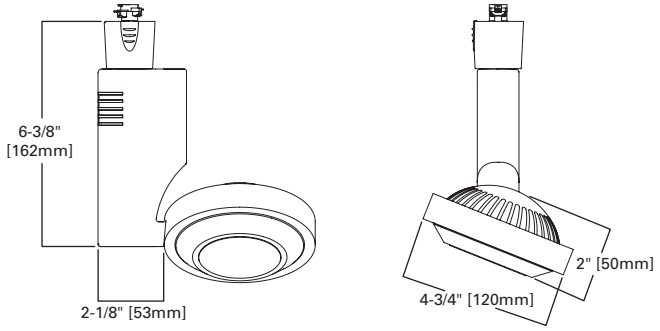

Photometry

CCT= 3000K
4000K Multiplier= 1.25

	0° Aiming Angle Horizontal Footcandles				30° Aiming Angle Horizontal Footcandles					30° Aiming Angle Vertical Footcandles on Wall					60° Aiming Angle Vertical Footcandles on Wall				
	D	FC	L	W	D	FC	L	W	CB	D	FC	L	W	CB	D	FC	L	W	CB
Wide Spot: 15°	5	442	1.4	1.4	5	287	1.7	1.5	2.9	3	180	2.6	1.5	5.2	3	798	1	0.9	1.7
CBCP: 11,057	7.5	197	2	2	7.5	128	2.6	2.3	4.3	4	101	3.4	1.9	6.9	4	449	1.4	1.2	2.3
Lumens: 1253	10	111	2.7	2.7	10	72	3.5	3.1	5.8	5	65	4.3	2.4	8.7	5	287	1.7	1.5	2.9
LPW: 70.8	12.5	71	3.4	3.4	12.5	46	4.3	3.8	7.2	6	45	5.1	2.9	10.4	6	199	2.1	1.8	3.5
	15.0	49	4.1	4.1	15	32	5.2	4.6	8.7										
	D	FC	L	W	D	FC	L	W	CB	D	FC	L	W	CB	D	FC	L	W	CB
Narrow Flood: 22°	5	360	1.7	1.7	5	234	2.2	1.9	2.9	3	158	2.9	1.7	5.2	3	649	1.3	1.1	1.7
CBCP: 8,990	7.5	160	2.5	2.5	7.5	104	3.3	2.8	4.3	4	89	3.9	2.3	6.9	4	365	1.7	1.5	2.3
Lumens: 1289	10	90	3.3	3.3	10	58	4.3	3.8	5.8	5	57	4.9	2.9	8.7	5	234	2.2	1.9	2.9
LPW: 72.4	12.5	58	4.2	4.2	12.5	37	5.4	4.7	7.2	6	40	5.8	3.5	10.4	6	162	2.6	2.3	3.5
	15	40	5	5	15	26	6.5	5.7	8.7										
	D	FC	L	W	D	FC	L	W	CB	D	FC	L	W	CB	D	FC	L	W	CB
Flood: 37°	5	99	3.2	3.2	5	72	3.6	3.4	2.9	3	67	3.2	2.7	5.2	3	201	2.2	2.1	1.7
CBCP: 2,480	7.5	44	4.8	4.8	7.5	32	5.5	5.2	4.3	4	38	4.3	3.6	6.9	4	113	2.9	2.8	2.3
Lumens: 1228	10	25	6.4	6.4	10	18	7.3	6.9	5.8	5	24	5.4	4.5	8.7	5	72	3.6	3.4	2.9
LPW: 69	12.5	16	8	8	12.5	12	9.1	8.6	7.2	6	17	6.5	5.4	10.4	6	50	4.4	4.1	3.5
	15	11	9.6	9.6	15	8	10.9	10.3	8.7										

Notes and Definitions
Beam spread is to 50% center beam candlepower (CBCP).
D= Distance in feet to floor or wall.
FC= Footcandles on floor or wall at center beam aiming location.
L= Effective Visual Beam length in feet (50% of maximum footcandle level)
W= Effective Visual Beam width in feet (50% of maximum footcandle level)
CB= Distance in feet across or down to center beam location

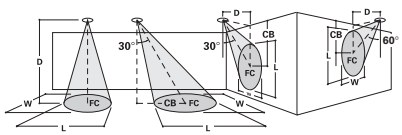

L806HO / L807HO

The Halo L806HO and L807HO LED high-efficacy, low-profile track fixture is ideal for accent and display lighting applications. Featuring die-cast construction with a simple low profile design, these lampholders are perfect for those applications where performance is required from a discreet source.

Features

- 2600 lumen package @ 3000K
- 73 LPW @ 34W
- Various optical distributions available
- 80+ CRI
- 2700K, 3000K, and 4000K color temperatures
- Three finishes: White, Matte Black, Aluminum Haze
- Available on multiple Halo Power-Trac systems as well as Juno®, Lightolier® and Global® track systems
- DLC compliant
- L70 @ 50,000 hrs.
- Five-year warranty

L806HO

L807HO

Ordering Information

Sample Number: L806HOSP8030AH (Halo or Lazer Track connector, Spot Distribution, 3000K, with Aluminum Haze Finish)

Track	LED	Beam	CRI	CCT	Finish	Voltage
L=Halo Power Trac and LazerTrack **LJ**=Juno® Track[1] **LL**=Lightolier® Track[2] **L2G**=Global® TEK or HTEK[3]	**806HO**=806HO **807HO**=807HO	**SP**=Spot 11° **WS**=Wide Spot 18° **NF**=Narrow Flood 25° **FL**=Flood 45°	**80**=80+	**27**=2700K **30**=3000K **40**=4000K	**AH**=Aluminum Haze **MB**=Black **P**=White	**277**=277V (Only with HTEK) **[Blank]**=120V

NOTES: 1. Juno® T single circuit and 2-circuit track contact. Juno® is a registered trademark of Juno® Lighting. **2.** Lightolier® Lyfespan 6000 single circuit and 2 circuit track contact. Lightolier® is a registered trademark of Philips Lighting. **3.** Global® is a registered trademark of Nordic Aluminum.

DesignLights Consortium® Qualified. Refer to www.designlights.org Qualified Products List under Family Models for details.

Fixture is recommended for use with ceiling mount track systems only. For alternate mounting methods consult factory.

Energy Data

L806HO / L807HO

3000K	CBCP
Spot 11°	32,900
Wide Spot 18°	26,250
Narrow Flood 25°	10,800
Flood 45°	4,600

Lighting Data - 3000K Spot	
Lumens	2600
Lumens per Watt	76

Energy Data	
Input Power	34.12W
Power Factor	>.9
Input Current	.30 Amps

Dimensions

L806HO

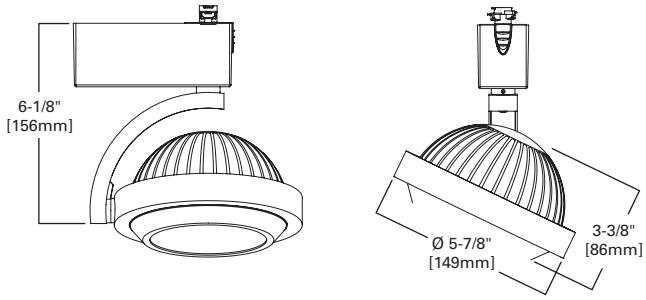

L807HO

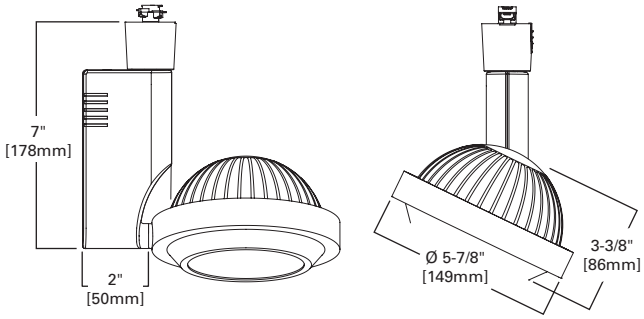

Photometry

CCT= 3000K
4000K Multiplier= 1.25

0° Aiming Angle Horizontal Footcandles

	D	FC	L	W
Spot: 11°	4	2055	1.4	1.4
CBCP: 32,900	7	671	2.4	2.4
Lumens: 2499	9	406	3.1	3.1
LPW: 73	13	195	4.5	4.5
	16	128	5.5	5.5
	D	**FC**	**L**	**W**
Wide Spot: 18°	4	1641	1.5	1.5
CBCP: 26,250	7	536	2.6	2.6
Lumens: 2609	9	324	3.4	3.4
LPW: 76	13	155	4.9	4.9
	16	103	6	6
	D	**FC**	**L**	**W**
Narrow Flood: 25°	4	676	2.7	2.7
CBCP: 10,800	7	221	4.7	4.7
Lumens: 2663	9	133	6.1	6.1
LPW: 77	13	64	8.8	8.8
	16	42	10.8	10.8
	D	**FC**	**L**	**W**
Flood: 45°	4	287	4.3	4.3
CBCP: 4,600	7	94	7.5	7.5
Lumens: 2794	9	57	9.6	9.6
LPW: 80	13	27	13.9	13.9
	16	18	17.1	17.1

30° Aiming Angle Horizontal Footcandles

	D	FC	L	W	CB
Spot: 11°	4	1335	1.6	1.5	2.3
CBCP: 32,900	7	436	2.8	2.6	4
Lumens: 2499	9	264	3.5	3.3	5.2
LPW: 73	13	126	5.1	4.8	7.5
	16	83	6.3	5.9	9.2
	D	**FC**	**L**	**W**	**CB**
Wide Spot: 18°	4	1066	2.1	1.8	2.3
CBCP: 26,250	7	348	3.6	3.2	4
Lumens: 2609	9	211	4.7	4.1	5.2
LPW: 76	13	101	6.7	5.9	7.5
	16	67	8.3	7.2	9.2
	D	**FC**	**L**	**W**	**CB**
Narrow Flood: 25°	4	447	3.4	3.1	2.3
CBCP: 10,800	7	146	6	5.4	4
Lumens: 2663	9	88	7.7	6.9	5.2
LPW: 77	13	42	11.1	9.9	7.5
	16	28	13.7	12.2	9.2
	D	**FC**	**L**	**W**	**CB**
Flood: 45°	4	221	5.1	4.7	2.3
CBCP: 4,600	7	72	8.9	8.2	4
Lumens: 2794	9	44	11.5	10.5	5.2
LPW: 80	13	21	16.5	15.2	7.5
	16	14	20.4	18.7	9.2

30° Aiming Angle Vertical Footcandles on Wall

	D	FC	L	W	CB
Spot: 11°	2	1196	2.2	1.1	3.5
CBCP: 32,900	4	299	4.4	2.3	6.9
Lumens: 2499	6	133	6.6	3.4	10.4
LPW: 73	10	48	11	5.7	17.3
	12	33	13.2	6.9	20.8
	D	**FC**	**L**	**W**	**CB**
Wide Spot: 18°	2	896	2.7	1.5	3.5
CBCP: 26,250	4	224	5.4	2.9	6.9
Lumens: 2609	6	100	8.1	4.4	10.4
LPW: 76	10	36	13.4	7.3	17.3
	12	25	16.1	8.8	20.8
	D	**FC**	**L**	**W**	**CB**
Narrow Flood: 25°	2	464	3.8	2.3	3.5
CBCP: 10,800	4	116	7.6	4.7	6.9
Lumens: 2663	6	52	11.4	7	10.4
LPW: 77	10	19	18.9	11.7	17.3
	12	13	22.7	14.1	20.8
	D	**FC**	**L**	**W**	**CB**
Flood: 45°	2	347	3.8	3.2	3.5
CBCP: 4,600	4	87	7.5	6.3	6.9
Lumens: 2794	6	39	11.3	9.5	10.4
LPW: 80	10	14	18.8	15.8	17.3
	12	10	22.5	19	20.8

Notes and Definitions

Beam spread is to 50% center beam candlepower (CBCP).

D= Distance in feet to floor or wall.

FC= Footcandles on floor or wall at center beam aiming location.

L= Effective Visual Beam length in feet (50% of maximum footcandle level)

W= Effective Visual Beam width in feet (50% of maximum footcandle level)

CB= Distance in feet across or down to center beam location

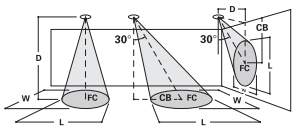

L806XHO

The Halo L806XHO LED high-efficacy, low-profile track fixture is ideal for accent and display lighting applications. Featuring die-cast construction with a simple low profile design, these luminaires are ideal for applications that demand outstanding performance at no compromise to energy efficiency.

Features

- 4100 lumen package @ 3000K
- 87 LPW @ 48W
- Various optical distributions available
- 80+ CRI
- 2700K, 3000K, and 4000K color temperatures
- Three finishes: White, Matte Black, Aluminum Haze
- Available on multiple Halo Power-Trac systems as well as Juno®, Lightolier® and Global® track systems
- L70 @ 50,000 hrs.
- Five-year warranty

Ordering Information

Sample Number: L806XHOSP8030AH (Halo or Lazer Track connector, Spot Distribution, 3000K, with Aluminum Haze Finish)

Track	LED	Beam	CRI	CCT	Finish	Voltage
L=Halo Power Trac and Lazer Track **LJ**=Juno® Track[1] **LL**=Lightolier® Track[2] **L2G**=Global® TEK or HTEK[3]	**806XHO**=806XHO	**SP**=Spot 11° **WS**=Wide Spot 16° **NF**=Narrow Flood 25° **FL**=Flood 45°	**80**=80 min	**27**=2700K **30**=3000K **40**=4000K	**AH**=Aluminum Haze **MB**=Black **P**=White	**277**=277V (Only with HTEK) **[Blank]**=120V

NOTES: 1. Juno® T single circuit and 2-circuit track contact. Juno® is a registered trademark of Juno® Lighting. **2.** Lightolier® Lyfespan 6000 single circuit and 2 circuit track contact. Lightolier® is a registered trademark of Philips Lighting. **3.** Global® is a registered trademark of Nordic Aluminum.

Fixture is recommended for use with ceiling mount track systems only. For alternate mounting methods consult factory.

Energy Data

L806XHO

3000K	CBCP
Spot 11°	54,312
Wide Spot 18°	42,748
Narrow Flood 25°	18,852
Flood 45°	7,570

Lighting Data - 3000K Spot	
Lumens	4124
Lumens per Watt	87

Energy Data	
Input Power	47.5W
Power Factor	>.9
Input Current	.40 Amps

Dimensions

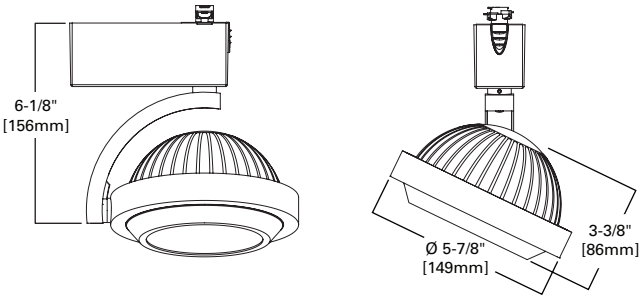

Photometry

CCT= 3000K

	0° Aiming Angle Horizontal Footcandles				30° Aiming Angle Horizontal Footcandles					30° Aiming Angle Vertical Footcandles on Wall				
	D	FC	L	W	D	FC	L	W	CB	D	FC	L	W	CB
Spot: 11°	4′	3394.2	0.8	0.8	4′	2253.6	1	0.8	2.3	2′	1980.1	1.3	0.6	3.5
CBCP: 54,312	7′	1108.3	1.4	1.4	7′	735.9	1.8	1.6	4	4′	495	2.7	1.4	6.9
Lumens: 4124	9′	670.5	1.8	1.8	9′	445.2	2.3	2	5.2	6′	220	4.1	2.2	10.4
LPW: 86.8	13′	321.3	2.6	2.6	13′	213.4	3.5	3	7.5	10′	79.2	7	3.8	17.3
	16′	212.1	3.2	3.2	16′	140.8	4.3	3.8	9.2	12′	55	8.3	4.6	20.8
	D	FC	L	W	D	FC	L	W	CB	D	FC	L	W	CB
Wide Spot: 16°	4′	2671.8	0.8	0.8	4′	1758.6	1.1	1	2.3	2′	1464.1	1.6	0.8	3.5
CBCP: 42,748	7′	872.4	1.6	1.6	7′	574.2	2.1	1.8	4	4′	366	3.2	1.8	6.9
Lumens: 4248	9′	527.8	2	2	9′	347.4	2.7	2.4	5.2	6′	162.7	4.8	2.8	10.4
LPW: 89.4	13′	252.9	3	3	13′	166.5	4	3.6	7.5	10′	58.6	8.1	4.6	17.3
	16′	167	3.8	3.8	16′	109.9	4.9	4.4	9.2	12′	40.7	9.7	5.6	20.8
	D	FC	L	W	D	FC	L	W	CB	D	FC	L	W	CB
Narrow Flood: 25°	4′	1116.3	1.6	1.6	4′	751.9	2	1.8	2.3	2′	766.4	2.1	1.4	3.5
CBCP: 18,852	7′	364.5	2.8	2.8	7′	245.5	3.5	3.2	4	4′	191.6	4.4	2.8	6.9
Lumens: 4393	9′	220.5	3.6	3.6	9′	148.5	4.6	4	5.2	6′	85.2	6.7	4.2	10.4
LPW: 92.5	13′	105.7	5.2	5.2	13′	71.2	6.7	6	7.5	10′	30.7	11.2	7	17.3
	16′	69.8	6.4	6.4	16′	47	8.3	7.4	9.2	12′	21.3	13.5	8.4	20.8
	D	FC	L	W	D	FC	L	W	CB	D	FC	L	W	CB
Flood: 45°	4′	472.9	3	3	4′	366.2	3.1	3.2	2.3	2′	573.8	1.9	1.8	3.5
CBCP: 7,570	7′	154.4	5.2	5.2	7′	119.6	5.5	5.6	4	4′	143.5	3.9	3.8	6.9
Lumens: 4605	9′	93.4	6.8	6.8	9′	72.3	7	7.2	5.2	6′	63.8	5.9	5.8	10.4
LPW: 96.9	13′	44.8	9.8	9.8	13′	34.7	10.3	10.4	7.5	10′	23	9.8	9.6	17.3
	16′	29.6	12	12	16′	22.9	12.7	12.6	9.2	12′	15.9	11.8	11.6	20.8

Notes and Definitions
Beam spread is to 50% center beam candlepower (CBCP).
D= Distance in feet to floor or wall.
FC= Footcandles on floor or wall at center beam aiming location.
L= Effective Visual Beam length in feet (50% of maximum footcandle level)
W= Effective Visual Beam width in feet (50% of maximum footcandle level)
CB= Distance in feet across or down to center beam location

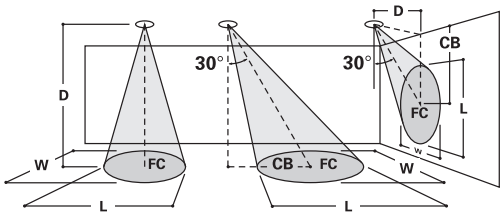

L802

Halo Span LED Wall Wash fixture family is designed for use as a downlight or wall wash. The Span LED luminaire is ideal for applications where a wide even distribution of light is desired. The luminaire can be used to wash a wall with light or as a downlight to evenly illuminate a counter. Utilizing LED technology and an electronic driver, it is extremely energy efficient.

Features

- Three finishes: White, Matte Black, Aluminum Haze
- 3000K and 4000K color temperatures
- 80+ CRI
- Lumen output: 2000, 3000, or 4000
- L70 and 50,000 hours
- Easy installation yields simple retrofit opportunities with various connector options
- Five-year limited warranty

Ordering Information

Sample Number: L80228030P

Track	Lamp Type	Series	Output	CRI	CCT	Finish	Voltage
L=Halo Power Trac and Lazer Track **LA**=Halo Architectural Track **LF**=Halo Architectural Flex Track **LJ**=Juno® Track[1] **LL**=Lightolier® Track[2] **L2G**=Global® TEK or HTEK[3]	**8**=LED	**02**=SPAN	**2**=2000 lm **3**=3000 lm **4**=4000 lm	**80**=80+	**30**=3000K **40**=4000K	**AH**=Aluminum Haze **MB**=Black (L and LA only) **P**=White (L and LA only)	**277**=277V (Only with LA and L2G) **[Blank]**=120V

NOTES: 1. Juno® T single circuit and 2-circuit track contact. Juno® is a registered trademark of Juno® Lighting. **2.** Lightolier® Lyfespan 6000 single circuit and 2 circuit track contact. Lightolier® is a registered trademark of Philips Lighting. **3.** Global® is a registered trademark of Nordic Aluminum.

Fixture is recommended for use with ceiling mount track systems only. For alternate mounting methods consult factory.

Dimensions

LF - Flexible Track

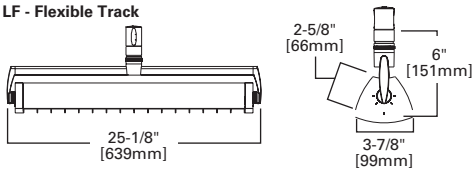

L - Power Trac

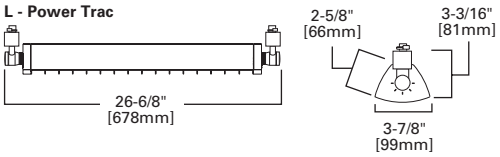

LA - Architectural Track

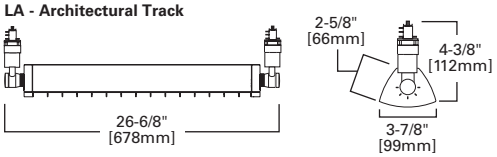

Photometry

High Output

CCT= 3000K
4000K Multiplier= 1.05

L80228030

Lumens: 2119
LpW: 85
120V Input Watts: 24.9
Line Amps: 0.209
Power Factor: >.99

0° Aiming Angle Horizontal Footcandles				30° Aiming Angle Horizontal Footcandles					30° Aiming Angle Vertical Footcandles on Wall				
D	FC	L	W	D	FC	L	W	CB	D	FC	L	W	CB
4	51	8.3	8.4	4	45	8.2	8.5	2.3	2	117	4.1	4.7	3.5
7	17	14.6	14.6	7	15	14.4	14.9	4	4	29	8.3	9.3	6.9
9	10	18.7	18.8	9	9	18.5	19.2	5.2	6	13	12.4	14	10.4
13	5	27	27.2	13	4	26.7	27.7	7.5	10	5	20.7	23.4	17.3
16	3	33.3	33.4	16	3	32.9	34.1	9.2	12	3	24.8	28	20.8

L80238030

Lumens: 3342
LpW: 90
120V Input Watts: 37.0
Line Amps: 0.31
Power Factor: >.99

D	FC	L	W	D	FC	L	W	CB	D	FC	L	W	CB
4	79	9.2	8.9	4	71	8.7	9.1	2.3	2	225	4.1	4.5	3.5
7	26	16.1	15.5	7	23	15.2	15.9	4	4	56	8.1	9.1	6.9
9	16	20.7	20	9	14	19.6	20.4	5.2	6	25	12.2	13.6	10.4
13	7	29.8	28.9	13	7	28.3	29.5	7.5	10	9	20.3	22.7	17.3
16	5	36.7	35.5	16	4	34.8	36.3	9.2	12	6	24.4	27.2	20.8

L80248030

Lumens: 4058
LpW: 83
120V Input Watts: 49.0
Line Amps: 0.41
Power Factor: >.99

D	FC	L	W	D	FC	L	W	CB	D	FC	L	W	CB
4	98	8.3	8.3	4	87	8.2	8.5	2.3	2	223	4.2	4.7	3.5
7	32	14.5	14.6	7	28	14.3	14.9	4	4	56	8.3	9.4	6.9
9	19	18.6	18.8	9	17	18.4	19.1	5.2	6	25	12.5	14.1	10.4
13	9	26.9	27.1	13	8	26.6	27.6	7.5	10	9	20.8	23.5	17.3
16	6	33.1	33.4	16	5	32.8	34	9.2	12	6	25	28.1	20.8

Notes and Definitions
Beam spread is to 50% center beam candlepower (CBCP).
D= Distance in feet to floor or wall.
FC= Footcandles on floor or wall at center beam aiming location.
L= Effective Visual Beam length in feet (50% of maximum footcandle level)
W= Effective Visual Beam width in feet (50% of maximum footcandle level)
CB= Distance in feet across or down to center beam location

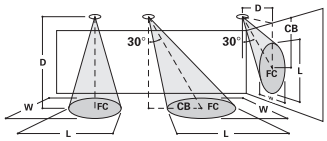

Stasis LED Large

The Stasis LED Large offers the high-intensity lighting often required for retail and grocery applications and can easily replace more traditional high-wattage CMH sources. The patented optical design yields clean patterns of light with optimal cut-off and minimized source brightness. A variety of optical packages and the ability to field change the distribution sets this luminaire apart from all other LED track fixtures. Clean lines and aesthetic design fit easily into all applications and become part of the design concept.

Features

- Three finishes: White, Matte Black, Aluminum Haze
- 3000K and 4000K color temperatures
- High 85 CRI
- Four field-changeable optical distributions:
  - Spot 15°
  - Narrow flood 25°
  - Flood 37°
  - Wall wash
- Wall wash luminaire is available in both 18W or 38W and ships with solite lens
- Easy installation yields simple retrofit opportunities with various connector options
- Superior light quality when compared to traditional light sources
- Five-year limited warranty

Ordering Information

Sample Number: L805LRGFL830P

Track	LED	Size	Beam	CRI	CCT	Finish	Voltage	Power	Accessories
L=Halo Power Trac and Lazer Track **LA**=Halo Architectural Track **LF**=Halo Architectural Flex Track **LJ**=Juno® Track[1] **LL**=Lightolier® Track[2] **L2G**=Global® TEK or HTEK[3]	**805**=805	**LRG**=Large 38W	**SP**=Spot 15° **NF**=Narrow Flood 25° **FL**=Flood 37° **WW**=Wall Wash	**8**=85	**30**=3000K **40**=4000K	**AH**=Aluminum Haze **MB**=Black (L and LA only) **P**=White (L and LA only)	**277**=277V (Only with LA and L2G) **[Blank]**=120V	**HO**=High Output (WW Beam only)	**L850**=Solite Lens Kit **L8SP**=15° Spot Optic Kit **L8NF**=25° Narrow Flood Optic Kit **L8FL**=37° Flood Optic Kit **L8WW**=Wall Wash Optic Kit

NOTES: 1. Juno® T single circuit and 2-circuit track contact. Juno® is a registered trademark of Juno® Lighting. **2.** Lightolier® Lyfespan 6000 single circuit and 2 circuit track contact. Lightolier® is a registered trademark of Philips Lighting. **3.** Global® is a registered trademark of Nordic Aluminum.

DesignLights Consortium® Qualified. Refer to www.designlights.org Qualified Products List under Family Models for details.

Fixture is recommended for use with ceiling mount track systems only. For alternate mounting methods consult factory.

Dimensions

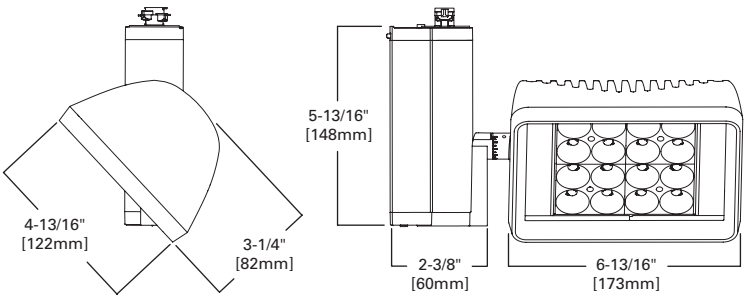

Photometry

High Output

CCT= 3000K

0° Aiming Angle Horizontal Footcandles

	D	FC	L	W
Spot: 15°	5.0	1110	2.0	2.0
CBCP: 27,741	7.5	493	3.0	3.0
Lumens: 2399	10.0	277	4.0	4.0
LPW: 64.1	12.5	178	5.0	5.0
	15.0	123	5.9	5.9
Narrow Flood: 25°	5.0	516	3.0	3.0
CBCP: 12,898	7.5	229	4.5	4.5
Lumens: 2383	10.0	129	5.9	5.9
LPW: 63.6	12.5	83	7.4	7.4
	15.0	57	8.9	8.9
Flood: 37°	5.0	227	4.7	4.7
CBCP: 5,669	7.5	101	7.1	7.1
Lumens: 2,319	10.0	57	9.4	9.5
LPW: 62.0	12.5	36	11.8	11.9
	15.0	25	14.1	14.2

30° Aiming Angle Horizontal Footcandles

	D	FC	L	W	CB
Spot: 15°	5.0	721	2.7	2.3	2.9
CBCP: 27,741	7.5	320	4.0	3.5	4.3
Lumens: 2399	10.0	180	5.4	4.7	5.8
LPW: 64.1	12.5	115	6.7	5.9	7.2
	15.0	80	8.1	7.0	8.7
Narrow Flood: 25°	5.0	343	3.9	3.5	2.9
CBCP: 12,898	7.5	152	5.8	5.2	4.3
Lumens: 2383	10.0	86	7.7	6.9	5.8
LPW: 63.6	12.5	55	9.7	8.7	7.2
	15.0	38	11.6	10.4	8.7
Flood: 37°	5.0	163	5.5	5.3	2.9
CBCP: 5,669	7.5	72	8.3	7.9	4.3
Lumens: 2,319	10.0	41	11.1	10.6	5.8
LPW: 62.0	12.5	26	13.9	13.2	7.2
	15.0	18	16.6	15.9	8.7

30° Aiming Angle Vertical Footcandles on Wall

	D	FC	L	W	CB
Spot: 15°	3.0	444	4.2	2.3	5.2
CBCP: 27,741	4.0	250	5.6	3.0	6.9
Lumens: 2399	5.0	160	7.0	3.8	8.7
LPW: 64.1	6.0	111	8.4	4.5	10.4
Narrow Flood: 25°	3.0	244	5.4	3.2	5.2
CBCP: 12,898	4.0	137	7.2	4.2	6.9
Lumens: 2383	5.0	88	9.0	5.3	8.7
LPW: 63.6	6.0	61	10.8	6.3	10.4
Flood: 37°	3.0	139	5.9	4.6	5.2
CBCP: 5,669	4.0	78	7.9	6.1	6.9
Lumens: 2,319	5.0	50	9.8	7.6	8.7
LPW: 62.0	6.0	35	11.8	9.2	10.4

Notes and Definitions

Beam spread is to 50% center beam candlepower (CBCP).
D= Distance in feet to floor or wall.
FC= Footcandles on floor or wall at center beam aiming location.
L= Effective Visual Beam length in feet (50% of maximum footcandle level)
W= Effective Visual Beam width in feet (50% of maximum footcandle level)
CB= Distance in feet across or down to center beam location

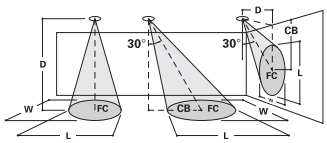

Wall Wash

High Output Wall Wash
Lumens: 2,052
LPW: 55.5

Single Fixture 3' From Wall Distance From Fixture Along Wall

DD	0	1	2	3	4	5
1	93	67	35	12	2	1
2	83	57	32	14	3	2
3	53	39	24	12	3	2
4	32	25	17	10	4	2
5	19	16	12	8	4	3
6	12	10	8	6	3	3
7	7	7	6	5	3	2
8	5	5	4	4	4	2
9	4	3	3	3	2	2
10	3	3	2	2	2	2

Multiple Fixtures 3' From Wall Spacing Between Fixtures

DD	4			5			6		
1	100	72	100	95	42	95	94	23	94
2	93	65	93	87	44	87	85	28	85
3	64	49	64	57	36	57	55	25	55
4	43	36	43	37	28	37	34	21	34
5	29	26	29	24	21	24	22	17	22
6	21	19	21	17	15	17	15	13	15
7	15	14	15	12	12	12	11	10	11
8	11	11	11	9	9	9	8	8	8
9	9	9	9	7	7	7	6	6	6
10	7	7	7	6	6	6	5	5	5

Notes

- Illuminance values for multiple fixtures are based upon the center two units of a four unit array. Footcandle values are centerline of fixtures and centered between fixtures.1 footcandle = 10.76 lux. 1 foot(') = 304.8mm.
- Illuminance values are cosine corrected initial value with no contribution from inter reflections from other room surfaces. Total illumination may increase from contributions from other surfaces.
- Changing fixture spacing will affect illuminance level.

$$\frac{\text{Existing Spacing}}{\text{New Spacing}} \times \text{Average Table Fc Level}$$

- 38W Multiplier = .5

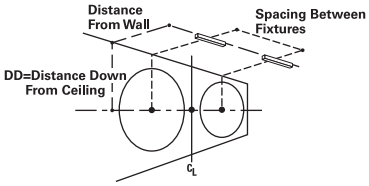

Stasis LED Small and Medium

The Stasis LED Small and Medium luminaire are perfect for those applications where performance is required from a discreet source. This fixture family can effortlessly replace traditional halogen and CMH light sources while yielding up to 85% energy and maintenance savings. Tight optical control provides superior light quality and precise aiming with minimal spill light. Stasis LED stands in a league all its own.

Features

- Three finishes: White, Matte Black, Aluminum Haze
- 3000K and 4000K color temperatures
- High 85 CRI
- Four optical distributions
  - Spot 9°
  - Wide Spot 15°
  - Narrow Flood 25°
  - Flood 40°
- ELV dimmable to 15%
- Easy installation yields simple retrofit opportunities with various connector options
- Superior light quality when compared to traditional light sources
- Five-year limited warranty

Ordering Information

Sample Number: L805MEDFL830P

Track	LED	Size	Beam	CRI	CCT	Finish	Voltage	Accessories
L=Halo Power Trac and Lazer Track **LA**=Halo Architectural Track **LF**=Halo Architectural Flex Track **LJ**=Juno® Track[1] **LL**=Lightolier® Track[2] **L2G**=Global® TEK or HTEK[3]	**805**=805	**SML**=Small 8W **MED**=Medium 17W	**SP**=Spot 9° **WS**=Wide Spot 15° **NF**=Narrow Flood 25° **FL**=Flood 40°	**8**=85	**30**=3000K **40**=4000K	**AH**=Aluminum Haze **MB**=Black (L and LA only) **P**=White (L and LA only)	**277**=277V (Only with LA or HTEK) **[Blank]**=120V	**LM10530**=Media Holder

NOTES: 1. Juno® T single circuit and 2-circuit track contact. Juno® is a registered trademark of Juno® Lighting. **2.** Lightolier® Lyfespan 6000 single circuit and 2 circuit track contact. Lightolier® is a registered trademark of Philips Lighting. **3.** Global® is a registered trademark of Nordic Aluminum.

DesignLights Consortium® Qualified. Refer to www.designlights.org Qualified Products List under Family Models for details.

Fixture is recommended for use with ceiling mount track systems only. For alternate mounting methods consult factory.

Dimensions

Small

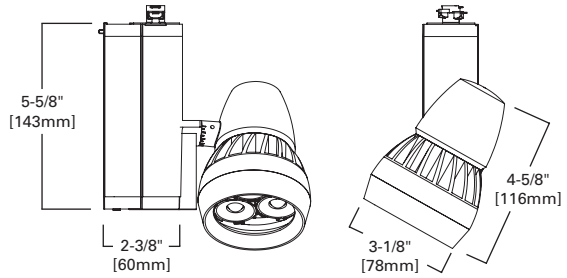

Medium

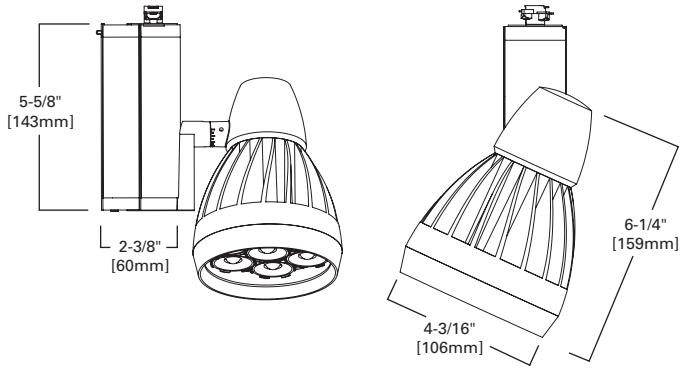

Photometry

Small

CCT= 3000K
4000K Multiplier= 1.25

0° Aiming Angle
Horizontal Footcandles

Spot: 9°
CBCP: 14,627
Lumens: 436
LPW: 55.2

D	FC	L	W
5.0	585	0.8	0.8
7.5	260	1.1	1.1
10.0	146	1.5	1.5
12.5	94	1.9	1.9
15.0	65	2.3	2.3

Wide Spot: 15°
CBCP: 5,238
Lumens: 449
LPW: 56.8

D	FC	L	W
5.0	210	1.4	1.4
7.5	93	2.1	2.1
10.0	52	2.8	2.8
12.5	34	3.5	3.5
15.0	23	4.2	4.2

Narrow Flood: 25°
CBCP: 1,186
Lumens: 384
LPW: 46.3

D	FC	L	W
5.0	47	2.6	2.6
7.5	21	3.9	3.9
10.0	12	5.2	5.2
12.5	8	6.5	6.5
15.0	5	7.8	7.8

Flood: 40°
CBCP: 1,044
Lumens: 391
LPW: 49.5

D	FC	L	W
5.0	42	2.9	2.9
7.5	19	4.4	4.4
10.0	10	5.8	5.8
12.5	7	7.3	7.3
15.0	5	8.8	8.8

Medium

CCT= 3000K
4000K Multiplier= 1.25

0° Aiming Angle
Horizontal Footcandles

Spot: 9°
CBCP: 39,188
Lumens: 999
LPW: 58.1

D	FC	L	W
5.0	1568	0.7	0.7
7.5	697	1	1
10.0	392	1.4	1.4
12.5	251	1.7	1.7
15.0	174	2	2

Wide Spot: 15°
CBCP: 14,251
Lumens: 994
LPW: 58.1

D	FC	L	W
5.0	570	1.3	1.3
7.5	253	2	2
10.0	143	2.7	2.7
12.5	91	3.3	3.3
15.0	63	4	4

Narrow Flood: 25°
CBCP: 4,198
Lumens: 903
LPW: 51.6

D	FC	L	W
5.0	198	1.8	1.8
7.5	88	2.7	2.7
10.0	49	3.6	3.6
12.5	32	4.5	4.5
15.0	22	5.4	5.4

Flood: 40°
CBCP: 2,350
Lumens: 921
LPW: 54.5

D	FC	L	W
5.0	42	2.9	2.9
7.5	19	4.4	4.4
10.0	10	5.8	5.8
12.5	7	7.3	7.3
15.0	5	8.8	8.8

Notes and Definitions
Beam spread is to 50% center beam candlepower (CBCP).
D= Distance in feet to floor or wall.
FC= Footcandles on floor or wall at center beam aiming location.
L= Effective Visual Beam length in feet (50% of maximum footcandle level)
W= Effective Visual Beam width in feet (50% of maximum footcandle level)
CB= Distance in feet across or down to center beam location

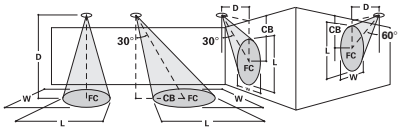

Track Systems

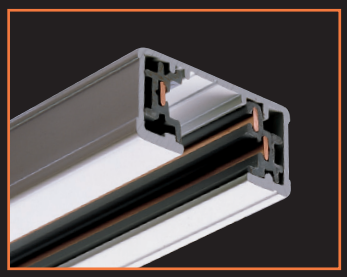

Miniature Track

Miniature track provides versatility for every lighting need.

Decorator finishes, push-in connectors and economy all combine to make single-circuit track perfect for residential or commercial use.

L650 2' Track - 20-1/8" (511mm).

L651 4' Track - 44-1/8" (1121mm).

L652 8' Track - 92-1/8" (2340mm).

L653 12' Track - 140-1/8" (3559mm).

Finishes: White (P), Black (MB), Silver (SL)

Size
11/16" (17.5mm) D by 1-3/8" (35mm) W

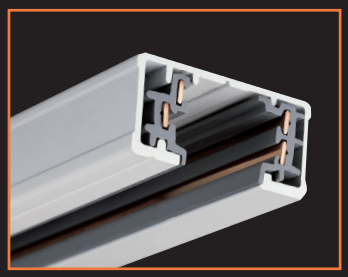

Halo-2 Power-Trac

Halo-2 Power-Trac has two circuits for greater system flexibility.

Halo-2 Power-Trac system provides two separate 20 AMP circuits. Each circuit can be independently switched. Suitable for commercial, merchandising and residential applications.

L641 4' Track - 42-5/8" (1083mm).

L642 8' Track - 90-5/8" (2302mm).

L643 12' Track - 138-5/8" (3521mm)

Finish: White (P), Black (MB), Silver (SL)

Size
11/16" (17.5mm) D by 1-3/8" (35mm) W

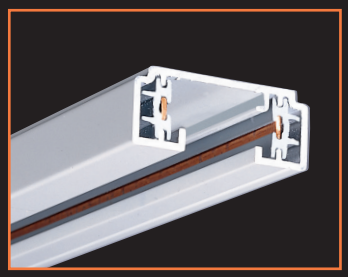

Lazer Track

Lazer track offers economy and convenience.

LZR102 2' Track - 20-1/8" (511mm).

LZR104 4' Track - 44-1/8" (1121mm).

LZR106 6' Track - 68-1/8" (1730mm).

LZR108 8' Track - 92-1/8" (2340mm).

Finishes: White (P), Black (MB)

The Lazer two-conductor track is available in two finishes and 4 lengths. The overall height is only 9/16" with a decorative reveal at the ceiling line.

Size
9/16" (14mm) D by 1-3/8" (35mm) W

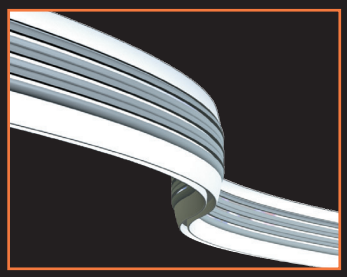

Halo Flexible Track

Halo flexible track is the ultimate in aesthetic, mechanical and electrical versatility.

LF4AH 4' Track

LF4AH 8' Track

Finish: Aluminum Haze (AH)

Halo flexible track is a three circuit, bendable track system. There are two 120V / 20A circuits with dedicated neutrals, as well as a third 12V / 25A circuit. The track can be used as either a stand-alone 120V or 12V system, or a combination of both. Each circuit can be independently switched. The system is suitable for a wide range of commercial, merchandising and residential applications.

Size
1-1/2" (39mm) H and 7/16" (12mm) W

See www.cooperlighting.com for compatible connectors.

Cooper Lighting Solutions
1121 Highway 74 South
Peachtree City, GA 30269
P: 770-486-4800
www.halolighting.com

Canada Sales
5925 McLaughlin Road
Mississauga, Ontario L5R 1B8
P: 905-501-3000
F: 905-501-3172

Our Lighting Product Lines
Ametrix
AtLite
Corelite
Ephesus
Fail-Safe
HALO
HALO Commercial
Invue
io
IRiS
Lumark
Lumière
McGraw-Edison
Metalux
MWS
Neo-Ray
Portfolio
RSA
Shaper
Streetworks
Sure-Lites

Our Controls Product Lines
Fifth Light Technology
Greengate
iLight (International Only)
iLumin
Zero 88

Connected Lighting Systems
Distributed Low-Voltage Power
HALO Home
iLumin Plus
LumaWatt Pro
WaveLinx

Cooper Lighting Solutions
1121 Highway 74 South
Peachtree City, GA 30269
P: 770-486-4800
cooperlighting.com

Canada Sales
5925 McLaughlin Road
Mississauga, Ontario L5R 1B8
P: 905-501-3000
F: 905-501-3172

© 2021 Cooper Lighting Solutions
All Rights Reserved
Printed in USA
Publication No. BR518029EN
June 3, 2021 9:07 AM

Cooper Lighting Solutions is a registered trademark.

All other trademarks are property of their respective owners.

Product availability, specifications, and compliances are subject to change without notice.