SERIES 3000
TYPE Y OR Z
RAPID EXCHANGE® PURGING KITS
INSTALLATION & OPERATION MANUAL

MODEL 3003
CLASS I APPLICATIONS
90 Cubic Feet Maximum

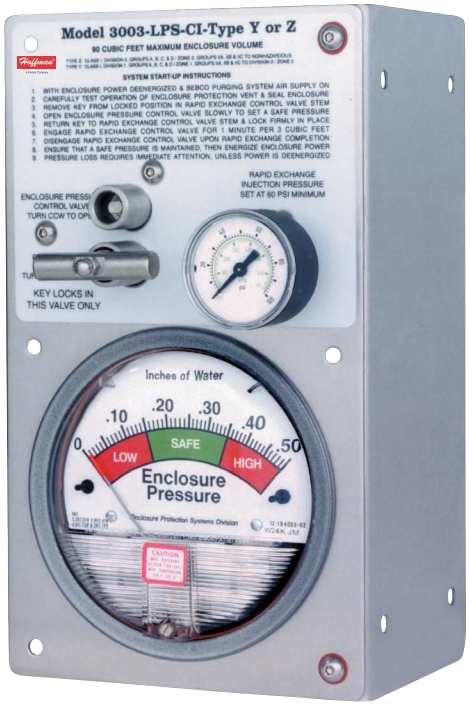

Model 3003-LPS-CI-YZ-VML
Vertical Mount Configuration
Front View

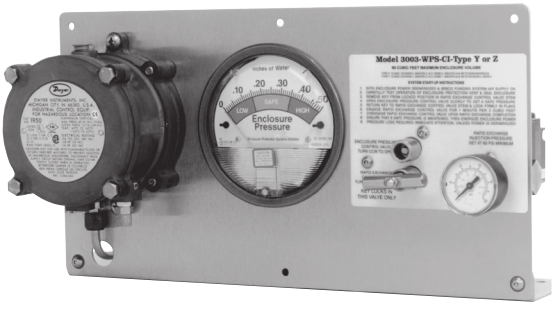

Model 3003-WPSA-CI-YZ-HMT
Horizontal Mount Configuration
Front View

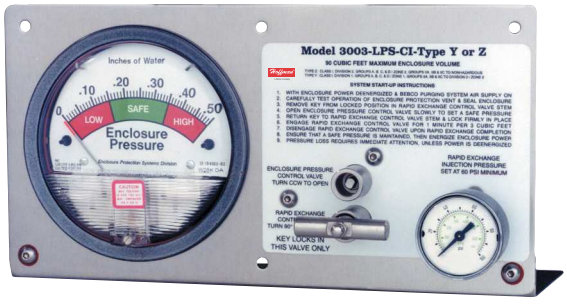

Model 3003-LPS-CI-YZ-HMT
Horizontal Mount Configuration
Front View

Accessories Supplied with Each Kit

Manufactured by:
PEPPERL+FUCHS
1600 Enterprise Parkway • Twinsburg, Ohio 44087

© 2010 Pepperl+Fuchs® Inc., Twinsburg, Ohio
512782, Dwg No. 129-0215D, Printed in U.S.A

nVent HOFFMAN
2100 Hoffman Way
Anoka, Minnesota 55303
PH 763 422 2211
nVent.com/HOFFMAN
Hoffman P/N #87752302

Table of Contents

Page 2 **System Purpose and Description**
Purpose, System Description, Important Notes

Page 3 **Identifying Your System**
Defines specific features of the system

Page 4 **General Information**
System & Material Specifications, Spare Parts, Tools & Test Equipment, System Accessories

Page 5 **Enclosure and Device Design**
Design Requirements, Adjacent Enclosures, Device Ventilation, Temperature Limitations

Page 6 **Getting Started**
Establishing Connection Sizes, Determining Enclosure Inlet & Outlet Connection Locations

Page 7 **VM & HM Mounting**
Flange & Face Plate Mounted Installations

Page 8 **CK / RCF Mounting**
GCK Procedure, CK Configuration Mounting Procedure, RCF Enclosure Mounting Procedure

Page 9 **Required Hardware Mounting**
Required Enclosure Protection Vent, Warning Nameplates

Page 10 **System Mounting Dimensions**
Face Plate & Component Dimensional Diagrams

Page 11 **System Mounting Dimensions**
Face Plate & Component Dimensional Diagrams

Page 12 **System Installation Details**
Typical Internal & External Installation Diagrams

Page 13 **Pneumatic Tubing Requirements**
Protective Gas Supply Requirements, Pneumatic Connection Requirements

Page 14 **Tubing Installation**
Surface, Pipe, Frame & Panel Mount Installations

Page 15 **Tubing Connection Diagrams**
Surface, Pipe, Frame & Panel Mount Installation Connection Points, Pneumatic Diagrams

Page 16 **Electrical Supply Requirements**
Wiring Requirements, Enclosure Power & Alarm Signal, Enclosure Wiring Methods & Connections

Page 17 **Conduit Installation**
Electrical & WPS Style Conduit and Connection Parts

Page 18 **Set-Up Procedure**
Important Notes, Class I Purging Set-up

Page 19 **Operating Sequence**
Class I Purging Operation

Page 20 **Troubleshooting Procedures**
Troubleshooting Chart

Page 21 **Warranty and Liability Statement**
Warranty Notes, General Terms, Limitations

Page 22 **System Maintenance**
Regular Maintenance, Long Term Maintenance, Maintenance Schedule

Page 23 **System Maintenance**
Maintenance Schedule

Page 24 **Systems Identification & Application Information**

Purpose

The Enclosure Protection System's purpose is to allow the use of general purpose or non-rated electrical or electronic devices, with exception to devices which produce excessive heat, utilize combustible gas, or expose arcing contacts to the hazardous atmosphere, in Type 4 or 12 enclosures in the place of explosion proof Type 7 enclosures. Other purposes include heat, moisture and dust contamination prevention.

Description

Series 3000 is a Rapid Exchange® purging assembly which operates on a supply of compressed instrument air or inert gas. It is designed to regulate and monitor pressure within one or more sealed (protected) enclosures, in order to rapidly remove and prevent flammable vapor accumulation within the enclosure(s). The system is designed to accomplish the required air exchanges and maintain a "safe" pressure on one or more protected enclosures. A Model EPV Enclosure Protection Vent is required for proper operation. This process reduces the hazardous (classified) area rating within the enclosure(s), in accordance with the NEC - NFPA 70, Article 500, NFPA 496, ISA12.4 and IEC 600 79-15, EN50021.

Important Notes

One (1) permanent file copy and one (1) operations copy of this Manual must be studied and retained by the operator of this system. User's Agents are responsible for transferring this Manual to the user, prior to start-up.

The contents of this manual have been arranged to allow the use of this product as a stand-alone device on equipment and enclosures supplied by the user or its agents. The Manual's parameters encompass a combination of both National Fire Protection Association (NFPA) requirements and Pepperl+Fuchs requirements. Pepperl+Fuchs therefore acknowledges the use of NFPA 496 as a guideline, that we have enhanced certain NFPA requirements and that additional information has been compiled to complete this document. The Manual is intended as a complete guide and must be considered, unless specifically stated otherwise, that all directives contained herein are Pepperl+Fuchs requirements for safe, practical and efficient use of this product.

This system is not intended for use to protect enclosures or devices which contain ignitable concentrations of gases or vapors. This exclusion generally applies to process or product analyzing systems equipment.

All specifications are subject to change without notice.

Copyright Pepperl+Fuchs

Pepperl+Fuchs Group www.pepperl-fuchs.com
USA: +1 330-486-0002 pa-info@us.pepperl-fuchs.com
Germany: +49 621-776-2222 pa-info@de.pepperl-fuchs.com
Singapore: +65-6779-9091 pa-info@sg.pepperl-fuchs.com

PEPPERL+FUCHS
PROTECTING YOUR PROCESS

Identifying Your System

This Enclosure Protection System is offered in various configurations. For proper installation and operation, examine the System markings to identify the System Style, Area Classifications, Zone Ratings and Types, as noted below.

SERIES MODEL NUMBER

3003 - 3/8" Protective Gas Supply

SYSTEM STYLE

LPS **- L**ess **P**ressure **S**witch

WPSA- With Pressure Switch

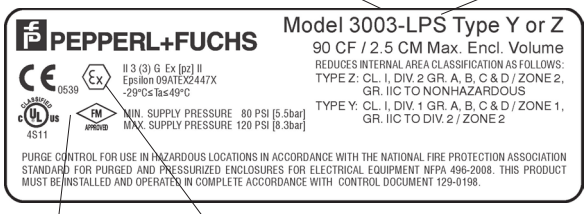

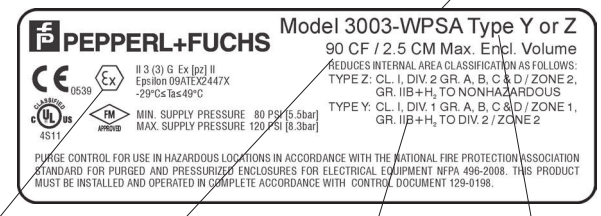

ATEX CERTIFICATION

APPROVAL MARKINGS & DEFINITIONS

Identifies the current third party approvals for this system. These markings are located on the back of the system, affixed to the system manifold.

MAXIMUM TOTAL ENCLOSURE VOLUME

Defines total protected enclosure(s) volume capacity for this particular model.

Model **3003** - 90 CF / 2.5 CM

AREA CLASSIFICATION

Defines the area classification(s) for which the system is suitable for operation

SYSTEM TYPE

Type Z

Reduces the internal enclosure area Division/Zone rating from Division 2/Zone 2 to nonhazardous

Type Y

Reduces the internal enclosure area Division/Zone rating from Division 1/Zone 1 to Division 2/Zone 2

Important Note

NOTE: LPS style requires additional customer-supplied alarming for ATEX applications

To assist you through the installation and operation of your pressurization / purge system, Pepperl+Fuchs, Incorporated has provided the following information boxes throughout this manual. This information is intended to clarify certain differences between the model styles and configurations and to warn the user / installer of potential dangers of electrical shock or enclosure over pressurization.

HELPFUL HINT

IMPORTANT NOTE

WARNING

General Information

System Specifications

System Dimensions:	See page 10
Shipping Weight (lbs.):	approx. 10
Operating Temperature Range:	-20° F - 120° F
Supply Pressure Range:	80 - 120 PSI max.
Capacity & Filtration (VM only): 3003:	1.5 Oz. @ 20 Microns
Supply Requirements:	Clean Air or Inert Gas
Safe Pressure Setpoint:	0.25"
Safe Pressure Flowrate:	* 0.1 - 3.5 SCFH / Cu Ft
Maximum Exchange Pressure:	* 3" - 5"
Minimum Exchange Flowrate:	
Model 3003:	** 12 SCFM / 720 SCFH
Exchange Times:	
Model 3003:	
4 Volume Exchanges:	1 Minute / 3.0 Cubic Ft.
5 Volume Exchanges:	1 Minute / 2.4 Cubic Ft.
System Supply Port:	
Model 3003:	1/4" FPT
Enclosure Supply Port:	1/2" FPT
Enclosure Reference Fitting:	1/4" Tube

* Enclosure integrity determines actual flow and pressure

** With regulator set at 60 PSI min. during exchange

Exchange Flow rating is based on safety factors considered after extensive factory testing and does not reflect actual flow. Flow was measured upstream of system with an electronic flowmeter on a five cubic feet enclosure. The system was installed with tubing that exceeded the maximum allowable linear length and quantity of bends listed in this manual for system supply, enclosure supply and enclosure reference connections. The system was tested in conjunction with a Model EPV Enclosure Protection Vent, mounted directly on the test enclosure.

Material Specifications

Regulator Body:	Zinc w/ Enamel Finish
Regulator Handle & Filter Bowl (VM only):	Polycarbonate
Enclosure Pressure Gauge:	Alum. w / Enamel Finish
Rapid Exchange Gauge:	Poly Case & Nickel Plated Tube
Tube Fitting:	316 SS Forged Body
Tubing:	316 SS 1/4" .035 Welded
Fastener Hardware:	Aluminum & Stainless Steel
System Face Plate:	316 14 Ga #3 Brush SS
System Mounting Flange:	316 SS Tumble Finish
Manifold Body:	Anodized Aluminum
Manifold Valves:	316 SS
Manufacturer ID Nameplate:	Photo Anodized Aluminum
System Start Up Instructions :	Silkscreened Lexan®
Enclosure Warning Nameplate:	Silkscreened SS

Lexan® is a registered trademark of the General Electric Company

Recommended Spare Parts

Qty	Description	Part # (supercedes)
1	Enclosure Pressure Indicator-CI	510023 001000
1	System Regulator (Model 3003)	510056 002037
1	System Regulator (Model 3004)	510073 002137
1	Rapid Exchange® Pressure Gauge	510078 002300
1	T-Bar Valve Key	510092 002740
1	Installation & Operation Manual	129-0215

Please call and reference part number above for current spare parts pricing. Immediate pricing is available to all confirmed customers.

Installation Tools & Testing Equipment

1/2" chuck drill, Complete set of drill bits
Complete set of tubing, conduit bending, instrument fitting and electrical craftsman hand tools
0-10" differential pressure indicator or monometer (connected to the protected enclosure to measure maximum pressure)
Model 3003:
1 1/4" conduit knockout or 1.6875" hole saw

Series 3000 System Accessories

Enclosure Protection Vents

ONE REQUIRED WITH EACH SYSTEM

For use with Model 3003:

EPV-3-SA-00	Straight w/ Spark Arrestor
EPV-3-SA-90*	Rt Angle w/ Spark Arrestor

Additional Items**

SMK-1*	System Mounting Kit - Flange
SMK-6m*	System Mounting Kit - Frame / Panel
PMK-1	Pipe Mounting Kit
ILF-4	1/4" In-Line Filter
RCF-4	1/4" Remote Mount Cube Filter
RCF-8	1/2" Remote Mount Cube Filter
GCK	Gauge Conversion Kit
GPSK-1	General Purpose Switch Kit
EPSK-1	Class I, Gr. C & D Exp. Proof Switch Kit
EPSK-1A	Class I, Gr. A - D Exp. Proof Switch Kit
GBSK	Class I, Gr. B - D Exp. Proof Switch Kit
RAH	Div. 1 Remote Alarm Horn
RAB-1	Div. 1 Remote Alarm Beacon
RAB-2	Div. 2 Remote Alarm Beacon
LCK	L Fitting Conduit Kit
TCK	T Fitting Conduit Kit

* These items are provided as part of the Hoffman Kit.

** Accessory items are available through Bebco Industries. Please consult the Pepperl+Fuchs Customer Service Department for suitability of items for this assembly before purchase.

Subject to modifications without notice
Copyright Pepperl+Fuchs
Pepperl+Fuchs Group www.pepperl-fuchs.com
USA: +1 330-486-0002 pa-info@us.pepperl-fuchs.com
Germany: +49 621-776-2222 pa-info@de.pepperl-fuchs.com
Singapore: +65-6779-9091 pa-info@sg.pepperl-fuchs.com
PEPPERL+FUCHS
PROTECTING YOUR PROCESS

Enclosure & Device Design

Enclosure Design Requirements

1. All windows must be shatterproof and sized as small as possible.
2. All NFPA 496 required markings must be placed on or near **all** enclosure doors and covers.
3. The enclosure must withstand an internal pressure of ten (10) inches of water without sustaining permanent deformation and resist all corrosive elements in the surrounding atmosphere.
4. All lightweight objects in the enclosure, such as paper or insulation, must be firmly secured.
5. The enclosure should be constructed from materials such as metal or anti-static polycarbonate to meet or exceed Type 4 or 12 performance requirements, but does not require third party approval.
6. The installation of obstructions or other barriers which block or impede the flow of protective gas must be avoided.
7. The creation of air pockets or other areas which trap flammable gases within the enclosure or devices must be avoided.
8. The enclosure should be located in an area where impact hazards are minimal.
9. If the enclosure is nonmetallic and contains equipment which utilizes or switches power loads greater than 2500 VA, it must be constructed from substantially noncombustible materials, such as materials designed to meet or exceed ANSI/UL94 ratings of 94 V-0 or 94 5V.

Adjacent Enclosures

1. Adjacent enclosures must be protected by one of the following means:
   a) purged or pressurized in series with the protected enclosure;
   b) purged or pressurized separately; or
   c) protected by other means; e.g. explosion proof enclosures, hermetically sealed devices or intrinsic safe circuits.
2. Adjacent purged or pressurized enclosures must be designed to meet all construction requirements above.

Total Volume Calculation

1. The total volume of all pressurized enclosures, devices and wireways must be considered.
2. All enclosure, device and wireway volumes must be calculated without consideration of internally consumed space.

Device Ventilation

1. Enclosed devices within the protected enclosure which do not exceed 1.22 cubic inches of free volume do not require ventilation to the protected enclosure.
2. If the free volume of an internal device exceeds 1.22 cubic inches it must be protected by one of the following means:
   a) ventilated on the top and bottom sides with one (1) square inch of opening for each four hundred (400) cubic inches of volume within the internal protected enclosure, at a minimum diameter of one (1) quarter inch;
   b) purged in series with the protected enclosure or be purged separately; or
   c) protected by other means; e.g. explosion proof enclosures, hermetically sealed devices or intrinsic safe circuits.

Temperature Limitations

1. The enclosure must have no surface area which exceeds 80 percent of the flammable or ignitable substance's auto-ignition temperature.
2. Internal devices which exceed this temperature must be protected by one of the following manners.
   a) The device is enclosed in a chamber which is cUL or FM listed as a hermetically sealed device which prohibits the entrance of flammable or ignitable substance, and maintains a surface temperature below temperature limits.
   b) It can be proven by testing that the devices will not ignite the substance involved.
   c) The device is purged in a separate enclosure that bears a model ETW (Enclosure Temperature Warning Nameplate). Devices may only be accessed after power has been removed and the device has been allowed to cool to safe temperature, or the area is positively known to be nonhazardous.

Getting Started

Establishing Connection Sizes, Lengths & Bends

TYPICAL SINGLE PROTECTED ENCLOSURE CONNECTIONS

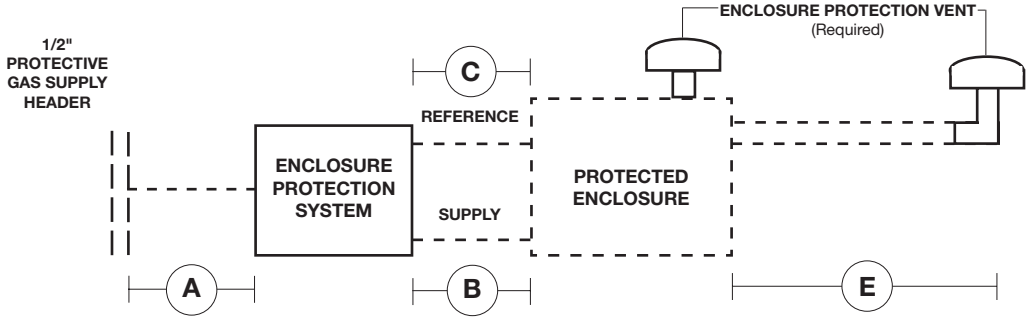

***NOTE: TUBE AND PIPE SIZES ARE TRADE SIZES AND ARE NOT EQUAL IN INSIDE DIAMETER. DO NOT SUBSTITUTE TUBE FOR PIPE WITH SAME TRADE SIZE.**

Model 3003 Systems	A System Supply	B Enclosure Supply	C Enclosure Reference	D Multi - Enclosure Connections	E Optional Remote Venting
*Tubing or Pipe Diameter Tubing & Pipe Must Be Fully Reamed	3/8" O.D. Tubing or 1/4" I.D. Pipe	3/8" O.D. Tubing or 1/2" I.D. Pipe	1/4" O.D. Tubing Fully Reamed	1 1/4" I.D. Pipe Fully Reamed	1 1/4" I.D. Pipe Fully Reamed
Maximum Tubing / Pipe Length and Maximum Number of Bends / Elbows	20 Feet 10 Bends	5 Feet 5 Bends	20 Feet 10 Bends	10 Feet 5 Elbows	30 Feet 5 Elbows

TYPICAL MULTIPLE PROTECTED ENCLOSURE CONNECTIONS

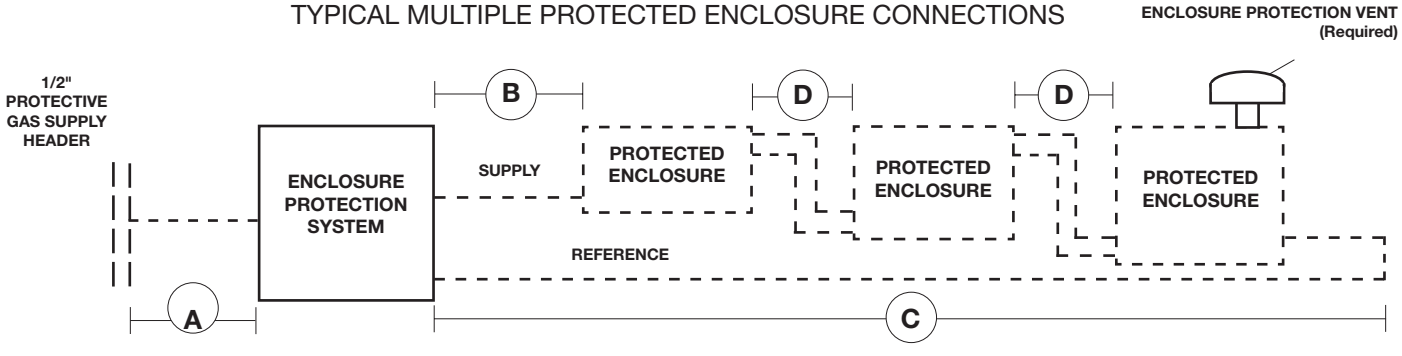

HELPFUL HINTS

To ensure adequate protective gas flow to the protected enclosure(s), all piping and tubing must be fully reamed.

Precautions must be taken to prevent crimping and other damage to protective gas piping and tubing.

When protecting multiple enclosures with a single enclosure protection system, the enclosures must be connected in series from the smallest to the largest to ensure adequate protective gas flow.

Determining Enclosure Inlet & Outlet Connection Locations

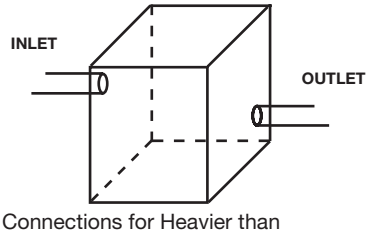

Connections for Heavier than Air Gases and Vapors

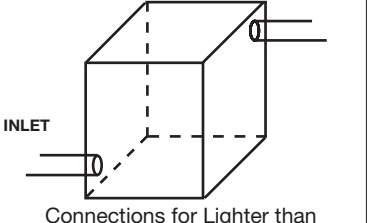

Connections for Lighter than Air Gases and Vapors

HELPFUL HINTS

If flammable gases are lighter than air, the inlet connection to each enclosure must enter near a bottom corner. The outlet connection, for the required enclosure protection vent or piping to an adjacent protected enclosure, must exit near an extreme opposite top corner.

If flammable gases are heavier than air, inlet and outlet connections must be reversed.

In all cases, the most prevalent gas must determine the location of inlet and outlet connections.

Subject to modifications without notice
Copyright Pepperl+Fuchs
Pepperl+Fuchs Group
www.pepperl-fuchs.com
USA: +1 330-486-0002
pa-info@us.pepperl-fuchs.com
Germany: +49 621-776-2222
pa-info@de.pepperl-fuchs.com
Singapore: +65-6779-9091
pa-info@sg.pepperl-fuchs.com
PEPPERL+FUCHS
PROTECTING YOUR PROCESS

VM & HM Mounting

IMPORTANT NOTES

The system should be mounted at EYE LEVEL.

Care must be taken to ensure the system and all protruding components are clear of all enclosure accesses (doors and covers) and conduit, pipe, tubing or cable entries.

Flange mounted systems are intended for mounting adjacent to the protected enclosure and are also suitable for 2" schedule 40 pipe mounting.

Dimensional mounting configuration diagrams are located on page 10.

Remove and save the clear plastic envelope containing the enclosure warning nameplate.

Although all systems are factory tested and calibrated, we strongly suggest a bench test of basic functions prior to installation.

Flange Mounted Systems

First, determine the system mounting flange to system face plate orientation for your installation (top or bottom for HM configurations, left or right for VM configurations).

Surface Mounting Systems

1. Transfer hole pattern of system mounting flange to intended enclosure or adjacent mounting surface.
2. Secure system mounting flange to system face plate using the mounting hardware provided.
3. Check for obstructions hindering bolt fastening, drill and ream the mounting holes before mounting the system.
4. Secure the system to the enclosure, or other mounting surface, using one (1) Model SMK-1 supplied with kit or equivalent - four (4) 1/4" x 3/4" stainless steel bolts, nuts and lock washers.

Pipe Mounting Systems

1. Secure system mounting flange to system face plate using the mounting hardware provided.
2. Locate 2" schedule 40 pipe within five (5) feet of protected enclosure.
3. Ensure system is mounted in a true vertical position, secure the system to pipe, using one (1) Model PMK-1 or equivalent - two (2) 1/4" x 2" pipe stainless steel “U” bolts, nuts and lock washers.

Face Plate Mounted Systems

HELPFUL HINTS

Frame Mount (FM) and Panel Mount (PM) installations are designed to mount through a cutout one half (1/2) inch smaller than the overall height and width of the system face plate, using clips and fasteners provided with Model SMK-6m. This design eliminates the need to drill the system mounting bolt holes in the mounting surface.

FM installations are intended for operation adjacent to the protected enclosure.

PM installations are intended for mounting through a cutout directly in the protected enclosure surface. PM installations require a Model GCK Gauge Conversion Kit for proper operation (see page 8 for conversion instructions).

1. Transfer panel cutout pattern to the intended surface.
2. Check for obstructions which could prohibit bolt fastening or system pneumatic connections.
3. Cut panel cutout pattern on the intended surface.
4. Deburr all cutout surfaces.
5. Secure system to surface using Model SMK-6m, supplied with kit, or equivalent - six (6) 5mm x 12mm stainless steel nuts, bolts, mounting clips and lock washers.
6. Go to page 8 for RCF installation (if provided).

Typical Surface, Pipe, Panel & Frame Mounted Systems

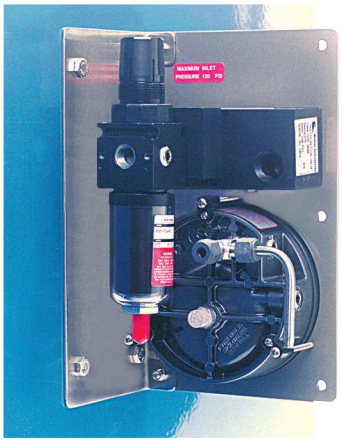

Model A-3003YZVM Flange Mounted to Flat Vertical Surface with Model SMK-1 Fastener Kit

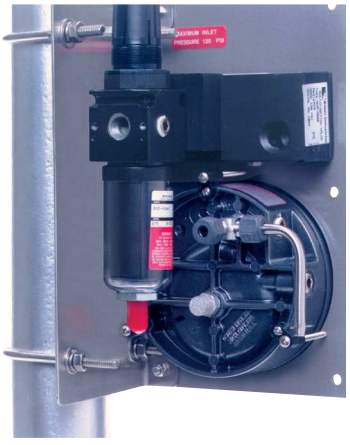

Model A-3003YZVM Flange Mounted to Vertical 2" Pipe Stand with Model PMK-1 Fastener Kit

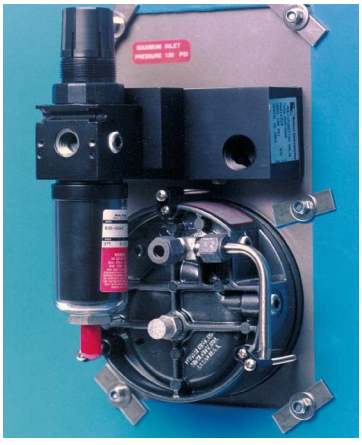

Model A-3003YZVM Frame or Panel Mounted through Cutout in Suitable Surface with Model SMK-6m Fastener Kit

CK & RCF Mounting

HELPFUL HINTS

Series 3000 purging systems are supplied in several configurations to meet your installation needs. When ordered as a VM or HM configuration, the system face plate can be mounted directly through the surface of a pressurized enclosure (see page 7 Face Plate Mounted Systems). When ordered as a CK configuration, the system components mount directly through panel cutouts (provided by others) adjacent or external to the pressurized enclosure. In addition, the CK configuration can also be mounted directly through the surface of a pressurized enclosure when modified with Model GCK Gauge Conversion Kit (see "Panel Mount Conversion Procedure" below).

Care must be taken to ensure the system and all protruding components are clear of all enclosure accesses (doors and covers) and conduit, pipe, tubing or cable entries.

Dimensional component diagrams are located on page 10.

Remove and save the clear plastic envelope containing the enclosure warning nameplate.

Although all systems are factory tested and calibrated, we strongly suggest a bench test of basic functions prior to installation.

Panel Mount Conversion Procedure

Perform the following procedure to convert Enclosure Pressure Gauge for Panel Mount (PM) installations.

1. Secure one Model GCK Gauge Conversion Kit. Kit includes one (1) PRB-4 & SC-2 Fitting and one (1) Enclosure Pressure Gauge gasket.
2. Remove Enclosure Pressure Gauge and install gauge gasket between gauge and mounting surface. Reinstall gauge.
3. Remove venturi orifice and run tee from high port located on rear of Enclosure Pressure Gauge, discard.
4. Remove sintered vent from low port located on rear of Enclosure Pressure Gauge.
5. Reinstall sintered vent into high port located on rear of the Enclosure Pressure Gauge.
6. Remove stainless steel orifice plug from low port located on side of Enclosure Pressure Gauge.
7. Reinstall stainless steel orifice plug into low port located on rear of Enclosure Pressure Gauge.
8. Install Model SC-2 fitting into low port located on side of Enclosure Pressure Gauge.
9. Install Model PRB-4 vent through enclosure surface (vent end out) and connect tubing (furnished by others) between SC-2 & PRB-4 fittings.

Typical Panel Mount Conversion

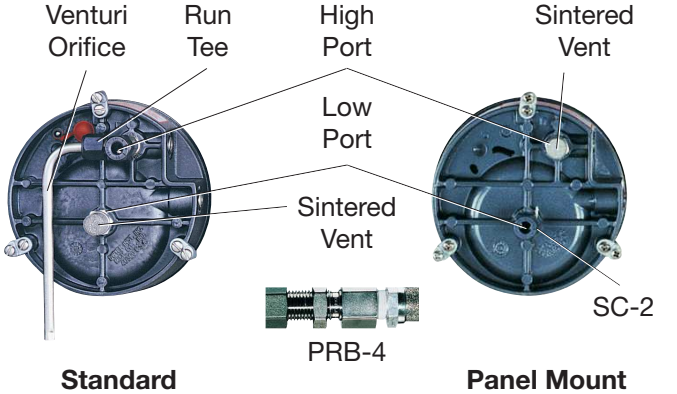

Standard Configuration (prior to conversion)

Panel Mount Configuration (after conversion)

CK Configuration Mounting Procedure

1. Transfer hole pattern of System Panel Cutout to intended surface (see page 10 for dimensions).
2. Check for obstructions hindering component installation or operation. Drill and ream the manifold holes.
3. Remove adhesive backing from System Instruction Nameplate and place on intended surface, taking care to align all holes of nameplate with corresponding manifold mounting holes on intended surface.
4. Insure manifold mounting gasket and manifold valve stem O-rings are installed onto manifold. Install manifold through cutouts in intended surface.
5. Secure manifold to intended surface utilizing hardware supplied with system. Do not overtighten.
6. Install Rapid Exchange® Injection Pressure Indicator into appropriate threaded hole in manifold. Tighten and align.
7. Install Enclosure Pressure gauge, with gasket in place, secure gauge with mounting hardware provided.

RCF Enclosure Mounting Procedure

The following instructions detail mounting an optional, Model RCF-4/8 (Remote Cube Filter), directly to the protected enclosure of a PM system installation. Alternately, the RCF-4/8 can be installed "in-line" on the Protective Gas Supply.

1. Determine the mounting location of the Remote Cube Filter.
2. Transfer hole pattern (located on page 10) of RCF-4/8 to intended enclosure surface.
3. Check for obstructions hindering bolt fastening or tubing connections, drill and ream the mounting holes before mounting the RCF-4/8.
4. Ensure the O-ring gasket supplied with the filter is placed around the outlet port of the mounting cube mounted directly to the protected enclosure surface. This O-ring will seal filter to the enclosure to prevent air leakage.
5. Secure filter to intended mounting surface with mounting hardware provided, confirm O-ring seal is properly positioned. Tighten mounting hardware.
6. Follow tubing instructions located on pages 12 & 13.

Subject to modifications without notice
Copyright Pepperl+Fuchs
Pepperl+Fuchs Group www.pepperl-fuchs.com
USA: +1 330-486-0002 pa-info@us.pepperl-fuchs.com
Germany: +49 621-776-2222 pa-info@de.pepperl-fuchs.com
Singapore: +65-6779-9091 pa-info@sg.pepperl-fuchs.com
PEPPERL+FUCHS
PROTECTING YOUR PROCESS

Required Hardware Mounting

Required Enclosure Protection Vent

All configurations must be mounted in a true vertical position.

The vent must be located to provide access for routine testing of the vent's flapper assembly. A minimum 8" clearance is required below the vent opening.

1. Determine the vent's mounting configuration, i.e., -00 vertical mount or -90 side mount. (see photos below)
2. Determine vent location and layout vent mounting hole on the protected enclosure. (as determined on page 6, "Getting Started")
3. Using a 1.6875" hole saw or 1 1/4" conduit punch for 3003 systems, drill and deburr the enclosure protection vent mounting hole.
4. Remove the hub mounting nut from the vent hub and place the hub, with O-ring intact, through the mounting hole. The O-ring must be on the outside of the protected enclosure.
5. Reinstall the hub mounting nut to the mounting hub from inside the protected enclosure and tighten.

EPV - 3 - SA - 00
Vertical Mount

EPV - 3 - SA - 90
Side Mount

Required Warning Nameplate(s)

A EWN (Enclosure Warning Nameplate) must be located in a prominent position on or near **all** enclosure accesses (doors and covers).

One (1) EWN is provided with each system, located in the manila envelope taped to the mounting flange of the system. Additional EWN's are available from Pepperl+Fuchs.

All EWNs provide labeled spaces allowing the customer to mark the protected enclosure with: 1) a T Code (temperature identification number), 2) Class, Group and Division of surrounding area, and 3) NFPA pressurization Type X, Y or Z, as may be required by plant and local codes and is required by NFPA 496.

A Model ETW (Enclosure Temperature Warning nameplate) must be located in a prominent position on or near all enclosure accesses (doors and covers) when the temperature of an internal component exceeds 80 percent of the ignition temperature of the flammable vapor, gas or dust involved.

A Model ETW warns the operator to deenergize all equipment for a specified length of time, allowing the protected equipment to cool before opening the protected enclosure. The length of time required is determined by the customer and can be factory or field engraved.

All EWNs and ETWs are furnished with an adhesive back, but should also be riveted or screwed to the protected enclosure.

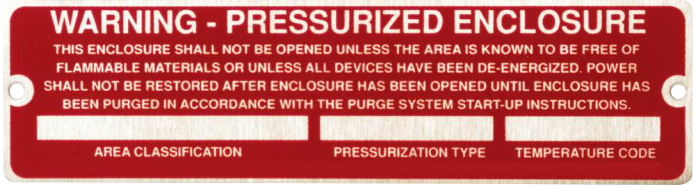

Enclosure Warning Nameplate - Class I

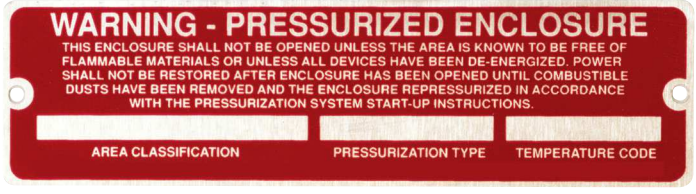

Enclosure Warning Nameplate - Class II

Enclosure Temperature Warning Nameplate

Model 3003 VM Configuration - The Vertical Mount System

LPS (Less Pressure Switch)

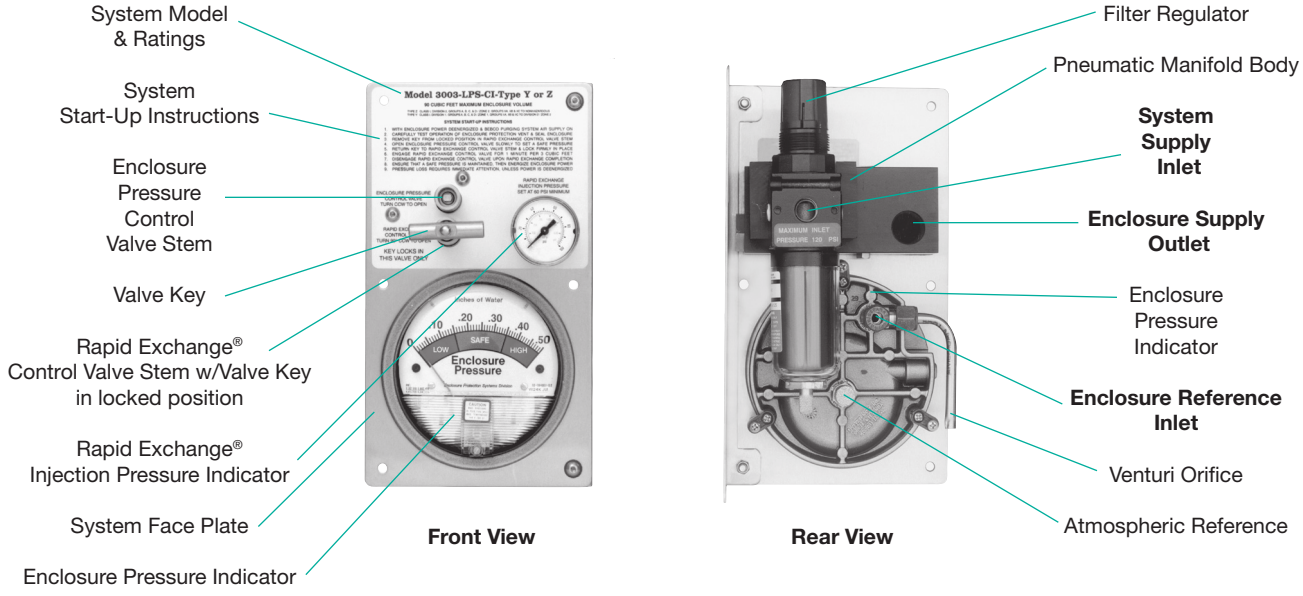

Important Notes

1) The VM configuration is supplied with a mounting flange for right-angled attachment to a vertical surface external to the protected enclosure.
2) The VM configuration can also be frame mounted external to the protected enclosure through a 5" (127 mm) W x 9" (229 mm) H cutout in a suitable mounting surface.
3) Model GCK gauge conversion kit is required to panel mount the VM configuration through a 5" (127 mm) W x 9"(229 mm) H cutout in the protected enclosure surface.
4) See page 52 for Model GCK kit description and conversion procedure.

WPS / WPSA (With Pressure Switch)

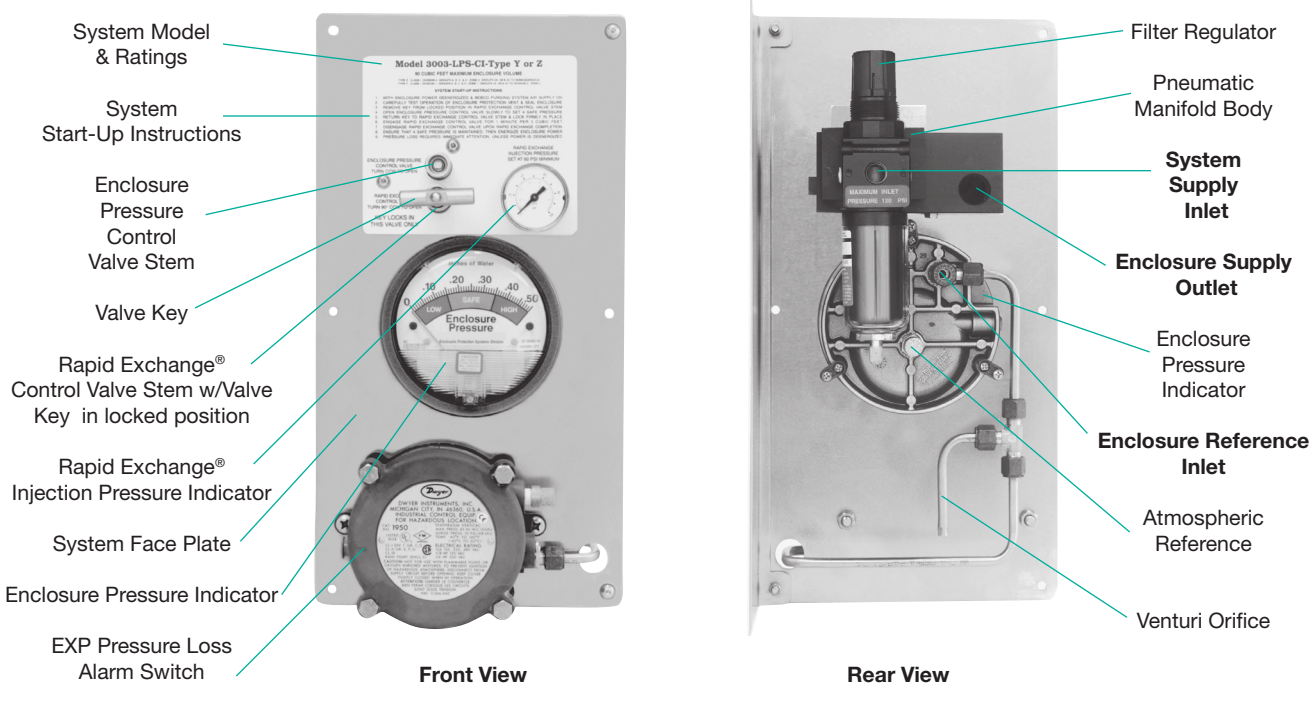

CONNECTION POINTS SHOWN ABOVE IN BOLD TEXT ON SYSTEM DIAGRAM

Subject to modifications without notice
Copyright Pepperl+Fuchs
Pepperl+Fuchs Group
www.pepperl-fuchs.com
USA: +1 330-486-0002
pa-info@us.pepperl-fuchs.com
Germany: +49 621-776-2222
pa-info@de.pepperl-fuchs.com
Singapore: +65-6779-9091
pa-info@sg.pepperl-fuchs.com
PEPPERL+FUCHS
PROTECTING YOUR PROCESS

Model 3003 HM Configuration - The Horizontal Mount System

LPS (Less Pressure Switch)

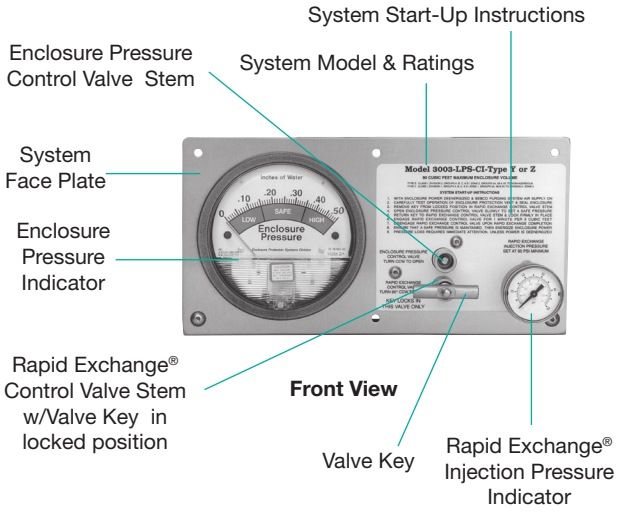

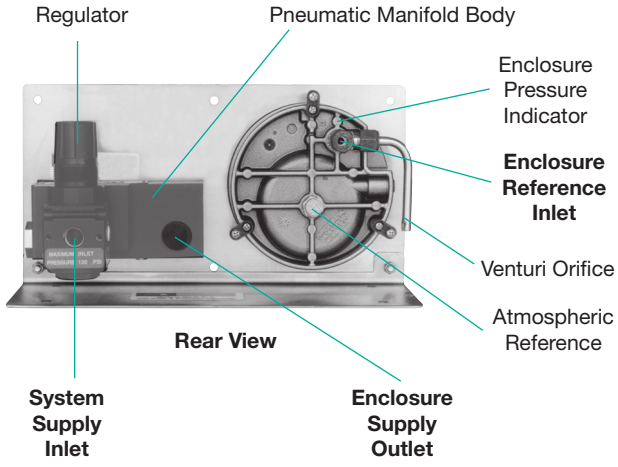

Important Notes

1) The HM configuration is supplied with a mounting flange for right-angled attachment to a horizontal surface external to the protected enclosure.
2) The HM configuration can also be frame mounted external to the protected enclosure through a 10.25" (260mm) W x 5" (127mm) H cutout in a suitable mounting surface.
3) Model GCK gauge conversion kit is required to panel mount the HM configuration through a 10.25" (260mm) W x 5" (127mm) H cutout in the protected enclosure surface.
4) See page 52 for Model GCK kit description and conversion procedure.

WPS / WPSA (With Pressure Switch)

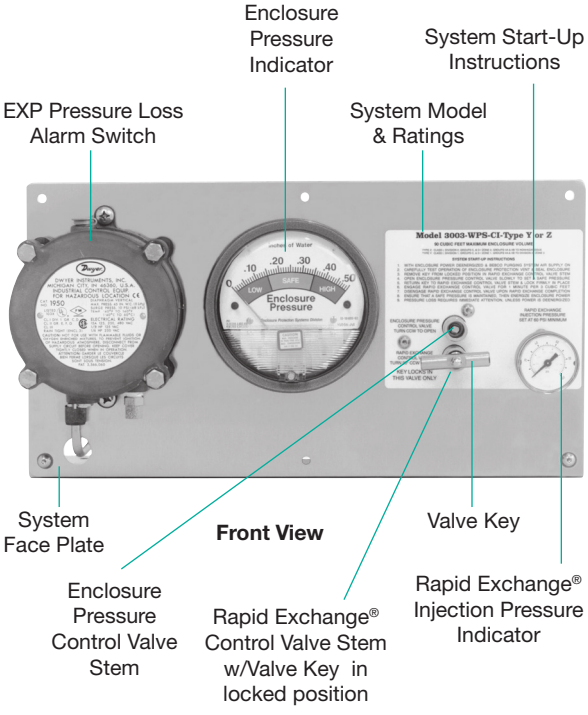

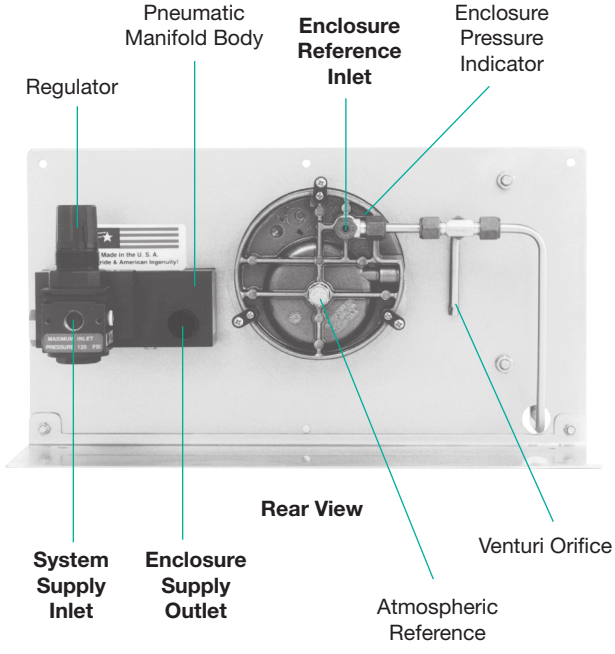

CONNECTION POINTS SHOWN ABOVE IN BOLD TEXT ON SYSTEM DIAGRAM

Model 3003 WPS VM Configuration & Flange Dimensions in Inches (mm)

LPS (Less Pressure Switch)

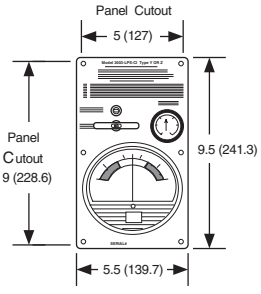

VM Configuration Front View

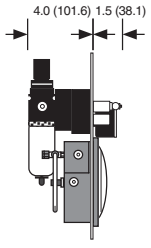

VM Configuration Side View

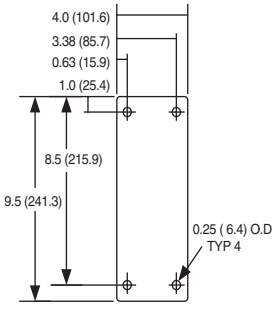

Vertical Mount Flange Front View

WPS/WPSA (With Pressure Switch)

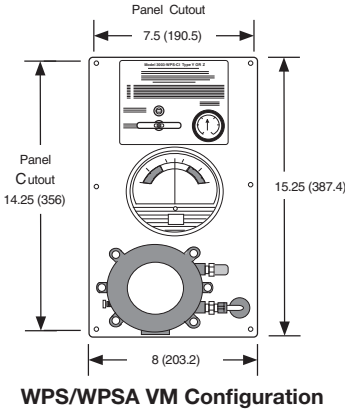

WPS/WPSA VM Configuration Front View

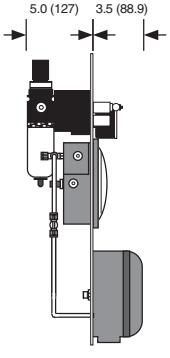

WPS/WPSA VM Configuration Side View

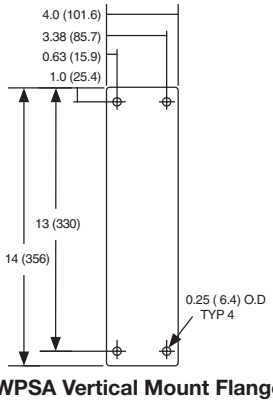

WPS/WPSA Vertical Mount Flange Front View

Model 3003 HM Configuration & Flange Dimensions in Inches (mm)

LPS (Less Pressure Switch)

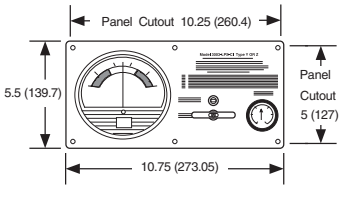

LPS HM Configuration Front View

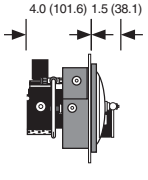

LPS HM Configuration Side View

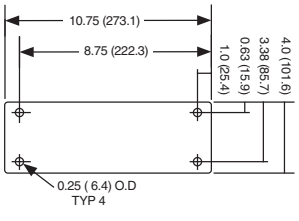

LPS Horizontal Mount Flange Front View

WPS/WPSA (With Pressure Switch)

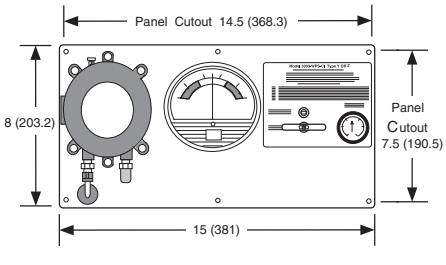

WPS/WPSA HM Configuration Front View

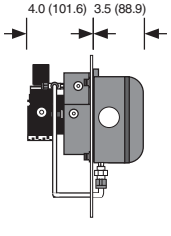

WPS/WPSA HM Configuration Side View

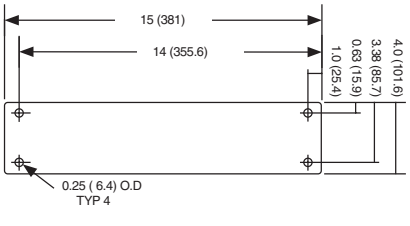

WPS/WPSA Horizontal Mount Flange Front View

Copyright Pepperl+Fuchs

System Installation Details

Typical System Installation Details

- External to the Protected Enclosure -

Flange Mount HM Configuration

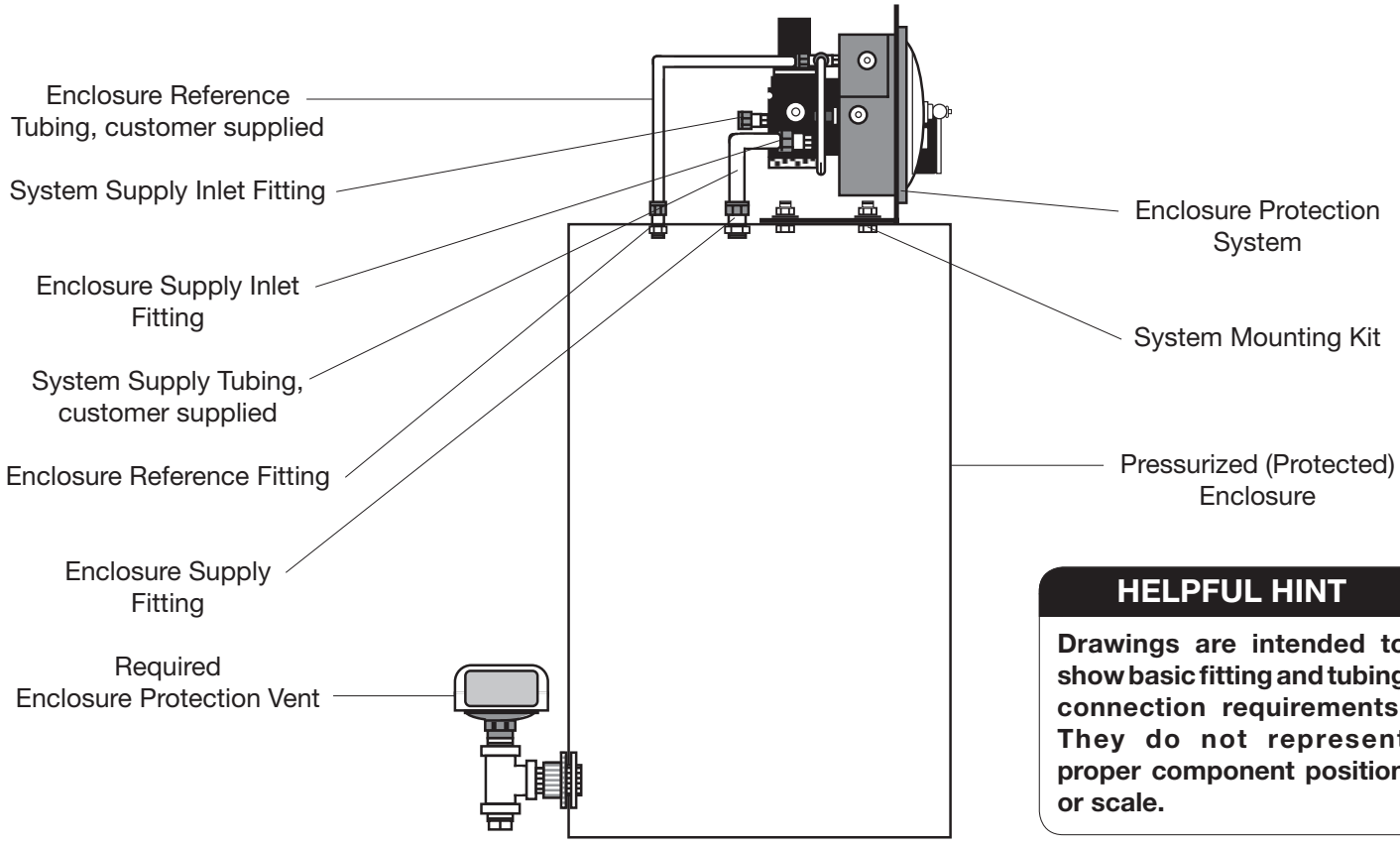

HELPFUL HINT

Drawings are intended to show basic fitting and tubing connection requirements. They do not represent proper component position or scale.

Pneumatic Tubing Requirements

Protective Gas Supply Requirements

The protective gas supply to the protection system must be a clean, instrument quality compressed air or nitrogen and must contain no more than trace amounts of flammable gas, vapor or dust.

The protective gas supply compressor intake must originate in a nonhazardous location. Suction duct passing through a hazardous location and the protection system tubing and piping must be fabricated from noncombustible materials suitable for prevailing hazards and environmental conditions.

The protective gas supply must originate from a dedicated instrument quality compressed air header (1/2" pipe or larger), no farther than twenty (20) feet from the protection system. Local compressors and gas cylinders should not be used before consulting with factory.

The protective gas supply to the protection system must be regulated from 120 psi maximum to 80 psi minimum.

SC-6-4* & SC-6-8*

NC-6-4 & NC-6-8

SYSTEM SUPPLY INLET & ENCLOSURE SUPPLY OUTLET FITTINGS

EFC-4* & EFC-6*

EBC-4 & EBC-6

ENCLOSURE SUPPLY, ENCLOSURE REFERENCE & SYSTEM SUPPLY BULKHEAD FITTINGS

EPC-13

MULTIPLE ENCLOSURE CONNECTION FITTING

* **Denotes Fittings Supplied with Hoffman Kit.**

Pneumatic Connection Requirements

ALL FITTINGS MAY BE CUSTOMER OR FACTORY FURNISHED

1. For system supply, one (1) Model SC-6-4* 3/8" tube x 1/4" NPT Male Straight Connector or one (1) Model NC-6-4 3/8" tube x 1/4" NPT Male Elbow Connector or equivalent fitting per system.

   Note: Systems supplied with optional RCF-4 or ILF-4 filter accessories require two (2) additional SC-4-6 or NC-6-4 connectors.

   One (1) similar fitting which will connect the protective gas supply tubing to the protective gas supply header connection point and one (1) lot of 3/8" O.D., .035" wall thickness, welded or seamless stainless steel tubing.

   NOTE: 1/4" 150# rated pipe, couplings & unions, fully reamed, can be utilized in place of the fittings and tubing listed above.

2. For enclosure supply from the system, one (1) SC-6-8* 3/8" tube x 1/2" NPT Male Straight Connector or one (1) Model NC-6-8 3/8" tube x 1/2" NPT Male Elbow Connector or equivalent fitting per system.

3. For enclosure supply into the protected enclosure, one (1) Model EFC-6* 3/8" Flush Connector, or one (1) EBC-6 3/8" Feed-Through Connector or equivalent fitting per system.

4. For enclosure reference, one (1) Model EFC-4* 1/4" Flush Connector, or one (1) EBC-4 1/4" Feed-Through Connector or equivalent fitting per system.

5. One (1) lot of 1/4" & 3/8" O.D., .035" wall thickness, welded or seamless stainless steel tubing.

6. For multiple enclosure connections, two (2) Model EPC-13 1-1/4" Pipe Mounting Hubs or equivalent and 1-1/4" 150# rated pipe couplings & unions per interconnection.

   One (1) lot 150# rating 1-1/4" galvanized or aluminum pipe and fittings, fully reamed and unrestricted.

PM Pneumatic Connection Requirements

In addition to item numbers 1, 5 and 6 above, the following fittings are required for all PM systems.

1. For system supply on PM installations, one (1) additional Model EBC-6 or equivalent 3/8" Through Bulkhead Fitting per system is required.

2. For atmospheric reference, one (1) Model PRB-4 or equivalent 1/4" female bulkhead fitting and stainless steel sintered element is required.

PRB-4

SYSTEM ATMOSPHERIC REFERENCE FITTING

Subject to modifications without notice
Copyright Pepperl+Fuchs
Pepperl+Fuchs Group
www.pepperl-fuchs.com
USA: +1 330-486-0002
pa-info@us.pepperl-fuchs.com
Germany: +49 621-776-2222
pa-info@de.pepperl-fuchs.com
Singapore: +65-6779-9091
pa-info@sg.pepperl-fuchs.com
PEPPERL+FUCHS
PROTECTING YOUR PROCESS

Tubing Installation

HELPFUL HINTS

All work must be performed by technicians qualified in pneumatic tubing and electrical conduit installation.

Pepperl+Fuchs recommends the use of .035" wall thickness, welded or seamless stainless steel tubing. If flexible tubing is used, it must be installed in a manner which will protect it from damage and corrosion.

Surface, Pipe or Frame Mounted Installations

System Supply Connections

1. Select or install a protective gas supply header tap, fitted with the proper tube size fitting and located within twenty (20) feet of the enclosure protection system.
2. If a service valve is placed between the protective gas supply header and the enclosure protection system, it must be installed in close proximity of the protected enclosure.
3. Select the appropriate fittings required to connect the protective gas supply to the System Supply Inlet as determined on page 12,"Pneumatic Connection Requirements." Install fittings.
4. Determine appropriate tubing route from the protective gas supply header to the System Supply Inlet.
5. Bend tubing using industrial grade benders, check tubing fit to ensure proper seating between the tubing and fittings. Fully ream all tubing ends.
6. Install tubing and tighten all fittings to fitting manufacturer's specifications. Secure tubing to appropriate structural supports as required.

Enclosure Supply & Reference Connections

1. Choose location for the enclosure supply connection(s) based on the requirements on page 6, "Getting Started".
2. Place the enclosure reference connection fitting directly behind the enclosure protection system and at least one foot away from the enclosure supply and enclosure protection vent connections, whenever possible. For systems protecting multiple enclosures in series, the enclosure reference connection fitting must be placed on the last enclosure in the series. (see page 6, "Getting Started")
3. Drill and deburr enclosure supply and reference fitting holes on the protected enclosure. Mount the fittings.
4. Determine appropriate route for the enclosure supply and reference tubing.
5. Bend tubing using industrial grade benders, check tubing fit to ensure proper seating between the tubing and fittings. Fully ream all tubing ends.
6. Install tubing and tighten all fittings to fitting manufacturer's specifications. Secure tubing to appropriate structural supports as required.

Panel Mounted Installations

IMPORTANT NOTE

The System's enclosure pressure gauge must be modified for panel mount installation prior to performing the following instructions. Refer to page 9 "Panel Mount Conversion Process" for additional information.

Enclosure Bulkhead Fittings

1. Select the fittings required to install the System Supply, System Supply Bulkhead Fitting and Atmospheric Reference Bulkhead Fitting, (see page 12, "Pneumatic Tubing Requirements").
2. Choose location for the system supply bulkhead fitting. This fitting allows the protective gas supply to pass through the wall of a protected enclosure to the protection system's regulator supply inlet connection.
3. Choose location for the atmospheric reference bulkhead fitting. This fitting allows the enclosure pressure gauge to reference atmospheric pressure.
4. Drill and deburr system supply and reference bulkhead fitting holes in the protected enclosure. Install fittings.

System Supply & Reference Connections

1. Select or install a protective gas supply header tap, fitted with the proper tube size fitting and located within twenty (20) feet of the enclosure protection system.
2. If a service valve is placed between the protective gas supply header and the protection system, it must be in close proximity of the protected enclosure.
3. Determine appropriate tubing route from the protective gas supply header to the system supply bulkhead fitting.
4. Determine appropriate tubing route from the system supply bulkhead fitting to the System Supply Inlet.
5. Determine appropriate tubing route from the atmospheric reference bulkhead fitting to the enclosure pressure gauge's reference inlet side connection.
6. Bend tubing using industrial grade benders, check tubing fit to ensure proper seating between the tubing and fittings. Fully ream all tubing ends.
7. Install tubing and tighten all fittings to fitting manufacturer's specifications. Secure tubing as required.

Tubing Connection Diagrams

Surface, Pipe & Frame Mounted Connection Points & Pneumatic Diagram

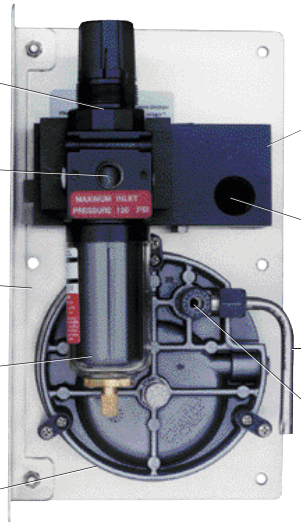

Model A-3003YZVM Shown

HELPFUL HINT

This information is intended for systems mounted external or adjacent to the protected enclosure. HM & CK configuration connection points and pneumatic diagrams are identical to the VM configuration shown to the left.

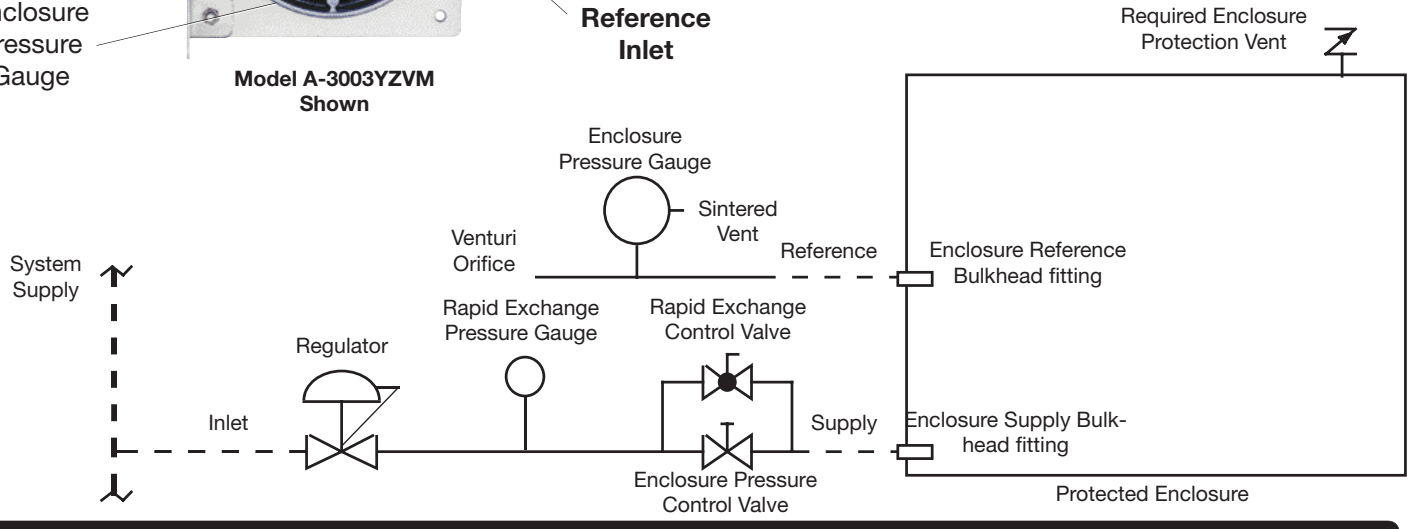

Panel Mount Connection Points & Pneumatic Diagram

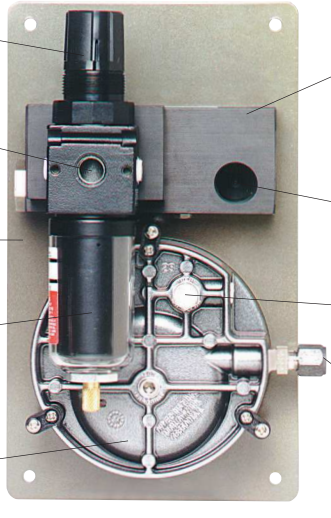

Model A-3003YZVM Shown w/ GCK installed

HELPFUL HINT

This information is intended for systems mounted internal to or through the surface of the protected enclosure. HM & CK configuration connection points and pneumatic diagrams are identical to the VM configuration shown to the left.

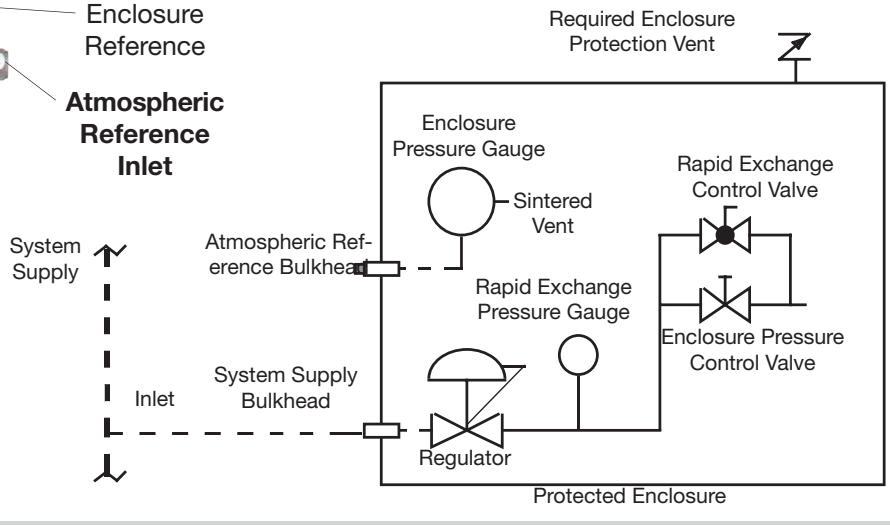

HELPFUL HINT

Pneumatic Connections are bolded.

Subject to modifications without notice
Copyright Pepperl+Fuchs
Pepperl+Fuchs Group
www.pepperl-fuchs.com
USA: +1 330-486-0002
pa-info@us.pepperl-fuchs.com
Germany: +49 621-776-2222
pa-info@de.pepperl-fuchs.com
Singapore: +65-6779-9091
pa-info@sg.pepperl-fuchs.com
PEPPERL+FUCHS
PROTECTING YOUR PROCESS

Electrical Supply Requirements

General Wiring Requirements

WARNING

THIS DEVICE CONTAINS ELECTRICAL PARTS WHICH CAN CAUSE SHOCK OR INJURY

All electrical connections, conduit and fittings on the protected enclosure must be suitable for the hazardous location in which they are installed. In addition, all conduit and wire must be installed in accordance with NEC as required and all relevant plant and local codes.

Note: Do not use seals on conduit used as a protected "wireway" to supply protective gas to adjacent protected enclosures. The same conduit can be utilized for both electrical and pneumatic service to an adjacent protected enclosure(s), provided the conduit is oversized to allow a minimum free clearance equal to or larger than the pipe size required between multiple enclosures as stated on page 7, "Getting Started."

Enclosure Power Requirements

The protected enclosure(s) electrical power source must originate from a circuit breaker or fused disconnect suitable for the hazardous location in which it is installed. The switch must be located within fifty (50) feet of the protected enclosure(s) and the protection system and be properly marked.

Alarm Signal Requirements

The protected enclosure(s) alarm signal may originate from the protected enclosure if the alarm signal is disconnected by the protected enclosure's circuit breaker or fused disconnect as stated in Enclosure Power Requirements above.

The protected enclosure(s) alarm signal power may also originate from outside of the protected enclosure. In this application, the protected enclosure may be used as a "wireway" to pass alarm signal wiring from the power source to the alarm device, if the wiring is isolated and properly labeled. In addition, appropriate conduit seals must be provided outside of the protected enclosure separately.

IMPORTANT NOTE

NFPA 496 requires the use of an alarm or an indicator to detect the loss of safe enclosure pressure. In addition, the NFPA 496 requires that if an indicator alone is utilized, a protective gas supply alarm must also be installed between the last valve in the protective gas supply and the protected enclosure. Therefore, the protective gas supply to all LPS Style systems must be equipped with the above mentioned protective gas supply alarm. Exception: Systems utilizing a Model EPSK or GPSK enclosure pressure loss alarm switch accessory will satisfy the above mentioned NFPA requirement.

Typical Enclosure Wiring Methods

In a general sense, protected enclosures should be wired similar to explosion proof enclosures, in accordance with Article 500 of the National Electric Code - **NFPA 70.**

Single conductor wiring should be placed in rigid metal conduit, seal-flex conduit or other mediums approved for use in the hazardous location surrounding the protected enclosure. Additionally, **NFPA 496** requires the use of approved seals on all pressurized enclosure conduit wiring entries, in accordance with **NFPA 70**. Furthermore, the use of an approved seal is simply the most practical way to prevent excessive leakage through conduit connections.

However, while explosion proof enclosures require conduit seals on all cable entries, in accordance with **NFPA 70**. Other methods of sealed cable entries that are suitable for hazardous locations can be used, such as compression glands.

In conclusion, there are two primary goals. First, the installer should ensure that all associated wiring and cable is protected by pressurization or other means, such as explosion proof conduit or intrinsic safety barriers. Secondly, the installer should ensure that all associated conduit and wireways are sealed to conserve protective gas, unless they are used to supply protective gas to other enclosures or devices.

Typical Enclosure Wiring Connections

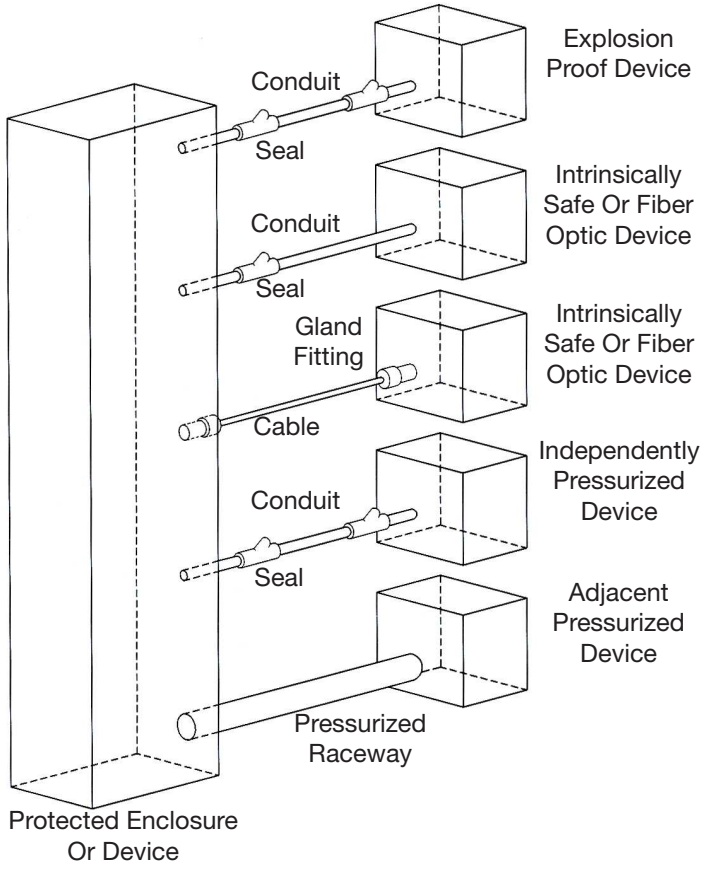

Set-up Procedure

HELPFUL HINTS

"Safe" pressure, for purposes of this manual, is defined as a minimum .25 inch of water column.

Regulator may be in the locked position upon arrival. To adjust regulator, pull handle to outward position.

Carefully insert T-bar valve key to align valve stem tip of both valves. Practice locking and unlocking key in the RECV valve stem. Practice and familiarization of this process should ease operation of the system.

To test the vent's operation, gently prod the vent flapper open with a soft pointed object, (example: eraser end of a pencil) ensuring that the vent valve works freely. On vertically configured vents, this can be accomplished from within the protected enclosure. Side mounted -90 configured vents can be tested by removing the conduit plug at the bottom of the mounting tee. Multiple operations require only one test per day if enclosure is not opened or left unattended.

IMPORTANT NOTES

The Rapid Exchange Control Valve and the Enclosure Pressure Control Valve are both operated by utilizing the removable T-bar Valve Key supplied with the system. The system is shipped with the T-bar Valve Key locked in the Rapid Exchange Control Valve stem. To remove the T-bar Valve Key, wrap your index and middle finger around the T-Bar and place your thumb firmly against the system face plate. Pull the T-bar Valve Key straight out firmly. This will unlock and free the T-bar Valve Key for use in the Enclosure Pressure Control Valve stem. When Set-Up or Operating procedures are complete, replace the T-bar Valve Key in the Rapid Exchange® Control Valve stem and push in firmly to lock in position. THE T-BAR VALVE KEY LOCKS IN THE RAPID EXCHANGE CONTROL VALVE STEM ONLY.

Operators must secure wrist or stop watch to manually time Exchange Cycle for all applications.

Rapid Exchange Purging Systems are designed to provide a pre-calibrated and certified volume exchange rate. With the Rapid Exchange pressure gauge set at 60 psi minimum, the system will accomplish the required volume exchanges as defined on page 4 "System Specifications".

For volume exchange rates based on a four (4) enclosure volume exchange, multiply the required exchange time by 2.5 for applications requiring a ten (10) volume exchange for motors.

For volume exchange rates based on a five (5) enclosure volume exchange, multiply the required exchange time by 2 for applications requiring a ten (10) volume exchange for motors.

Regardless of enclosure volume or system flow rate, Pepperl+Fuchs requires that operators withhold power to the enclosure while inducing the Class I enclosure volume exchange, for at least five (5) minutes. Normal exchange times should be doubled if large obstructions block protective gas flow.

Class I Purging Set-up

READ IMPORTANT NOTES BEFORE PROCEEDING WITH SET-UP

1. Utilizing the T-bar Valve Key supplied with system (see important notes), close Rapid Exchange Control and Enclosure Pressure Valves fully by turning clockwise (CW).
2. Engage the protective gas supply to the System Supply Inlet and set the Rapid Exchange Pressure Gauge to 60 psi.
3. Temporarily connect a 0-10 inch water column pressure gauge or manometer to the protected enclosure.
4. Check operation of Enclosure Protection Vent as detailed above. (see "Helpful Hint")
5. Seal enclosure(s) and adjust Enclosure Pressure Control Valve, utilizing the T-bar Valve Key, by opening slowly counterclockwise (CCW) to set a "Safe" pressure on the Enclosure Pressure Gauge.

   NOTE: If pressure setting is difficult to stabilize or set, (see page 18, "Troubleshooting Procedures").
6. Carefully remove T-bar Valve Key from Enclosure Pressure Control Valve stem. Ensure Enclosure Pressure Gauge "Safe" pressure setting is stable.
7. Utilizing the T-bar Valve Key supplied with system (see important notes above), lock T-bar Valve Key into Rapid Exchange Control Valve stem. Open valve **fully** by turning 90° CCW and quickly ensure the Enclosure Protection Vent opens. Note: The Enclosure Pressure Gauge should move quickly off scale to the right, this is normal for all Rapid Exchange purging systems.
8. Readjust the regulator to 60 psi minimum, while inducing Rapid Exchange, until the test gauge reads approximately 3 to 5 inches of pressure and does not fluctuate. (insufficient enclosure pressure will cause the Enclosure Protection Vent to "shuttle") DO NOT exceed 10 inches of pressure within the protected enclosure.
9. Close Rapid Exchange Control Valve fully and ensure T-bar Valve Key is firmly locked in Rapid Exchange Control Valve stem.
10. Cease testing and remove test equipment.

Subject to modifications without notice
Copyright Pepperl+Fuchs
Pepperl+Fuchs Group
www.pepperl-fuchs.com
USA: +1 330-486-0002
pa-info@us.pepperl-fuchs.com
Germany: +49 621-776-2222
pa-info@de.pepperl-fuchs.com
Singapore: +65-6779-9091
pa-info@sg.pepperl-fuchs.com
PEPPERL+FUCHS
PROTECTING YOUR PROCESS

Operating Sequence

WARNING

Do not exceed "Safe" pressure with the Enclosure Pressure Control Valve.

Operators must follow step-by-step sequence of the Start-Up Instructions Nameplate on the Protection System.

Class I Purging Operation

With the protective gas supply connected, enclosure power deenergized and alarm system energized (if utilized).

1. Carefully read Start-Up Instructions on system.
2. Check operation of the Enclosure Protection Vent, opening it manually several times, (see page 16, “Helpful Hint”).
3. Seal protected enclosure(s).
4. Unlock T-bar Valve Key from the RECV stem and place in the EPCV stem. (see important notes, page 16), open Enclosure Pressure Control Valve, by turning CCW, to set Enclosure Pressure Gauge at “Safe” pressure, the Pressure Loss Alarm Switch (if utilized) should then activate to silence the alarm system.
5. Ensure the Protection System Enclosure Pressure Gauge maintains a “Safe” pressure for one (1) minute.
6. Carefully remove T-bar Valve Key from Enclosure Pressure Control Valve stem. Ensure Enclosure Pressure Gauge "Safe" pressure setting is stable.
7. Utilizing the T-bar Valve Key supplied with system (see important notes, page 16), open Rapid Exchange® Control Valve **fully** by turning 90° CCW and quickly ensure the Enclosure Protection Vent opens. Note: The Enclosure Pressure Gauge should move quickly off scale to the right, this is normal for all Rapid Exchange® purging systems.
8. Standby for the exchange time as specified on the Start-Up Instructions (five minutes minimum), then close the Rapid Exchange® Control Valve fully and ensure T-bar Valve Key is firmly locked in Rapid Exchange® Control Valve stem.
9. Wait for the Enclosure Pressure Gauge to return to a "Safe" pressure and energize the protected enclosure(s) power via the local disconnect switch.
10. Ensure the Enclosure Pressure Indicator maintains a “Safe” pressure before leaving system unattended.

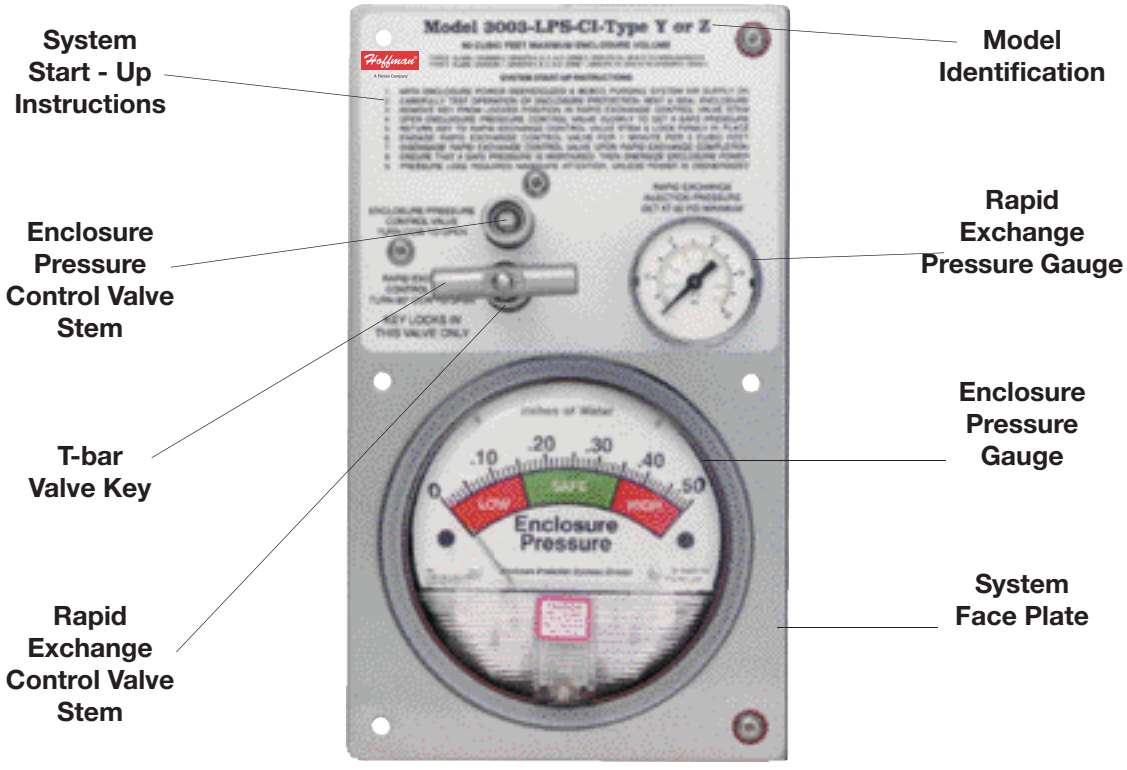

Model A-3003YZVM-LPS
Front View

Troubleshooting Procedures

Problem or Fault	Possible Causes	Corrective Action
Enclosure pressure control valve will not hold a "Safe" .25 inch pressure.	Leakage around gasketing, covers, seams, piping and tubing connections, conduit connections and electrical conduit seals of the enclosure.	Tighten enclosure latches: Where tightening is not feasible, and gasketing materials are not practical, holes or gaps can be closed with silicone sealant applied from inside the protected enclosure.
Enclosure pressure gauge reading is difficult to stabilize.	Insufficient enclosure leakage or opening of the venturi orifice is crimped to small.	Remove the orifice, cut off the crimped end and ream the tube, then recrimp and reinstall the tube to note effect. As tube is shortened, reamed, and recrimped, sensitivity decreases, allowing easier adjustment of setpoint on the enclosure pressure gauge.
Enclosure pressure loss alarm switch (if utilized) does not appear to be operating.	Pressure switch is out of calibration.	Calibrate by slowly adjusting counter-clockwise to decrease the setpoint, and clockwise to raise the setpoint. (Do not attempt to calibrate the switch until all efforts to make the switch respond properly have failed)
Problems persists, or if the system does not appear to be operating properly.	Persisting problems.	Contact nVent HOFFMAN at (763) 422-2211 for more information.

This section covers the most common problems documented with these systems. Any problems not covered in this section should be addressed directly to our factory. Please address all service needs to nVent HOFFMAN (763) 422-2211.

Subject to modifications without notice
Copyright Pepperl+Fuchs
Pepperl+Fuchs Group
www.pepperl-fuchs.com
USA: +1 330-486-0002
pa-info@us.pepperl-fuchs.com
Germany: +49 621-776-2222
pa-info@de.pepperl-fuchs.com
Singapore: +65-6779-9091
pa-info@sg.pepperl-fuchs.com
PEPPERL+FUCHS
PROTECTING YOUR PROCESS

Warranty Terms and Conditions

PEPPERL+FUCHS STANDARD 24-MONTH WARRANTY

1. Limited Warranty. Pepperl + Fuchs, Inc. ("P+F") warrants Purge Units and components for Purge Units manufactured by P+F ("Product" or "Products") to be free from defects in material and workmanship under Normal Use for a period of twenty-four (24) months from the date of shipment of such Products from P+F's warehouse or place of manufacture (or from P+F's authorized representative or distributor). Only the original purchaser of such Products (the "Customer") shall be entitled to the benefit of the foregoing Limited Warranty. No representative, agent or salesman of P+F is authorized to give or provide any warranty or make any representation contrary to or in addition to the foregoing Limited Warranty.

2. Inspection and Claims. Customer must inspect and test all Products upon receipt. All claims under the Limited Warranty provided herein must be made within thirty (30) days of the discovery of the defect. Customer must obtain shipping instructions from P+F prior to returning any Product, which Product must be returned at Customer's expense in accordance with P+F's instructions.

3. Limitations and Exclusions. "Normal Use" shall mean use and operation within rated capacities, at the correct voltage, and with any required maintenance as provided in the applicable P+F Operating Manuals. The Limited Warranty provided herein does not apply to (i) any Products which have been altered or modified in any way or disassembled by the Customer or anyone else, (ii) any Products which have been subject to misuse, negligence or accident, or improperly installed, changed, substituted or replaced, (iii) any part or component not manufactured by P+F, or (iv) any part or component that is subject to wear or consumption. For parts or components not manufactured by P+F, the Customer or any other user or owner shall have only the warranty provided by the manufacturer of such part or component. The Limited Warranty set forth herein is also subject to the following:

   (1) The Limited Warranty is limited to electronic and mechanical performance only, as expressly detailed in the product specifications, and does not apply to cosmetic appearance;

   (2) The Limited Warranty shall not apply to any cables attached to, or integrated with, any Products.

   (3) The Limited Warranty shall not apply to any Products which are stored, or utilized, in harsh environmental or electrical conditions outside P+F's written specifications.

   THE LIMITED WARRANTY SET FORTH HEREIN IS THE ONLY WARRANTY MADE BY P+F WITH RESPECT TO THE PRODUCTS. IT IS EXPRESSLY AGREED AND UNDERSTOOD THAT P+F MAKES NO WARRANTY OF MERCHANTABILITY OR FITNESS FOR A PARTICULAR PURPOSE. EXCEPT FOR THE LIMITED WARRANTY SET FORTH HEREIN, THERE IS NO OTHER WARRANTY, EXPRESS, IMPLIED OR STATUTORY; AND THERE IS NO AFFIRMATION OF FACT OR PROMISE BY P+F WITH REFERENCE TO THE PRODUCTS. IN NO EVENT SHALL P+F BE LIABLE FOR ACTUAL OR ANTICIPATED LOST PROFITS OR FOR INCIDENTAL OR CONSEQUENTIAL OR PUNITIVE DAMAGES OR FOR DAMAGES RESULTING FROM BUSINESS INTERRUPTION, OR INJURY OR DEATH OF PERSONS, OR INJURY TO PROPERTY. P+F'S LIABILITY ON ANY CLAIM OF ANY KIND ARISING OUT OF, CONNECTED WITH OR RESULTING FROM THE DESIGN, MANUFACTURE, SALE, REPAIR OR OPERATION OF A PRODUCT, SHALL NOT EXCEED THE PRICE ALLOCABLE TO THAT PRODUCT OR THE PART THEREOF WHICH GIVES RISE TO THE CLAIM. THE REMEDY SET FORTH IN THIS LIMITED WARRANTY CONSTITUTES THE SOLE AND EXCLUSIVE REMEDY OF THE CUSTOMER. P+F SHALL NOT BE LIABLE FOR PENALTIES OF ANY DESCRIPTION.

4. Limitation of Remedies. In the event of P+F's liability, whether on this Limited Warranty or based on contract, tort (including, but not limited to, negligence and strict liability) or otherwise, Customer's sole and exclusive remedy will be limited to, at P+F's option, the repair or replacement (f/o/b P+F's place of manufacture) by P+F of any non-conforming items for which claim is made by Customer in accordance with paragraph 2, or the repayment of the portion of the purchase price paid by Customer attributable to the non-conforming item.

5. Responsibility of Customer: Safety and Protection Precautions. P+F takes great care to design and build reliable and dependable Products; however, some Products can fail eventually. Customer must take precautions to design its equipment to prevent property damage and personal injury in the unlikely event of a failure. AS A MATTER OF POLICY, P+F DOES NOT RECOMMEND THE INSTALLATION OF PRODUCTS AS THE SOLE DEVICE FOR THE PROTECTION OF PERSONNEL OR PROPERTY AND, THEREFORE, THE CUSTOMER SHOULD BUILD IN REDUNDANCY OR DUAL CONTROL USING APPROVED SAFETY DEVICES FOR THESE APPLICATIONS.

6. Conflicts. In the event there is any conflict between the provisions of this Limited Warranty and any provisions contained in any orders, offers, acceptances or other writings or statements provided or made by Customer to P+F, the provisions of this Limited Warranty shall prevail, and the contract between P+F and the Customer shall be deemed formed only upon the provisions set forth in this Limited Warranty, and any additional or conflicting provision inserted by Customer shall be of no force or effect.

System Maintenance

Regular Maintenance

Drain the Protection System Filter (if utilized) frequently and clean system with non-solvent cleaning agents only.

Long Term Maintenance

Calibrate the enclosure pressure indicator to 0 inches by venting the purge pressure reference port and the protected enclosure to atmosphere and adjusting the calibration screw in the lower center portion of the indicator's face.

Fully open the enclosure pressure control valve, to blow out any deposits around the tip of the valve and to ensure that the enclosure protection vent is operating properly, then carefully readjust system according to the set-up procedure and operating sequence on pages 16 and 17.

Carefully disassemble the enclosure protection vent by loosening the two bottom hex nuts that hold the unit together.
(DO NOT REMOVE CAP NUTS ON TOP OF VENT BODY)
Carefully clean the flapper valve and vent body seats with warm soap and water, being careful not to extend the vent valve beyond its normal opening point, and being careful not to exert any stress on the valve hinge.

Examine the entire Protection System and the protected enclosure(s), and replace any defective parts during routine shutdown of the protected enclosure(s). Parts are available from Pepperl+Fuchs on immediate notice as required.

MAINTENANCE SCHEDULE

Date	Work Performed	Performed by

Subject to modifications without notice
Copyright Pepperl+Fuchs
Pepperl+Fuchs Group
www.pepperl-fuchs.com
USA: +1 330-486-0002
pa-info@us.pepperl-fuchs.com
Germany: +49 621-776-2222
pa-info@de.pepperl-fuchs.com
Singapore: +65-6779-9091
pa-info@sg.pepperl-fuchs.com
PEPPERL+FUCHS
PROTECTING YOUR PROCESS

MAINTENANCE SCHEDULE

Date	Work Performed	Performed by

SYSTEMS IDENTIFICATION & APPLICATION INFORMATION

Date of Installation _____

Unit Serial # _____

Item _____

Customer P.O.# _____

Customer Project# _____

Service _____

Type _____

Features _____

Application _____

NOTES: _____

Subject to modifications without notice
Copyright Pepperl+Fuchs
Pepperl+Fuchs Group
www.pepperl-fuchs.com
USA: +1 330-486-0002
pa-info@us.pepperl-fuchs.com
Germany: +49 621-776-2222
pa-info@de.pepperl-fuchs.com
Singapore: +65-6779-9091
pa-info@sg.pepperl-fuchs.com
PEPPERL+FUCHS
PROTECTING YOUR PROCESS