ProLine FloTek TD

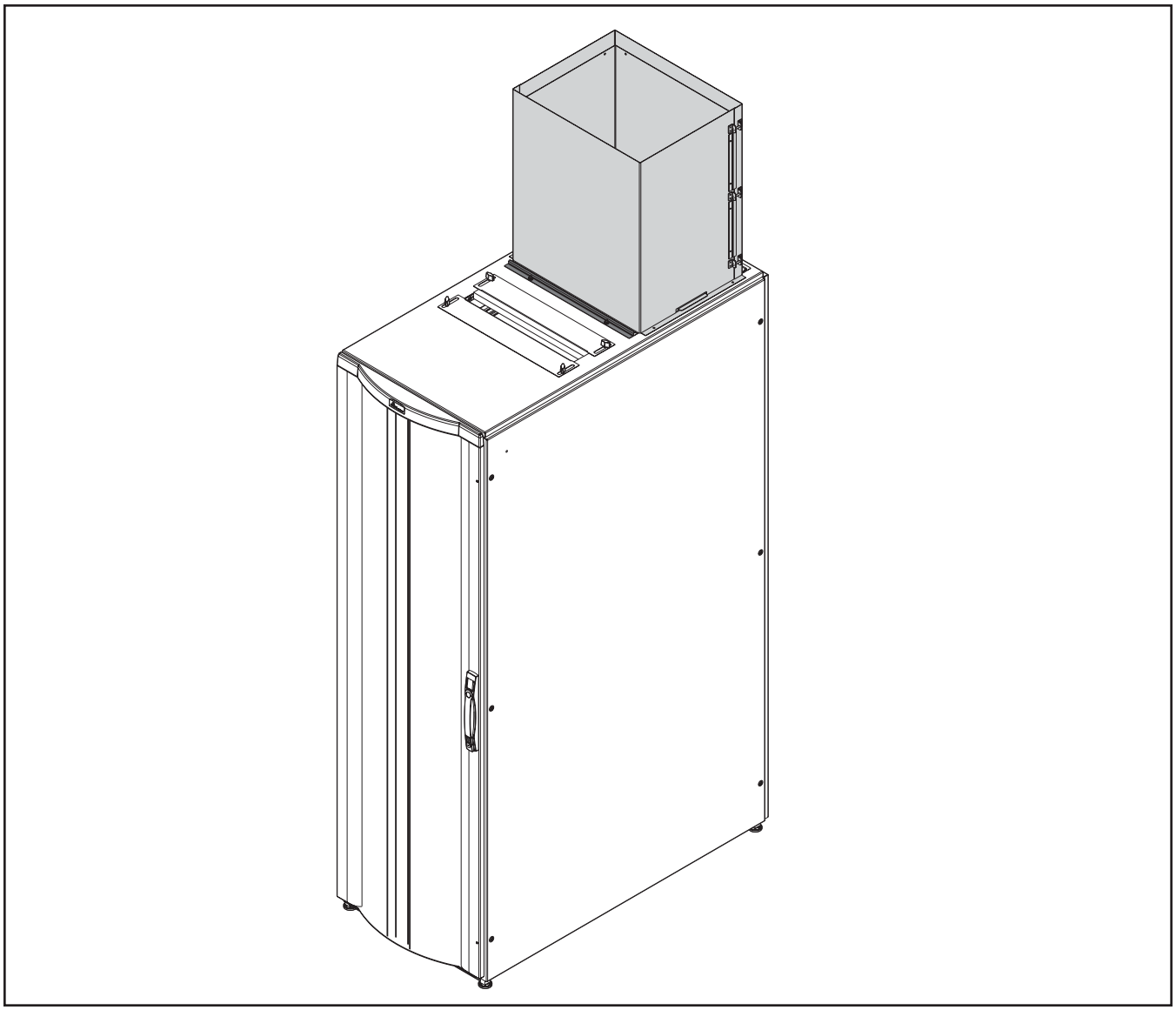

© 2020 Hoffman Enclosures Inc.

1 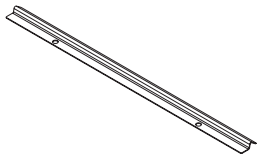 2X	2 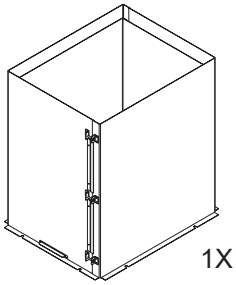 1X
3 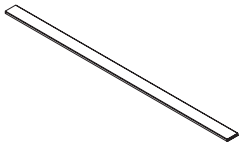 2X	4 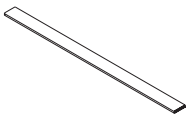 2X
5 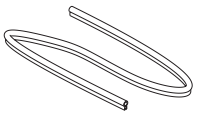 1X	6 M6 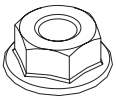 4.5 Nm (40 in-lbs) 4X

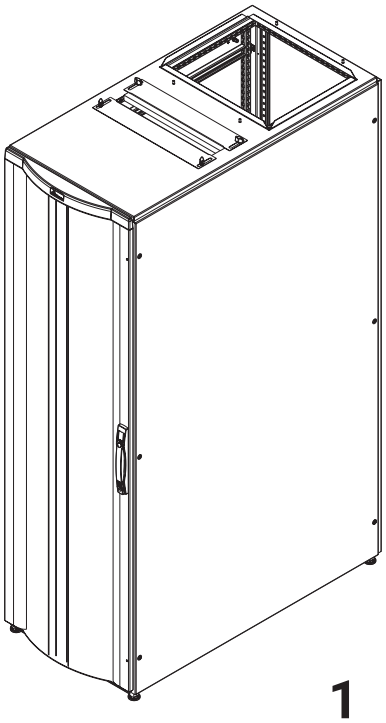

1

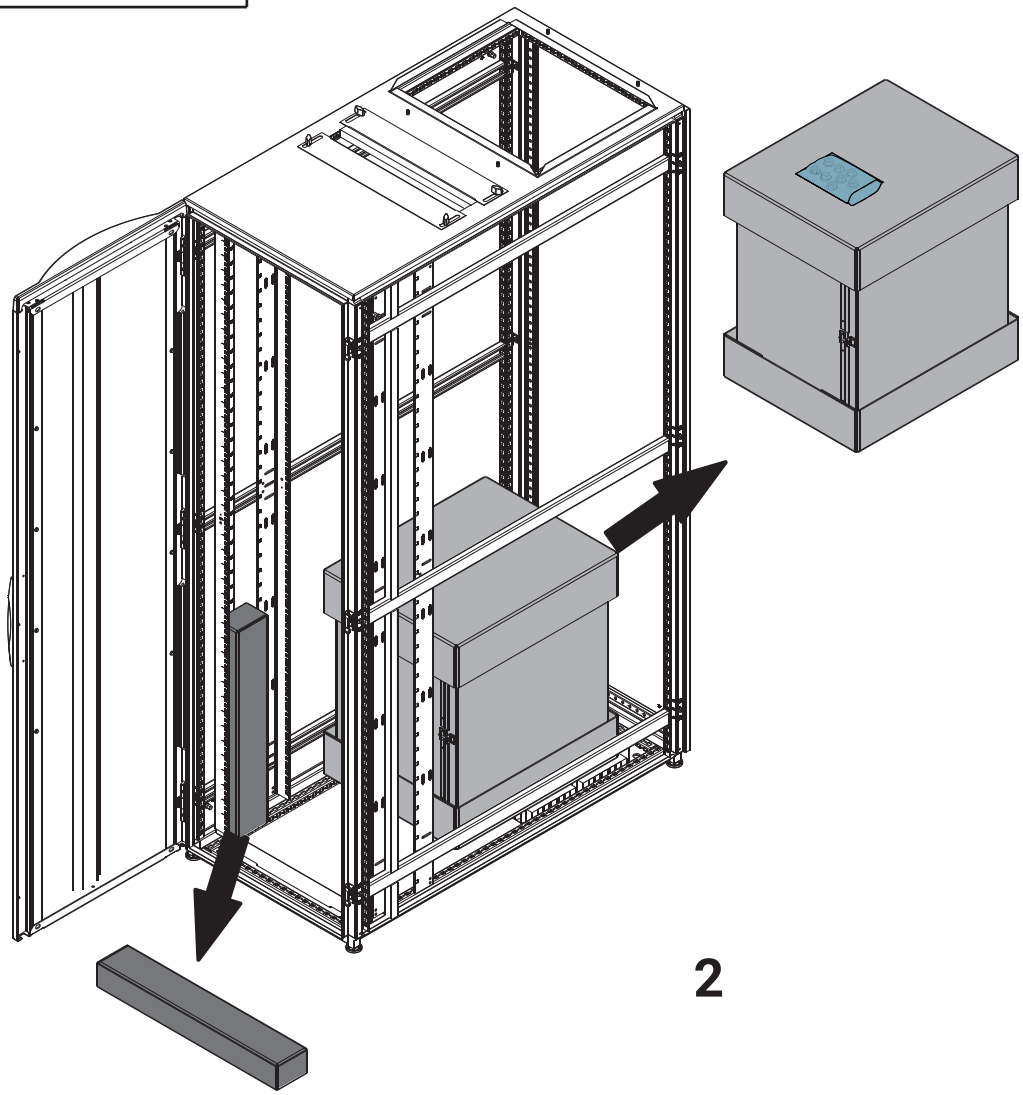

2

© 2020 Hoffman Enclosures Inc.

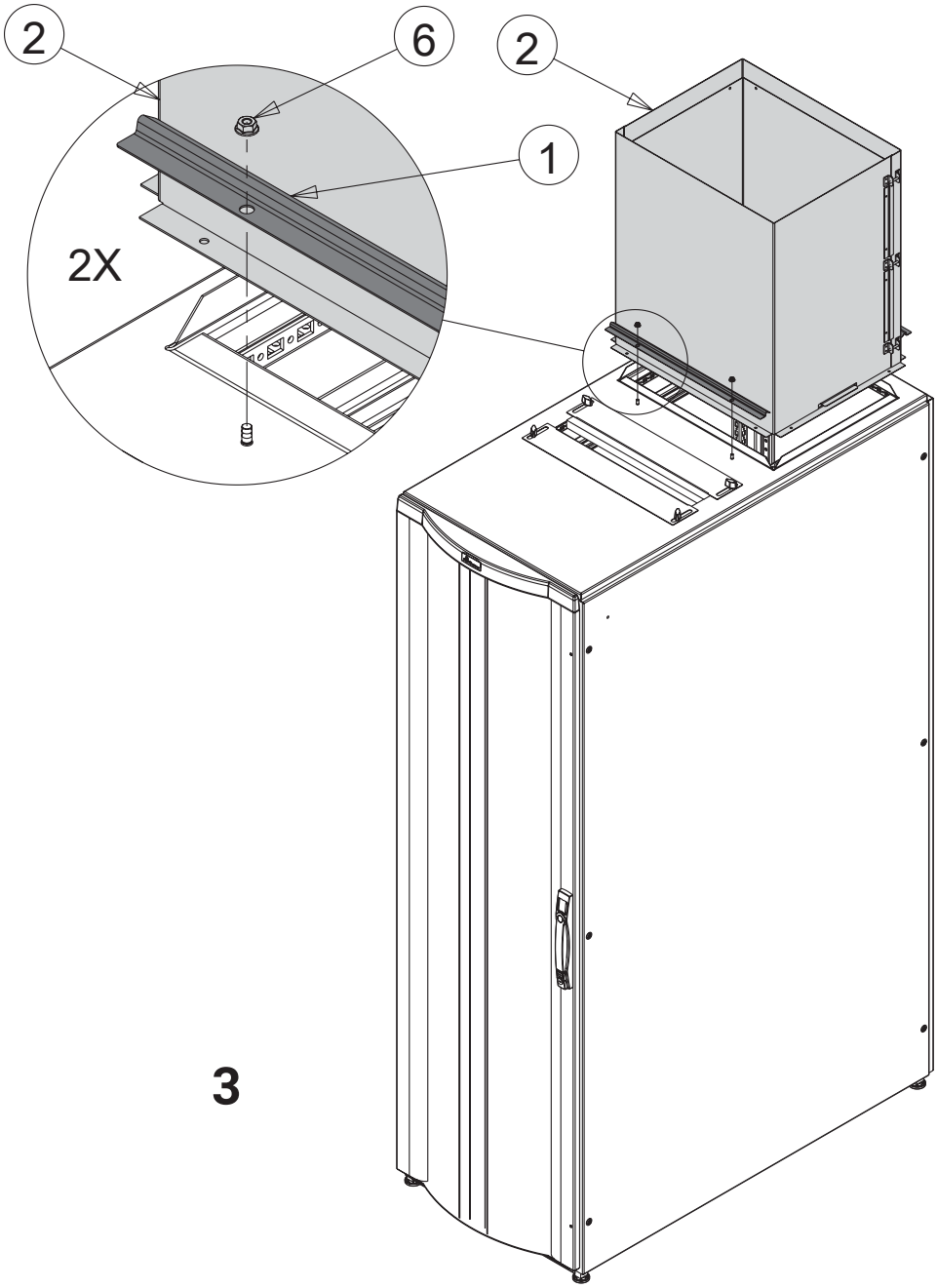

3

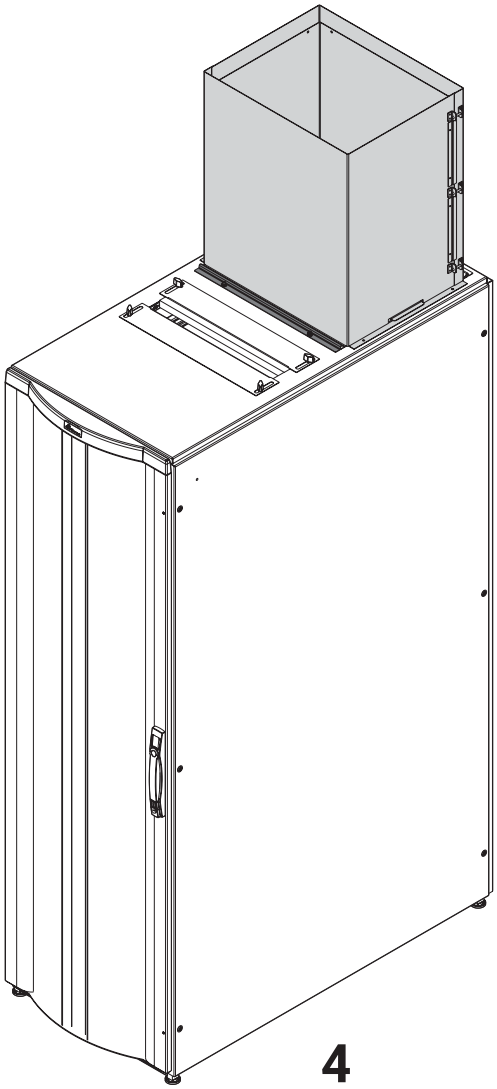

4

© 2020 Hoffman Enclosures Inc.

Mounting Option 1
Opción de montaje 1
Option de montage 1
Montagemöglichkeit 1

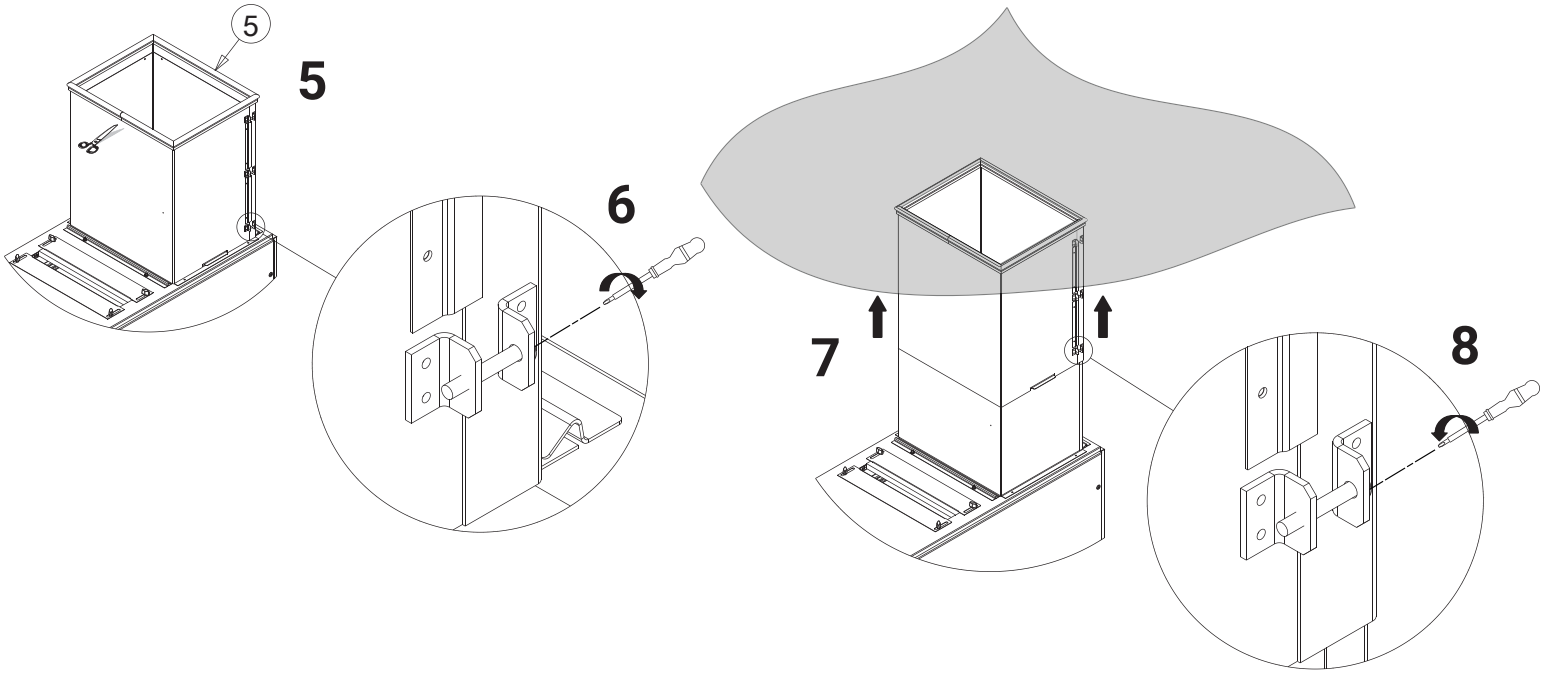

Mounting Option 2
Opción de montaje 2
Option de montage 2
Montagemöglichkeit 2

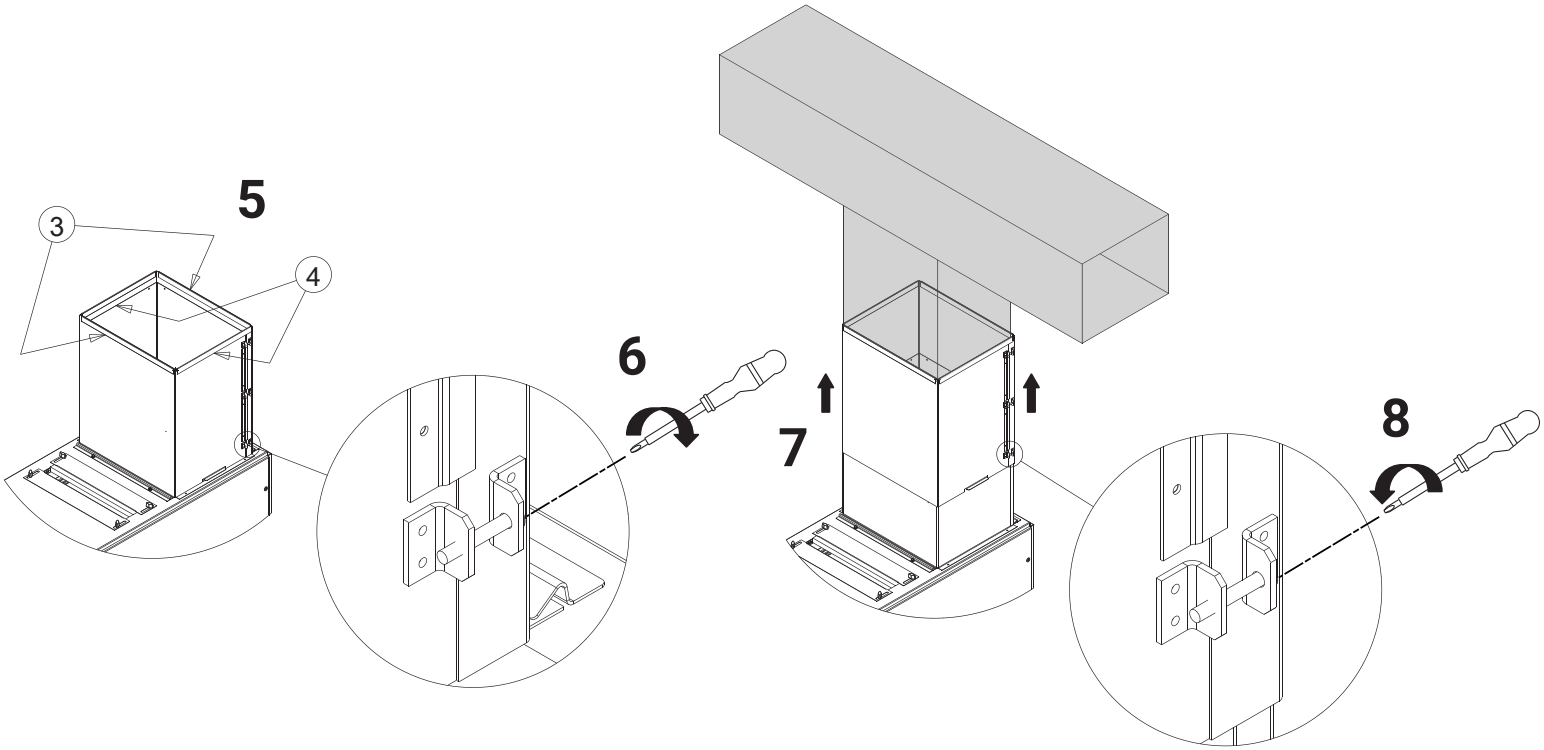

© 2020 Hoffman Enclosures Inc.