PROLINE G2

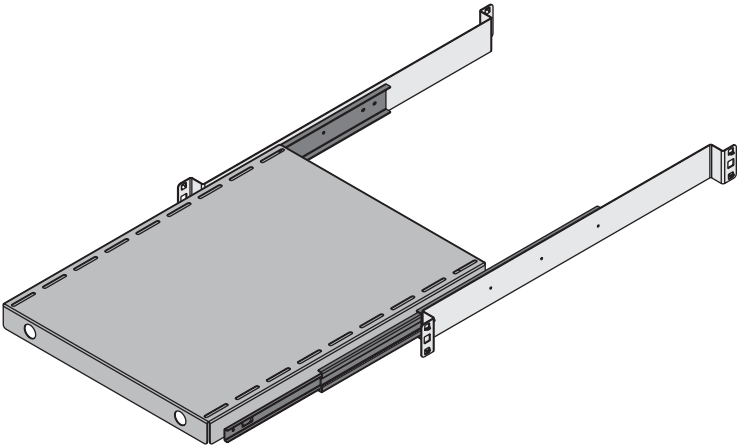

 © 2018 Hoffman Enclosures Inc. PH 763 422 2211 • nVent.com/HOFFMAN P/N 89133925 89133926

1 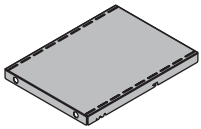 (1x)	2 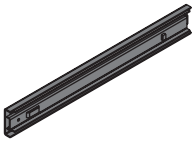 (2x)	3 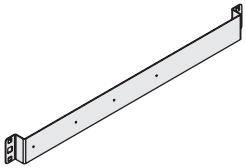 (2x)
4 M4X8 (10x)	5 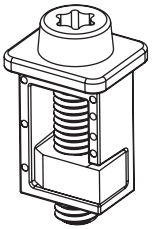 (4x)	6 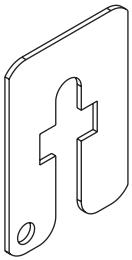 (4x)
7 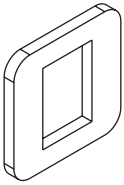 (4x)		

© 2018 Hoffman Enclosures Inc.

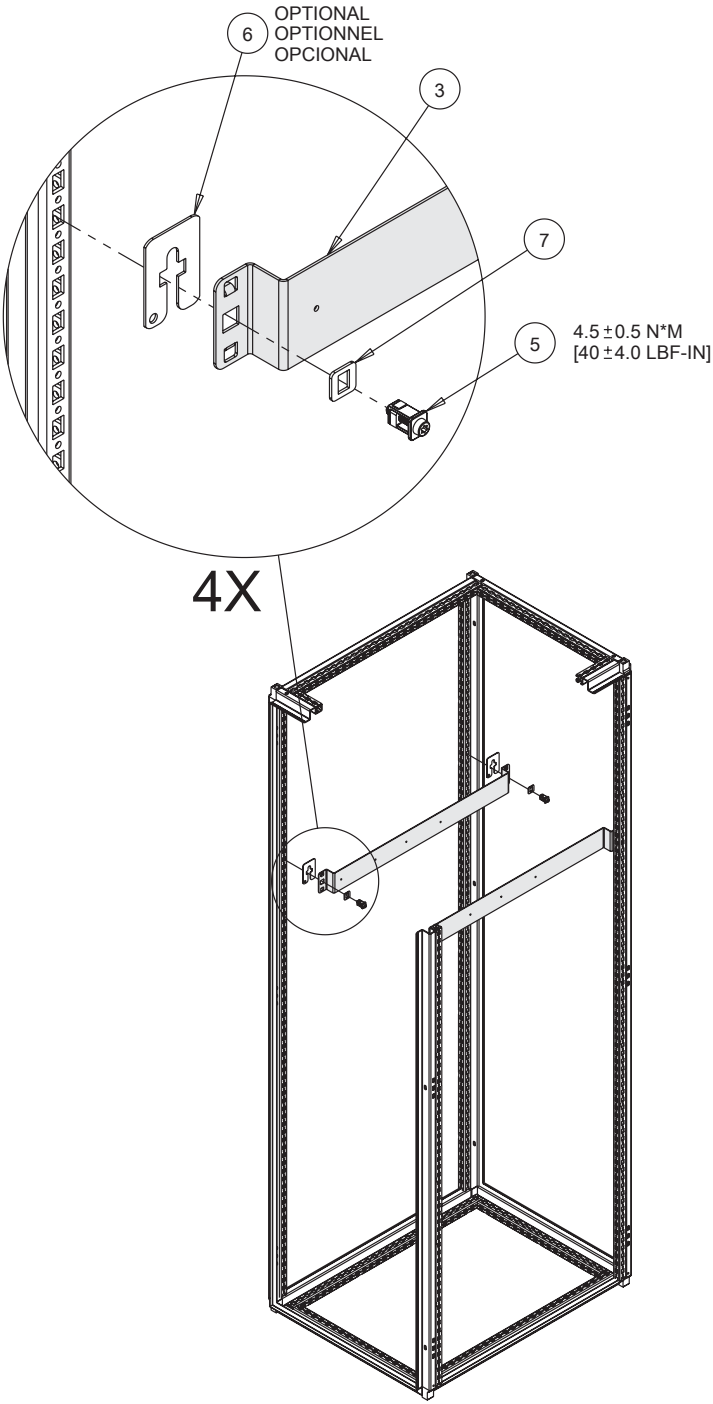

© 2018 Hoffman Enclosures Inc.

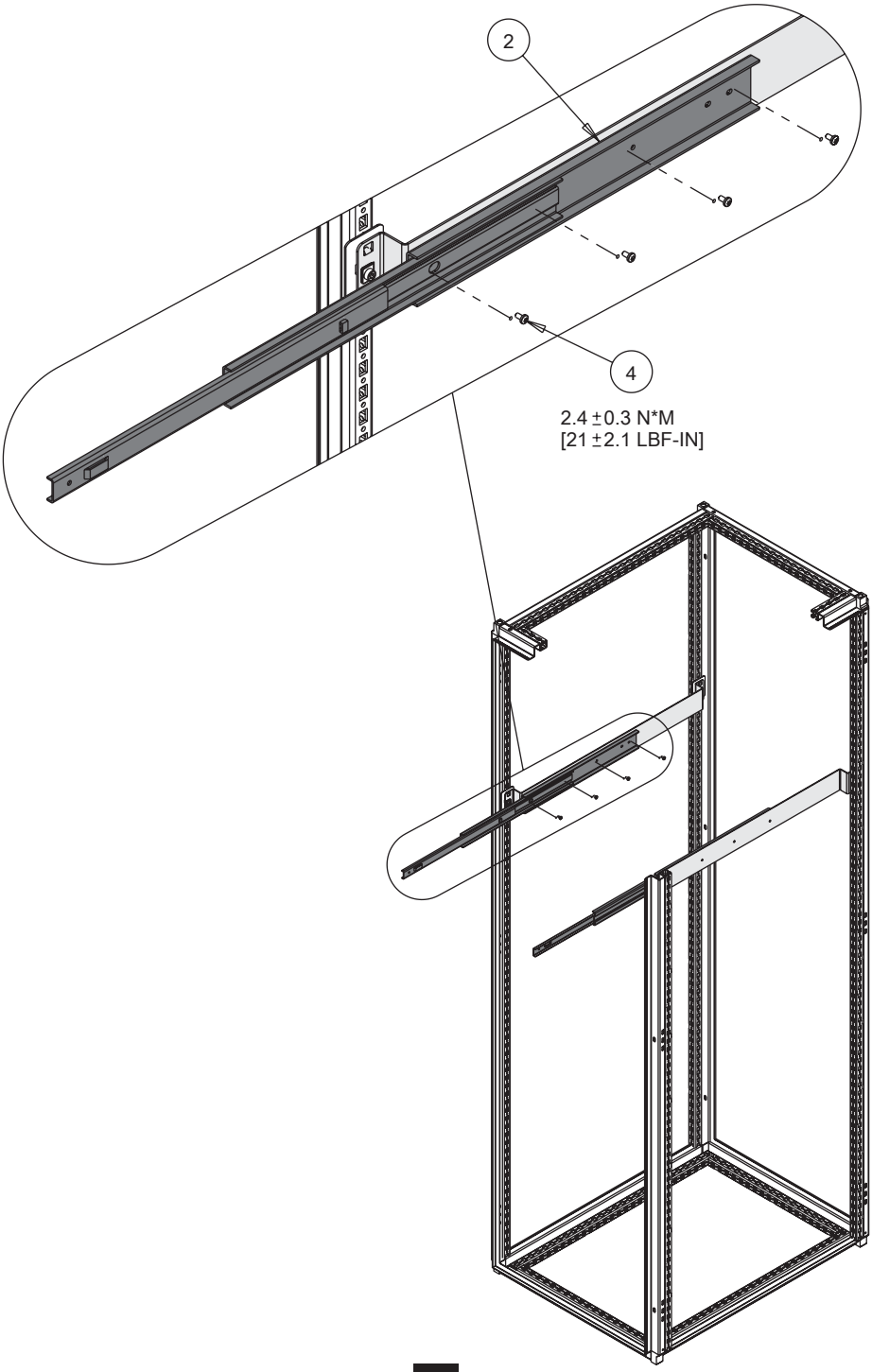

2

© 2018 Hoffman Enclosures Inc.

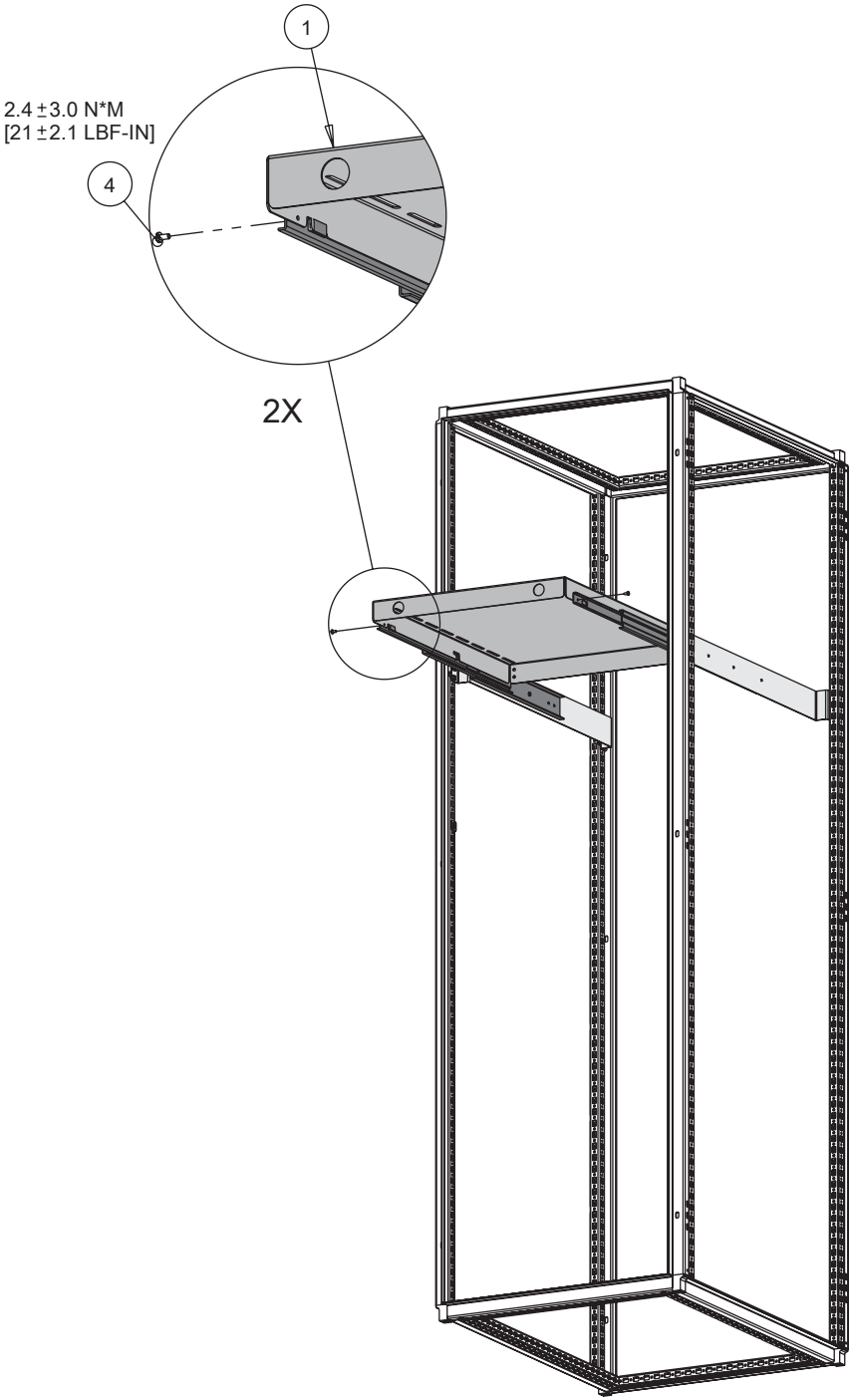

3

© 2018 Hoffman Enclosures Inc.

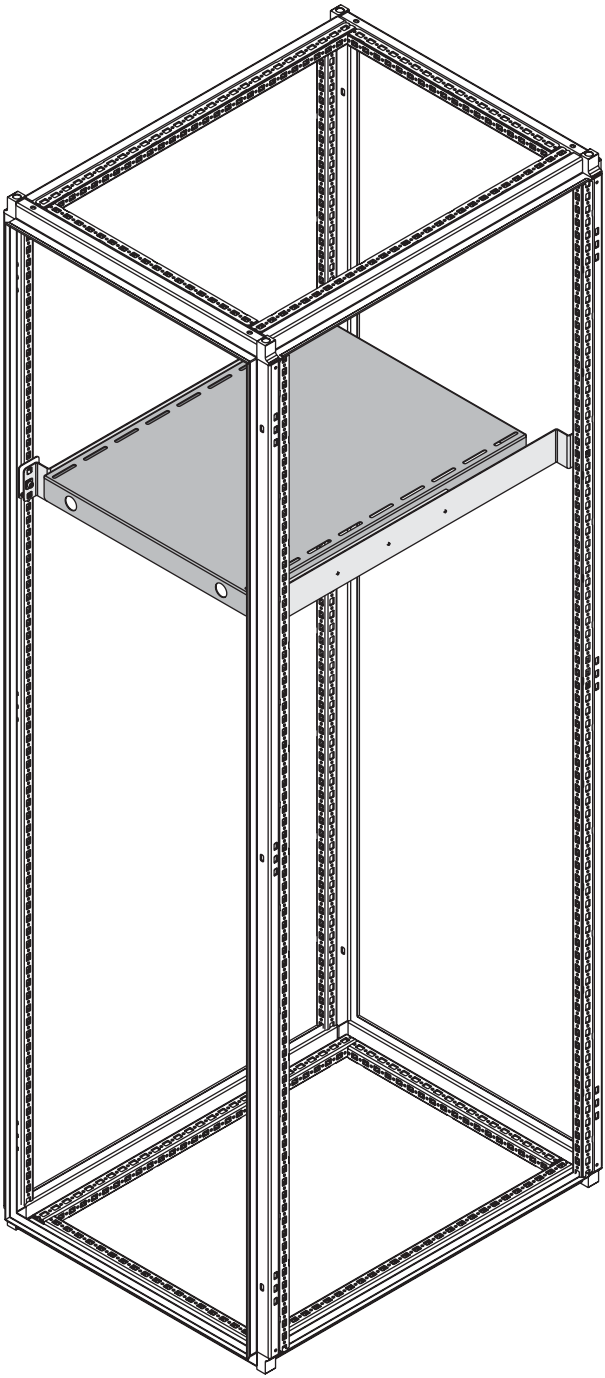

4

© 2018 Hoffman Enclosures Inc.

© 2018 Hoffman Enclosures Inc.

© 2018 Hoffman Enclosures Inc.
PH 763 422 2211 • nVent.com/HOFFMAN
P/N 89133925

89133926