Sealing Plates for Lay–In Wireway
Dichtung Platten für Legen–In Wireway
Plats de cachetage pour Étendre–Dans Wireway
Placas del lacre para Poner–En Wireway

1. Assemble sections or fittings as shown in figure 1. Do not insert top flange screw on hinge side.
2. Install quick release, flat sealing plate as shown in figure 2. Insert shoulder bolt through flanges and leave in open position like the hinged covers.
3. Install wiring.
4. Install 90 degree angle sealing plate as shown in figure 3. For box entries, assemble a closure plate or joining lay–in to regular wireway (see notes 1 and 2 below).

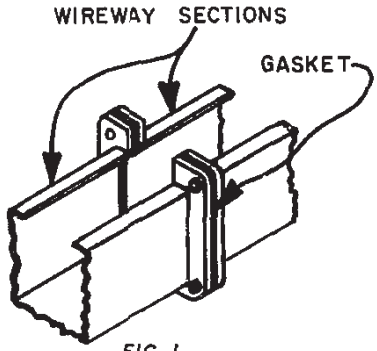

FIG. 1

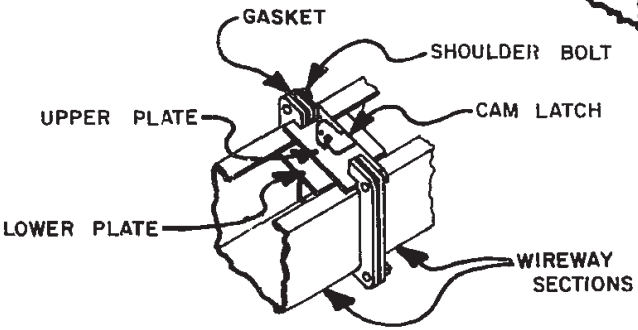

QUICK RELEASE FLAT SEALING PLATE INSTALLED

FIG. 2

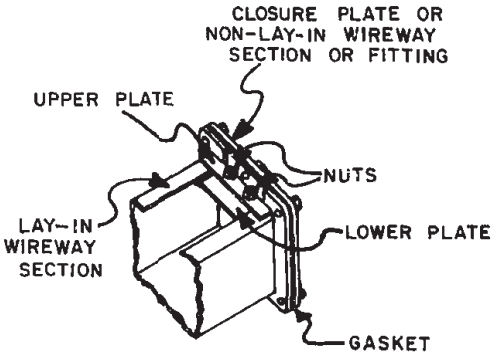

90° ANGLE SEALING PLATE INSTALLED

FIG. 3

NOTE 1: When joining lay–in wireway to regular wireway, the flange of the regular wireway must be drilled using upper angle plate as a template. This applies only to 2.5 x 2.5 and 4 x 4 sizes.

NOTE 2: When entering a control enclosure or box with lay–in wireway, use the connector flange as a template for the cutout. Use the connector flange and a gasket inside and place a gasket between the lay–in section and control enclosure or box. Install 90 degree angle sealing plate as shown in figure 3.

 © 2018 Hoffman Enclosures Inc. PH 763 422 2211 • nVent.com/HOFFMAN P/N 87743523 87569707