Small Ventilator

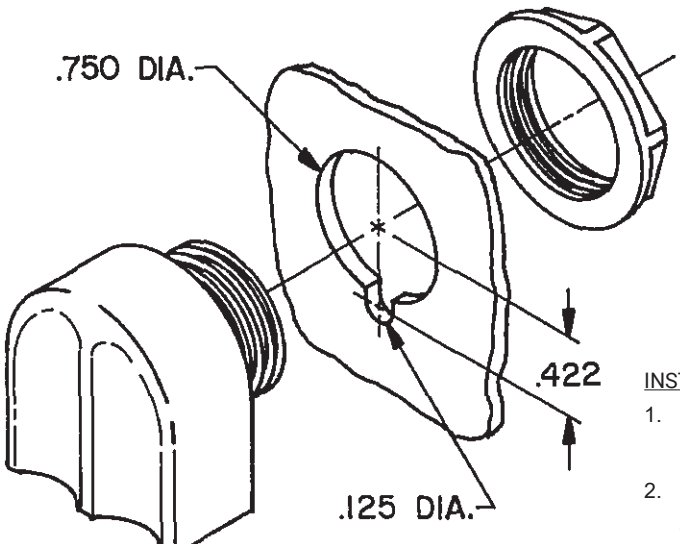

INSTRUCTIONS

1. Drill or punch hole in enclosure wall per dimensions shown.
2. Install vent through enclosure wall and fasten with nut from inside enclosure.

© 2019 Hoffman Enclosures Inc.