SPECTRACOOL WITH ADVANCED CORROSION PROTECTION OVERVIEW

SPECTRACOOL Corrosion Protection Solutions provide the industry leading corrosion protection to components critical to the performance of the air conditioner. For applications where air conditioners are exposed to harsh, corrosive, chemical elements. Hoffman utilizes advanced coatings to protect the critical components, extending their life and optimizing the extended performance level of the product.

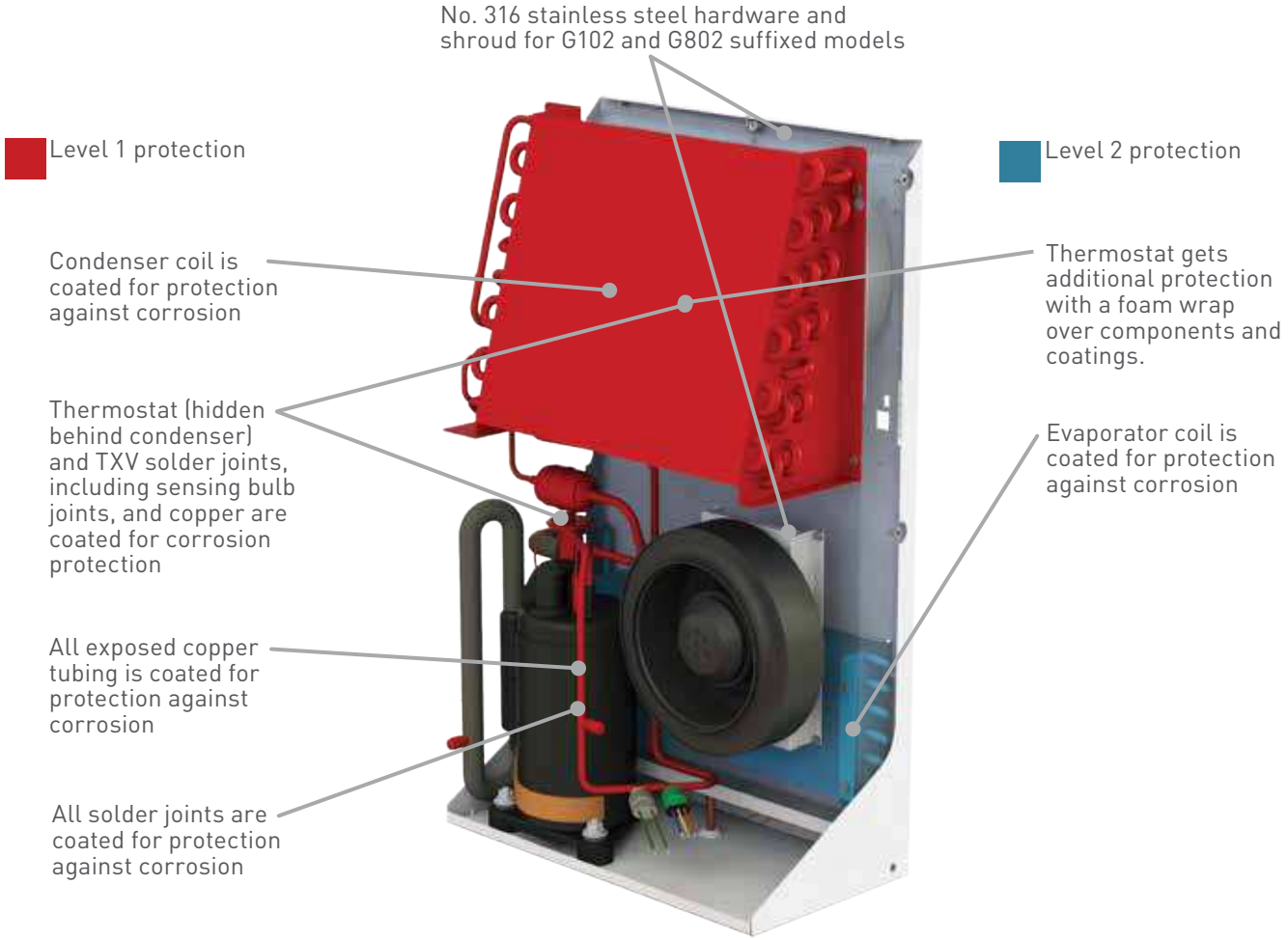

SPECTRACOOL WITH ADVANCED CORROSION PROTECTION

G57
20000 BTU/Hr.
5861 Watt

G52
8000/12000 BTU/Hr.
2300/3500 Watt

G28
4000/6000 BTU/Hr.
1172/1758 Watt

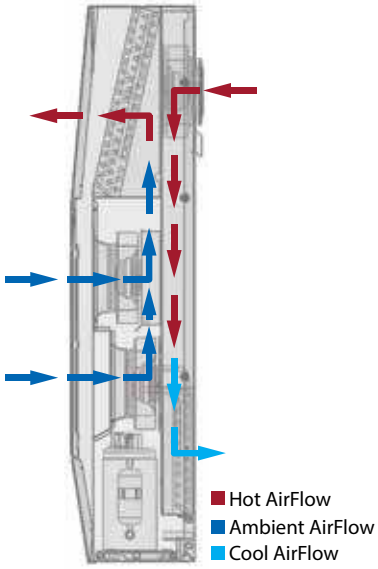

INDUSTRY STANDARDS

UL/cUL Listed; Type 12, 3R, 4; 4X optional; File No. SA6453

CE
EAC
IP 56 Internal Loop
IP 34 on External Loop
Telcordia GR-487 capable (Outdoor)

APPLICATION

- Industrial automation
- Telecommunications equipment
- Waste water treatment systems
- Package handling equipment
- Security and defense systems
- Oil and gas
- Water treatment facilities
- Chemical manufacturing

FEATURES

- Two levels of corrosion protection:
  - Level 1 - Protective coatings on all exposed copper tubing and solder joints, condenser coil and thermostat.
  - Level 2 - All protective coatings in Level 1 plus a coated evaporator coil. Foam wrap added over protective coatings on thermostat.
- Energy-efficient rotary compressor on most models
- R407c and R134a earth-friendly refrigerants
- 115, 230 and 400/460 VAC 3-phase power input on most models
- UL Listed to save customers time and money with agency approvals
- Operating temperature range from -40 F/-40 C to 131 F/55 C
- Exterior and partially recessed mounting options
- Attractive industrial design with minimal use of visible fasteners
- Dual condenser-side air movers for performance redundancy on G52 and G57 models
- Galvanized sheet-metal cover for rugged factory and outdoor environments
- Easy-mount flanges for simple installation
- Cut-out adapter options for enclosures with GENESIS and T-Series air conditioners, enable users to easily transition to the new unit
- Dust-resistant condenser coil allows the unit to be run filterless in most applications
- Cleanable, reusable aluminum mesh filter protects coils for maximum cooling performance
- Mounting hardware, gaskets and user manual furnished with the unit
- Every unit functionally tested before shipping
- Standard models include:
  - Active condensate management with heater strip
  - Power-off relay for door switch and other system requirements
  - Telcordia GR-487 capable
  - Corrosion-resistant components
  - Malfunction switch
  - Compressor heater
  - Head pressure control

SPECIFICATIONS

- Nominal cooling capacity:
  G28 4000 & 6000 BTU/Hr. (1172 and 1758 W)
  G52 8000 & 12000 BTU/Hr. (2344 and 3516 W)
  G57 20000 BTU/Hr. (5861 W)
- Operating temperature range from -40 F/-40 C to 131 F/55 C

FINISH

- RAL 7035 light-gray, semi-textured powder-coat paint
- No. 4 brushed 316 stainless steel
- Other colors and textures available

NOTES

Visit **http://hoffman.nvent.com/en/hoffman/SPECTRACOOL-Remote-Access-Control-472042** for more information regarding SPECTRACOOL Remote Access Control (RAC).

Visit **https://hoffman.nvent.com/en/hoffman/thermal-management** to download 2D and 3D CAD drawings into the overall design of your electrical system.

Performance Data **G28 Models 4000/6000 BTU/Hr. (1172/1758 Watt)**

CATALOG NUMBER						
Level 1 Painted Galvanized - G700	G280416G700	G280426G700	G280446G700	G280616G700	G280626G700	G280646G700
Level 1 Stainless Steel 316 - G102	G280416G102	G280426G102	G280446G102	G280616G102	G280626G102	G280646G102
Level 2 Painted Galvanized - G800	G280416G800	G280426G800	G280446G800	G280616G800	G280626G800	G280646G800
Level 2 Painted with Remote Access Control - G360*	G280416G360	G280426G360	G280446G360	G280616G360	G280626G360	G280646G360
Level 2 Stainless Steel 316 - G802	G280416G802	G280426G802	G280446G802	G280616G802	G280626G802	G280646G802
COOLING PERFORMANCE						
Nominal:**						
BTU/Hr.	**4000**	**4000**	**4000**	**6000**	**6000**	**6000**
Watts	**1172**	**1172**	**1172**	**1757**	**1757**	**1757**
At 131 F/131 F (55 C/55 C):						
BTU/Hr. (50/60 Hz)	NA/3700	4600/4900	4600/4900	6000/6400	6000/6400	5400/6000
W (50/60 Hz)	NA/1084	1347/1435	1347/1435	1757/1874	1757/1874	1581/1757
At 95 F/95 F (35 C/35 C):						
BTU/Hr. (50/60 Hz)	3300/3410	4300/4600	4324/4655	5600/6000	5600/6000	5054/5685
W (50/60 Hz)	967/1000	1260/1364	1267/1364	1641/1758	1641/1758	1481/1666
Refrigerant	R134A	R407C	R134A	R407C	R407C	R134A
Refrigerant Charge (ounces/grams)	12/340	20/567	16/454	20/567	20/567	16/454
Operating Temperature Range:						
Maximum (°F/°C)	131 F/55 C	131 F/55 C	131 F/55 C	131 F/55 C	131 F/55 C	131 F/55 C
Minimum (°F/°C)	-40 F/-40 C	-40 F/-40 C	-40 F/-40 C	-40 F/-40 C	-40 F/-40 C	-40 F/-40 C
Air Flow at 0 Static Pressure:						
Internal loop 50 Hz (CFM / m^3/hr.)	151/256	189/321	189/321	189/321	189/321	189/321
External loop 50 Hz (CFM / m^3/hr.)	284/482	291/494	291/494	291/494	291/494	291/494
Internal loop 60 Hz (CFM / m^3/hr.)	183/310	221/375	221/375	221/375	221/375	221/375
External loop 60 Hz (CFM / m^3/hr.)	290/492	300/509	300/509	300/509	300/509	300/509
ELECTRICAL DATA						
Rated Voltage	**115**	**230**	**400/460 3~**	**115**	**230**	**400/460 3~**
Frequency (Hz)	50/60	50/60	50/60	50/60	50/60	50/60
Operating Range	+/- 10%	+/- 10%	+/- 10%	+/- 10%	+/- 10%	+/- 10%
Max. Power Consumption (W at 50/60 Hz)	465/1055	1058/1334	985/1199	1138.5/1311	1058/1334	985/1199
Max. Nominal Current (A at 50/60 Hz)	10.6/10.3	4.7/5.9	1.7/1.9	10.1/11.6	4.7/5.9	1.7/1.9
Starting Current (A)	36.2	17.7	7.7	36.2	17.7	7.7
Agency Approvals	UL/cUL Listed CE EAC					
Power Input Description	Terminal Block					
ENCLOSURE PROTECTION						
UL Type	Type 12, 3R, 4 Standard Type 4X Stainless Steel Optional					
CONTROLLER						
Description	Basic Mechanical Thermostat					
Thermostat Location	Enclosure Side on All Base Models					
Factory Thermostat Setting (°F/°C)	80/27					
SOUND LEVEL						
At 1.5 Meters	68 dB(A)					
ACCESSORIES						
EASYSWAP Adaptor Plenum (GENESIS M28)	Enables SPECTRACOOL to be mounted to GENESIS M28 air conditioner cutout Catalog Number PLM28G28					
EASYSWAP Adaptor Plenum (T-Series T29)	Enables SPECTRACOOL to be mounted to T-Series T29 air conditioner cutout Catalog Number PLT29G28					
UNIT DIMENSIONS						
Height (in./mm)	28.59/726.2	28.59/726.2	28.59/726.2	28.59/726.2	28.59/726.2	28.59/726.2
Width (in./mm)	17.01/432.1	17.01/432.1	17.01/432.1	17.01/432.1	17.01/432.1	17.01/432.1
Depth (in./mm)	11.18/284.0	10.18/258.6	10.18/258.6	10.18/258.6	10.18/258.6	10.18/258.6
Weight (lb./kg)	84/38	84/38	84/38	84/38	84/38	84/38

*Units with Remote Access Control utilize a digital controller and communicate via EtherNet/IP, Profinet, Modbus TCP/IP and SNMP over ethernet or modbus RTU over USB.

**Performance values are nominal. For actual values, see performance curves.

Performance Curves for G28 Models 4000 BTU/Hr. (1347/1435 Watt)

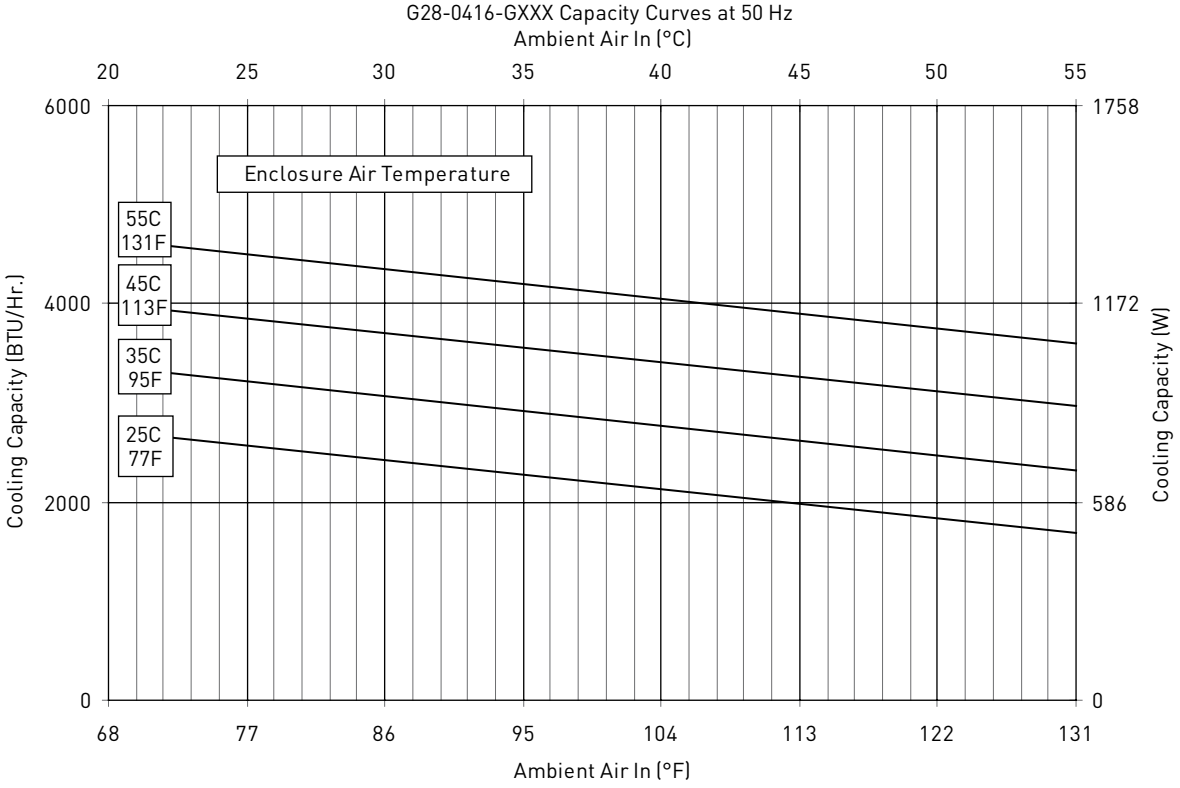

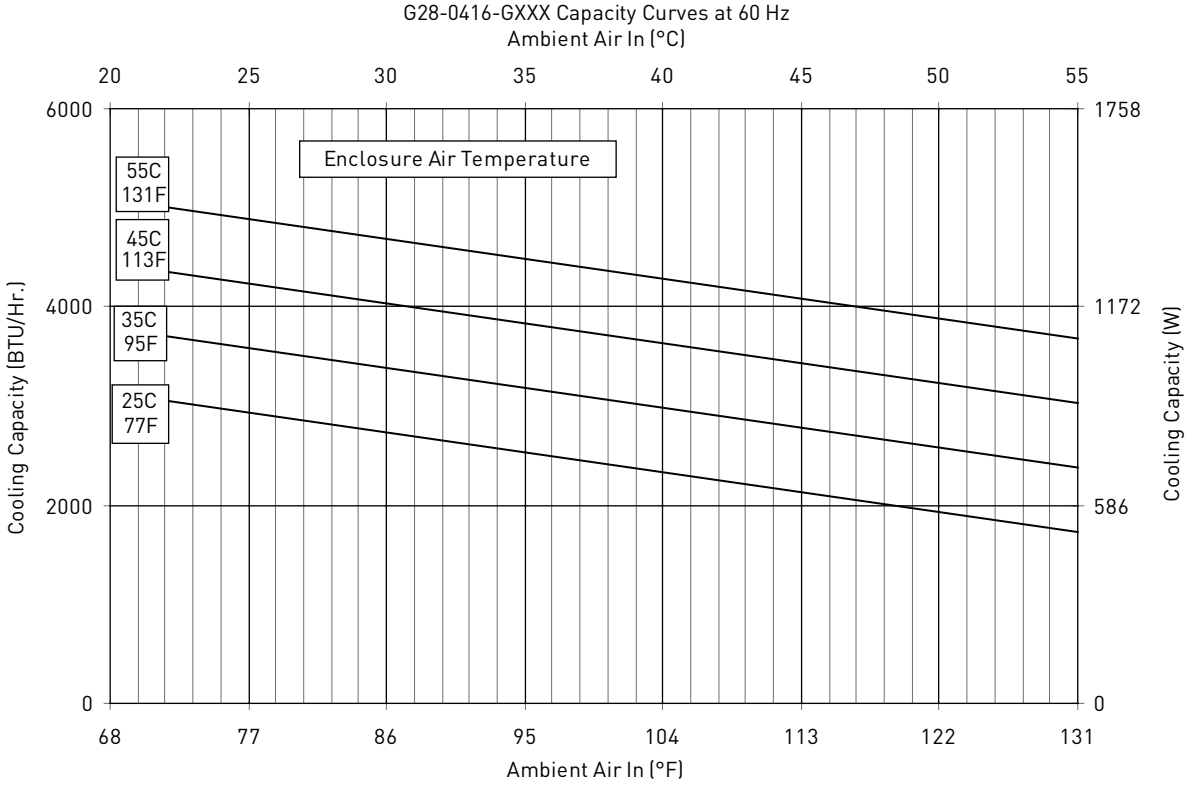

Performance Curves for G28 Models 4000 BTU/Hr. (1347/1435 Watt)

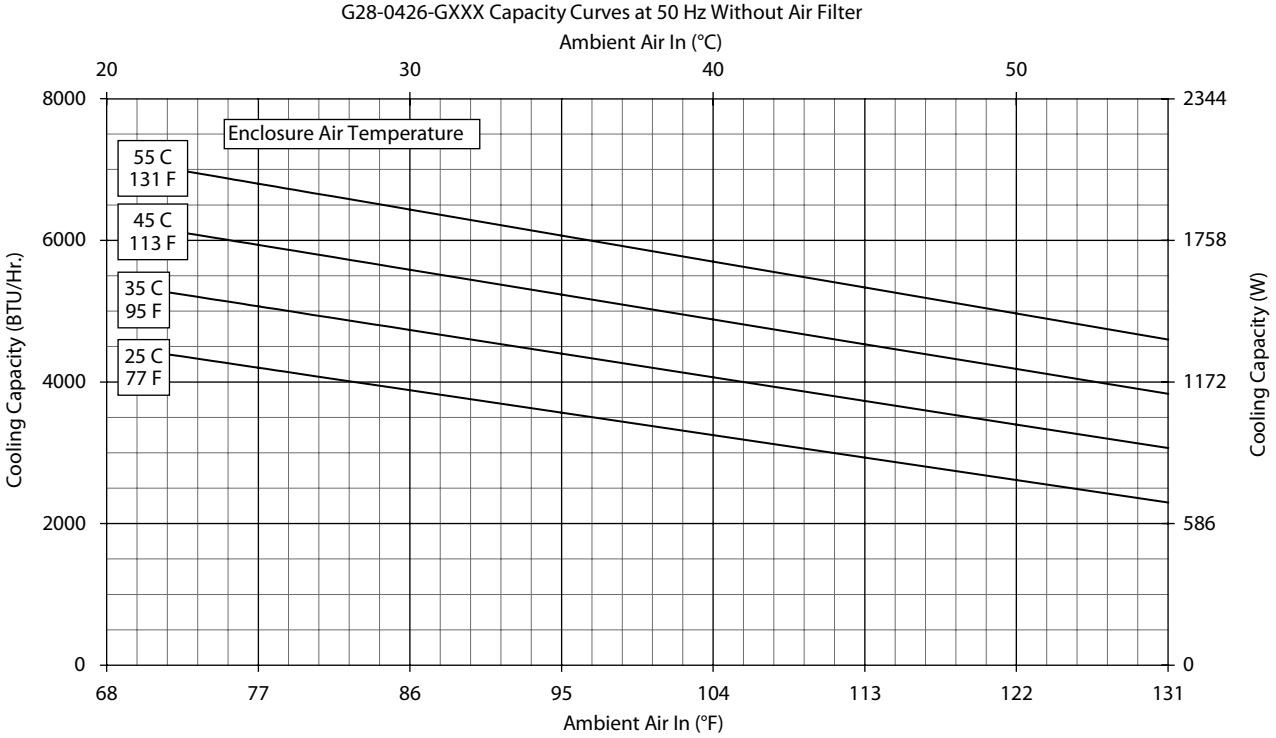

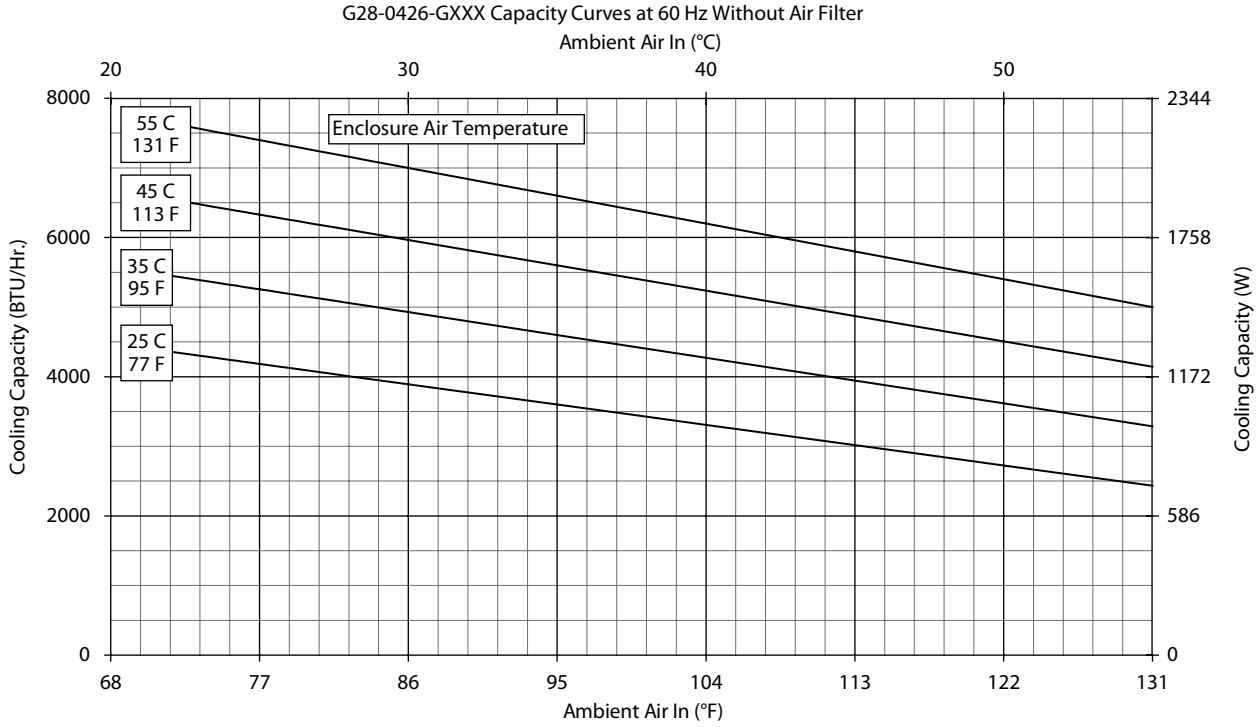

Performance Curves for G28 Models 4000 BTU/Hr. (1347/1435 Watt)

G28-0446-GXXX- Capacity Curves at 50 Hz; Without Filter

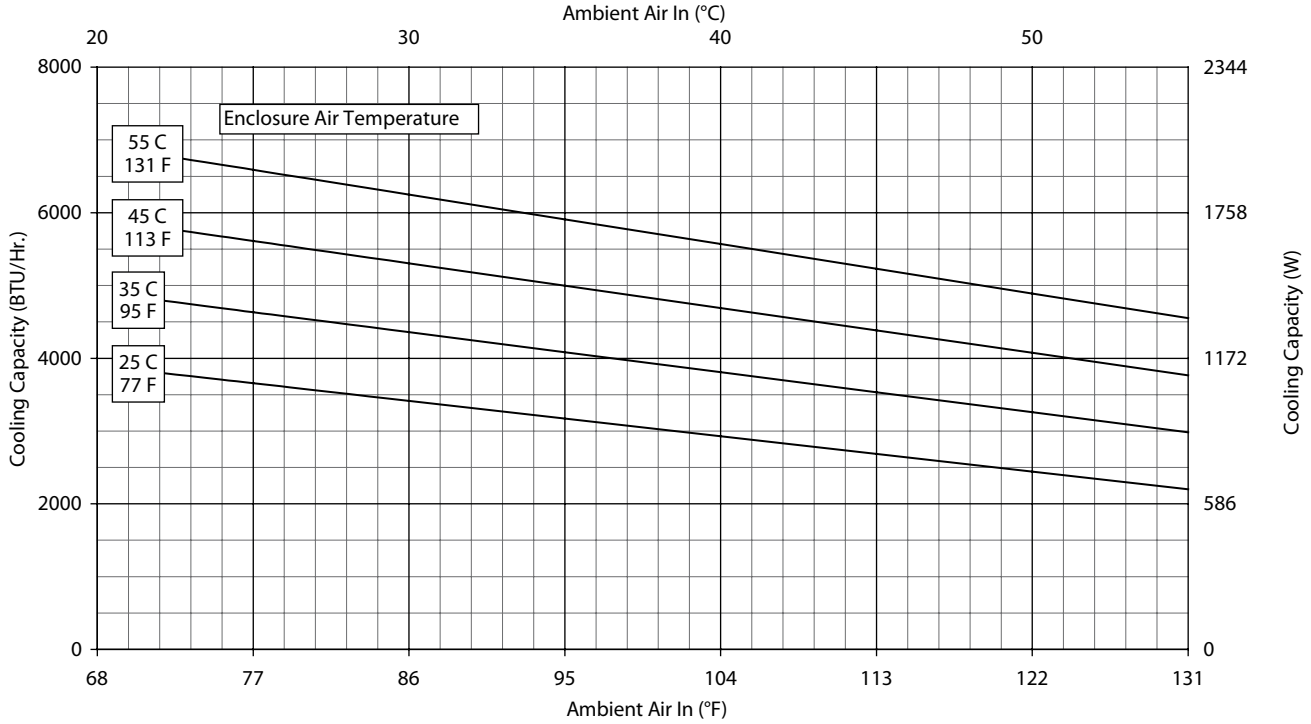

G28-0446-GXXX- Capacity Curves at 60 Hz; Without Filter

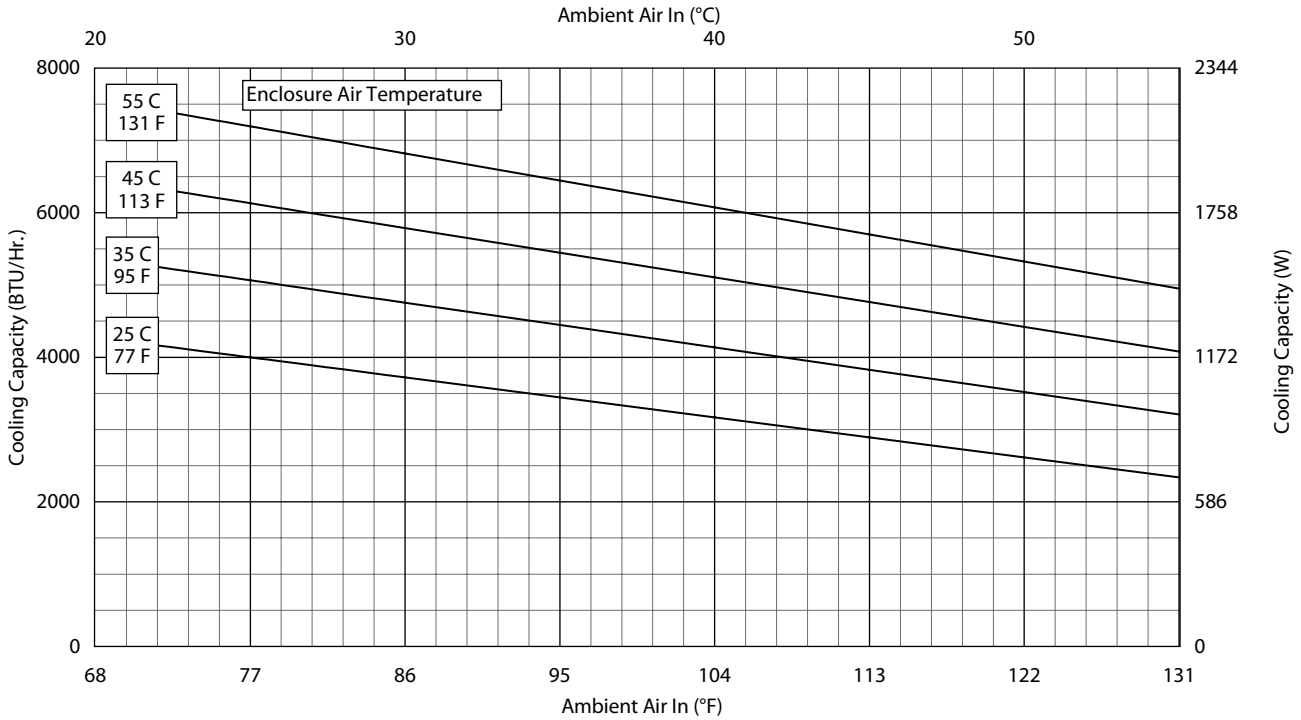

Performance Curves for G28 Models 4000/6000 BTU/Hr. (1172/1758 Watt)

G28-06(1/2)6-GXXX Capacity Curves at 50 Hz Without Filter

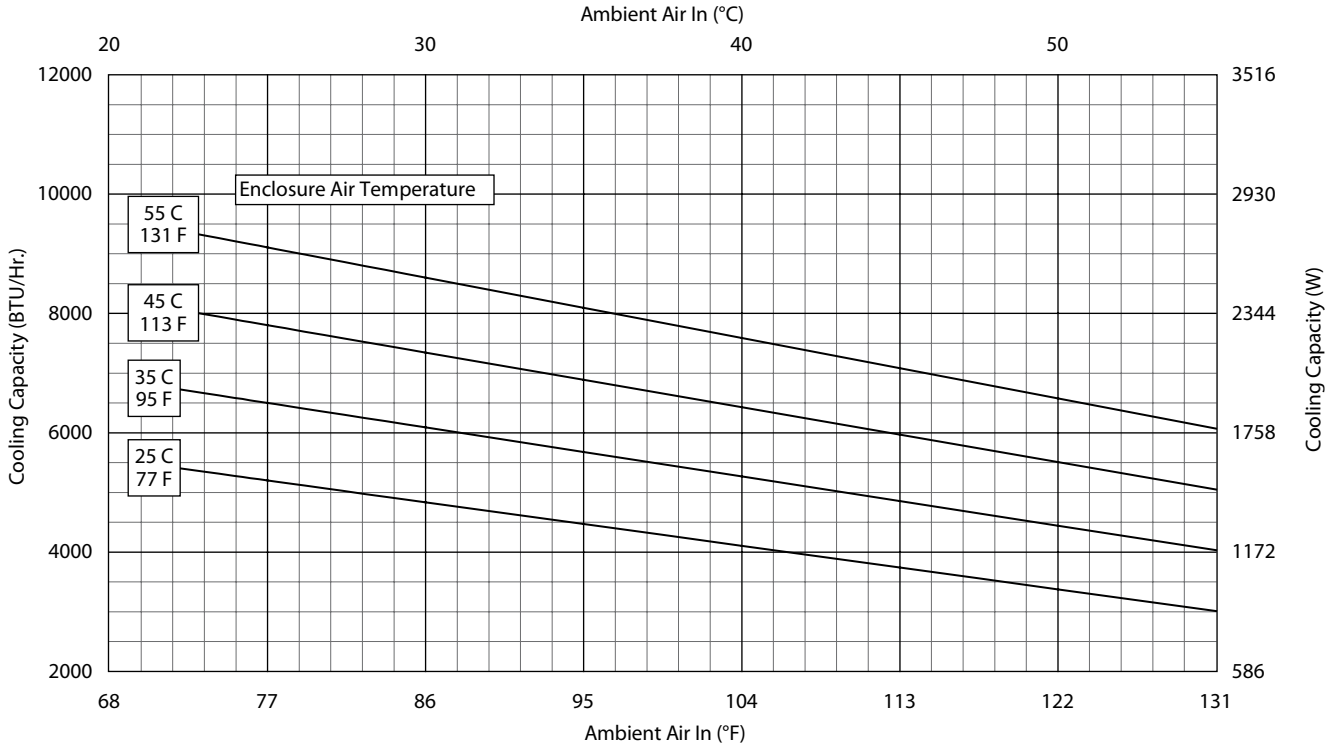

G28-06(1/2)6-G002-P#2 Capacity Curves at 60 Hz Without Filter

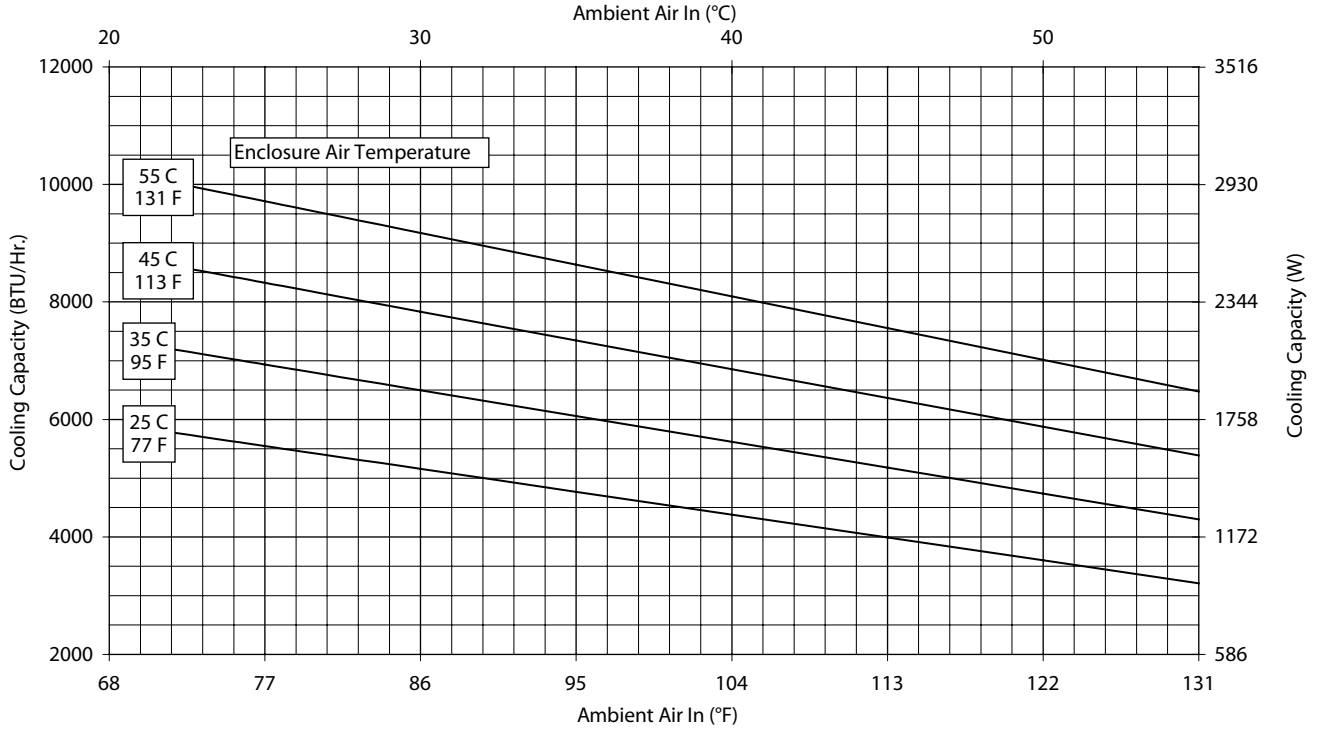

Performance Curves for G28 Models 6000 BTU/Hr. (1758 Watt)

G28-0646-GXXX Performance Curve 400VAC/50Hz Without Air Filter

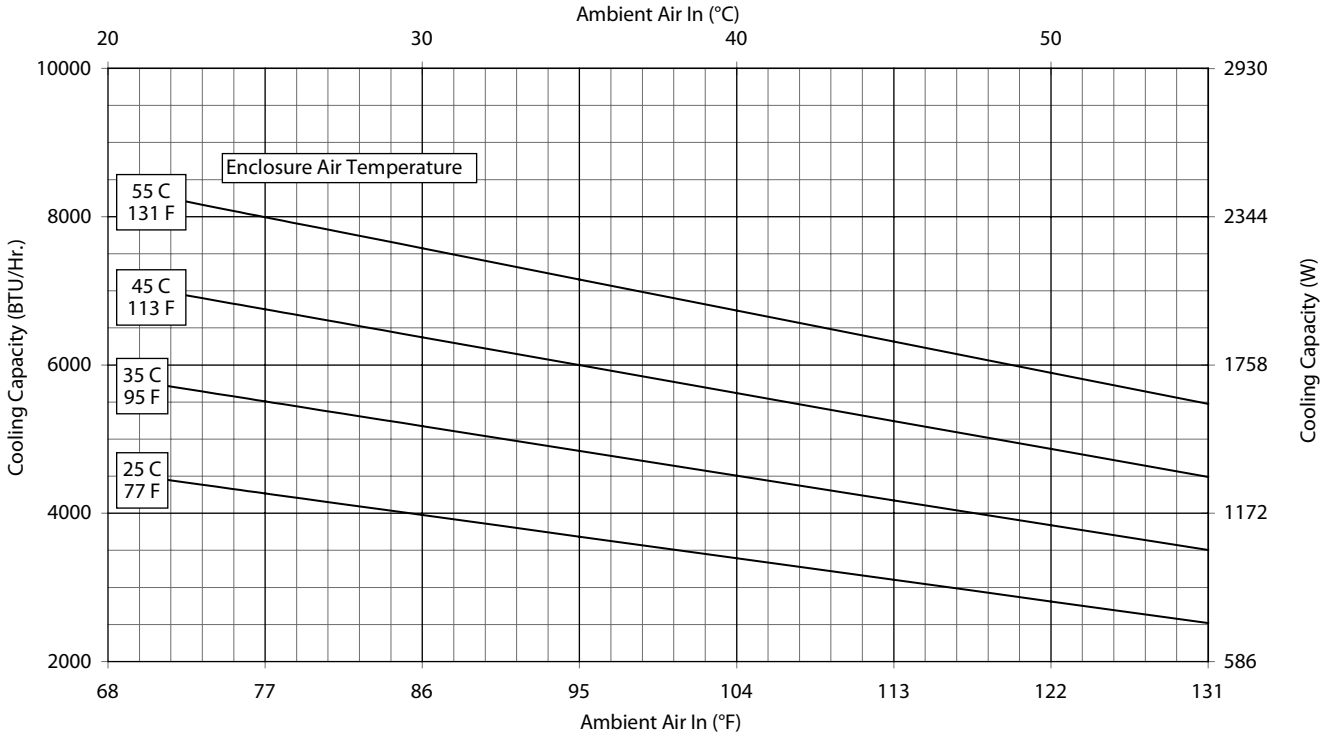

G28-0646-GXXX Performance Curve 460VAC/60Hz Without Air Filter

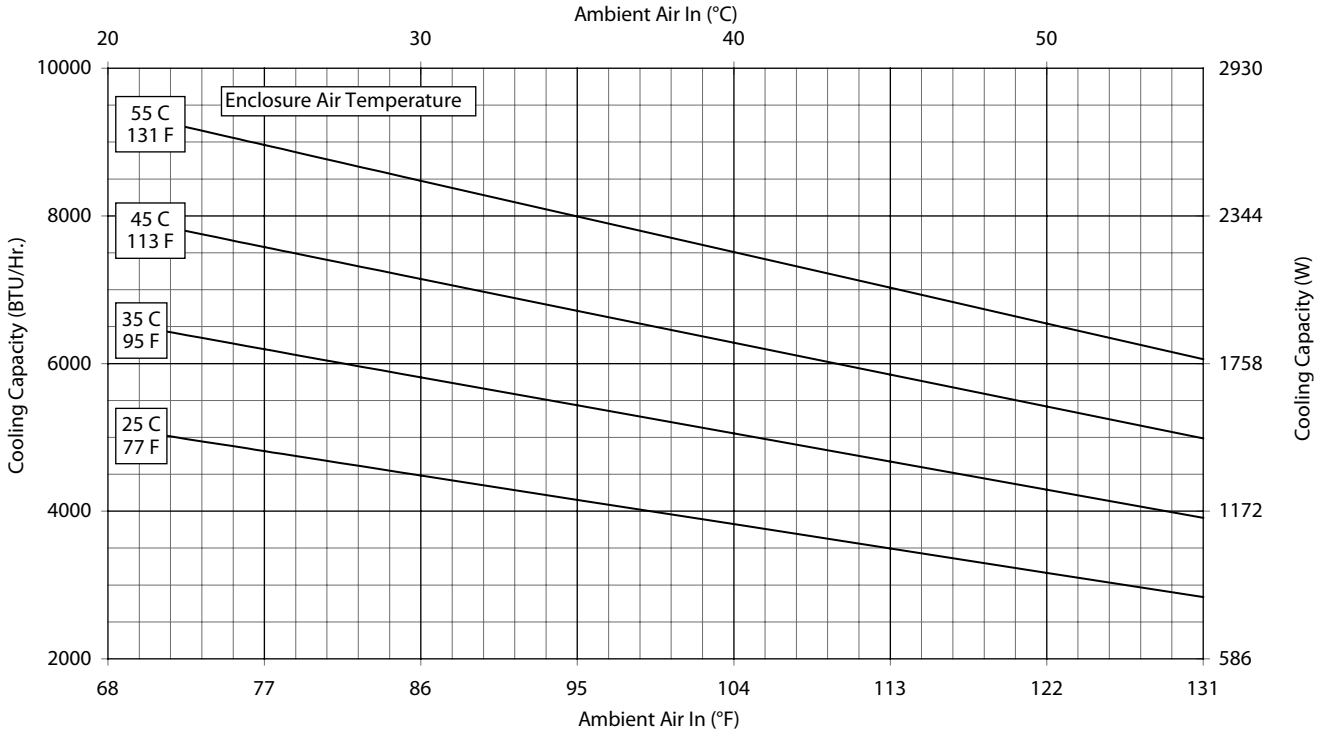

G28 Models 4000 BTU/Hr. 115 V (1172 Watt)

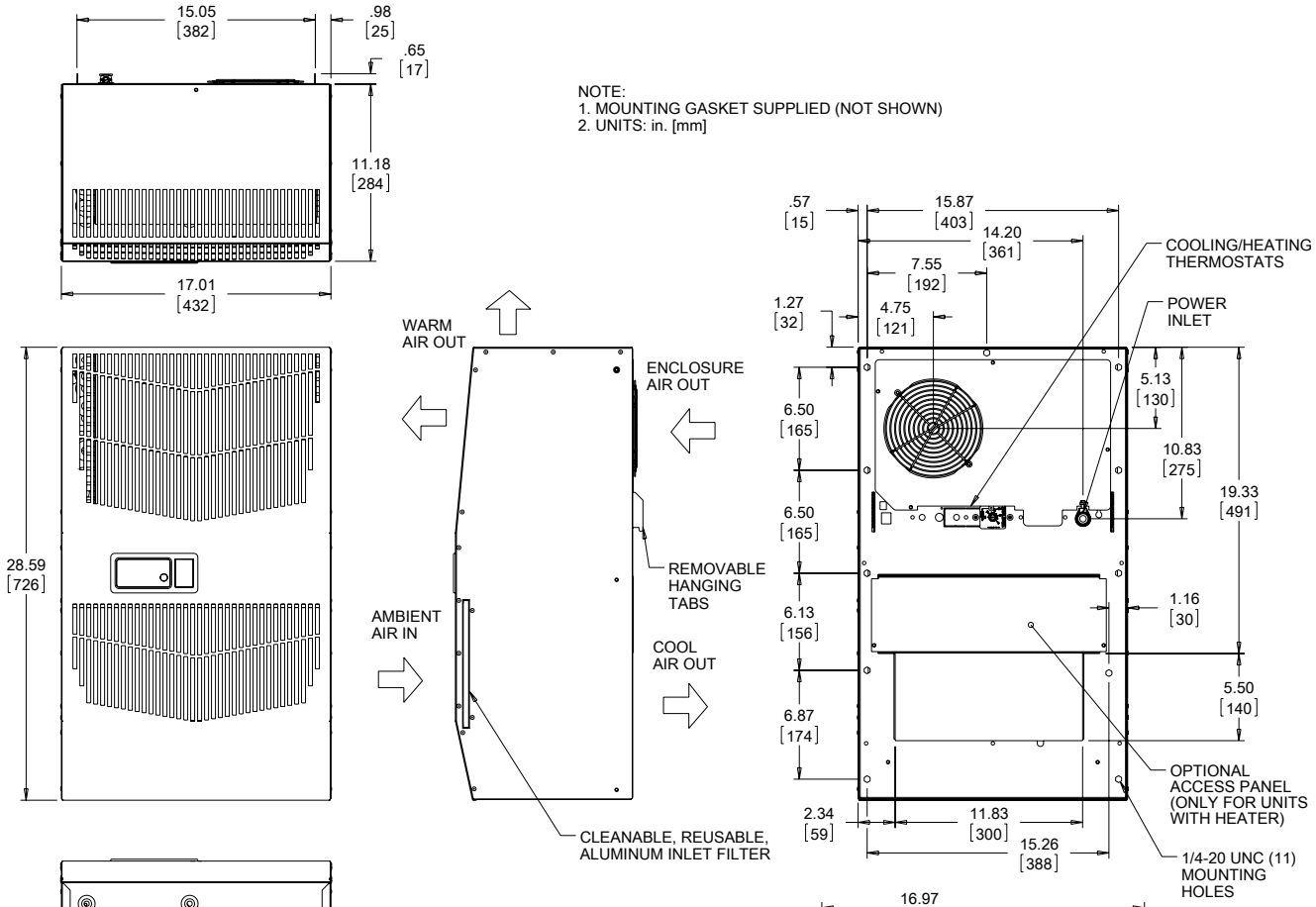

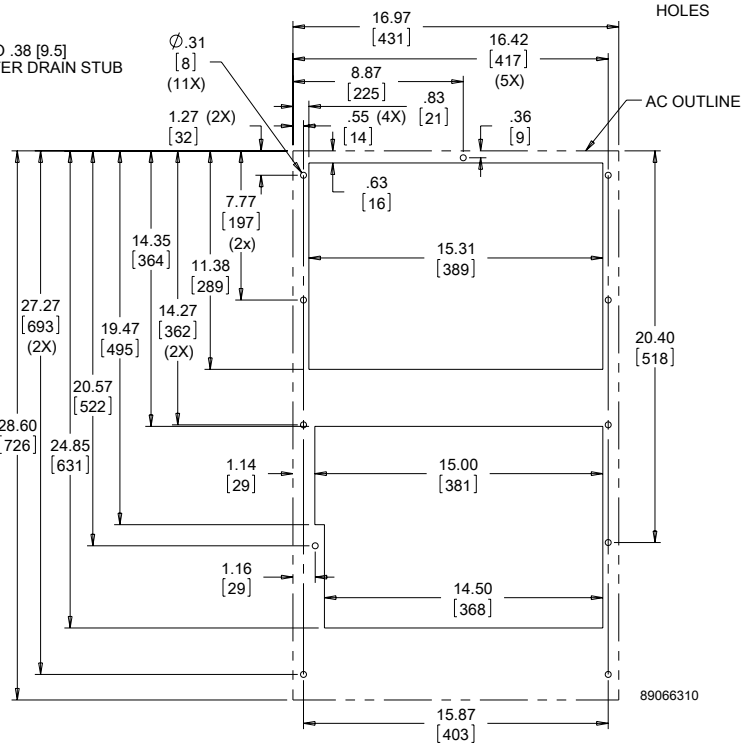

Cutout Dimensions

Visit www.nVent.com/HOFFMAN to download 2D and 3D CAD drawings into the overall design of your electrical system.

G28 Models 4000 BTU/Hr. 230/460 V, 6000 BTU/Hr. 115/230/460 V (1172/1757 Watt)

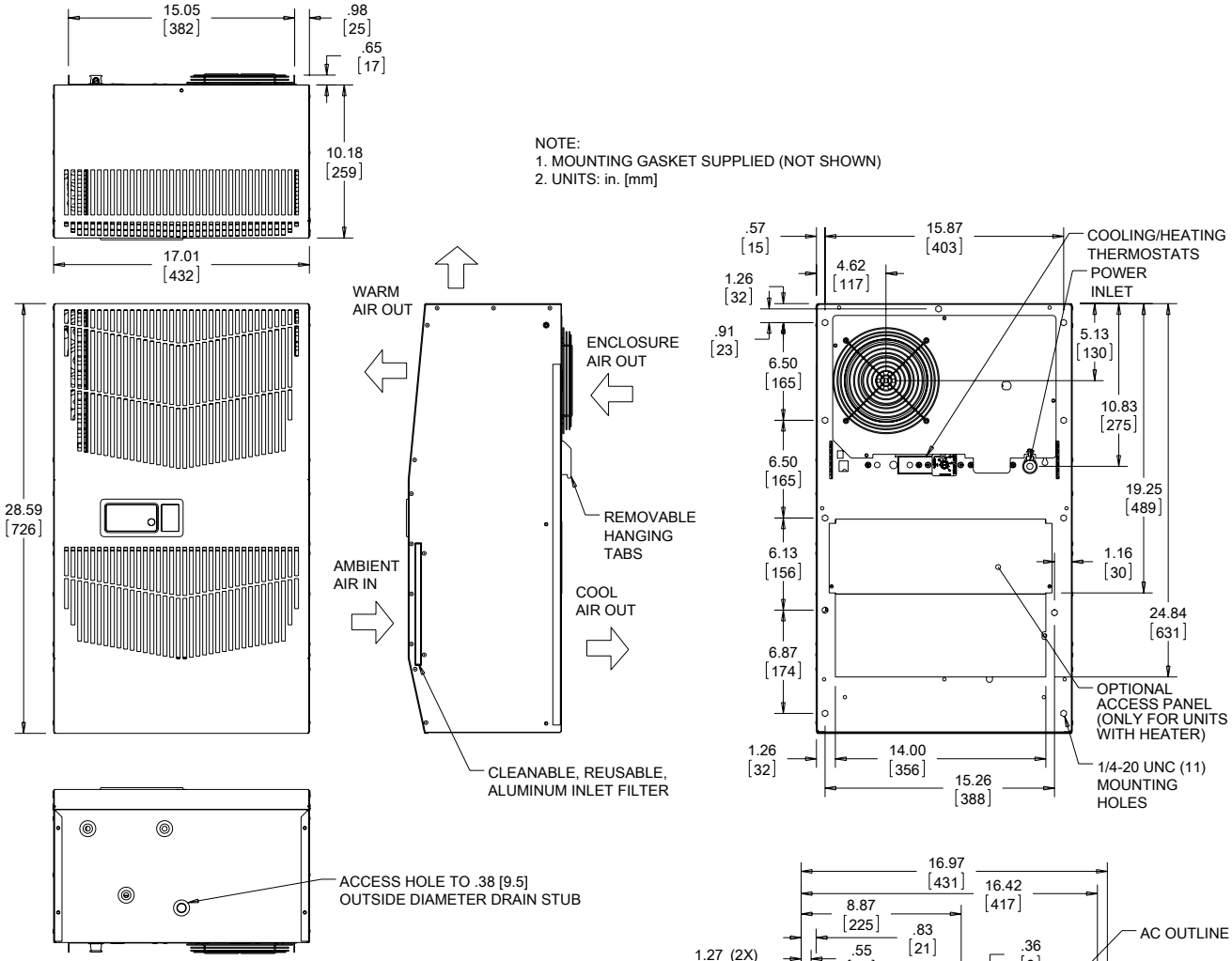

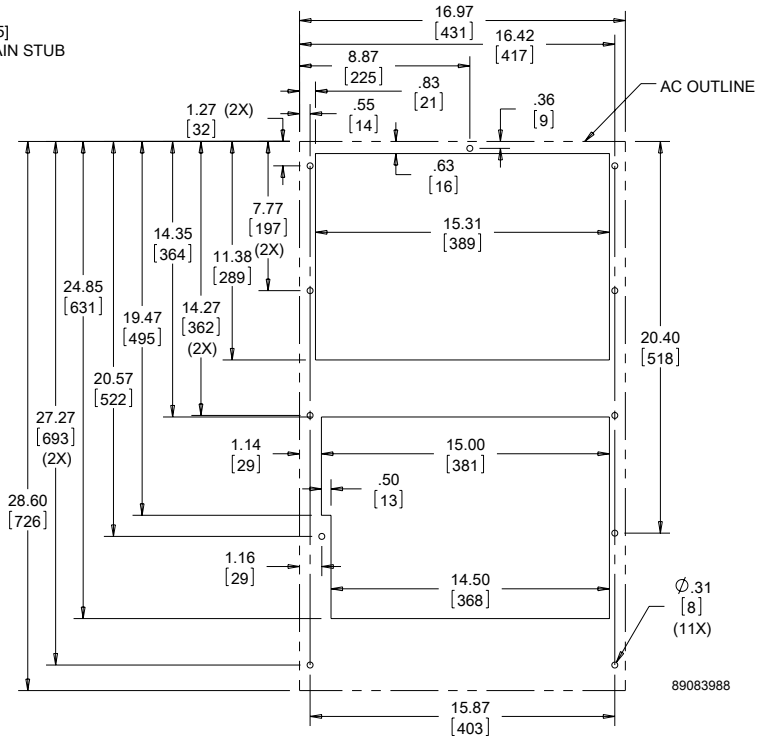

Cutout Dimensions

Visit www.nVent.com/HOFFMAN to download 2D and 3D CAD drawings into the overall design of your electrical system.

G28 Models 4000 BTU/Hr. 115 V (1172 Watt) Partial Recess

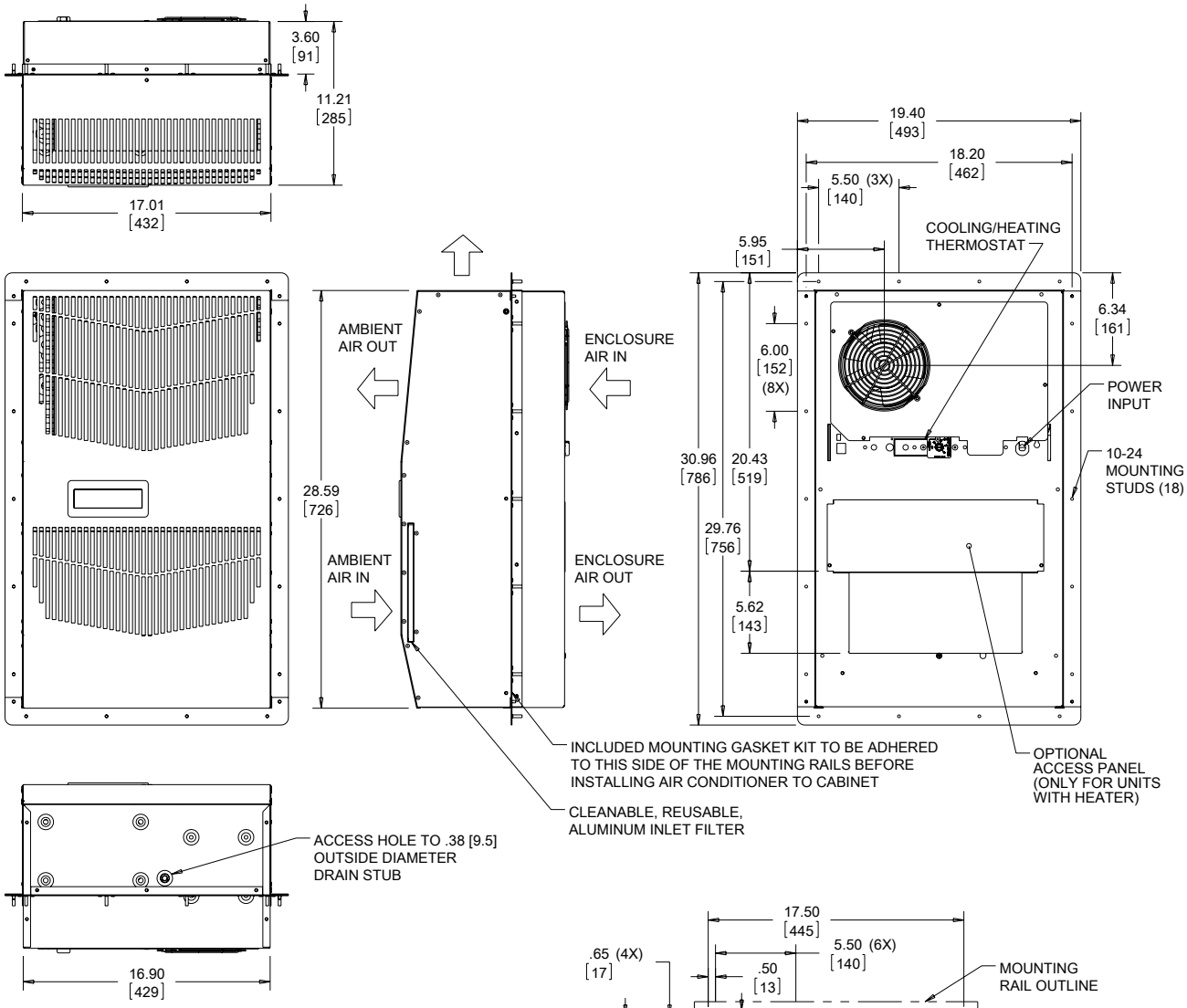

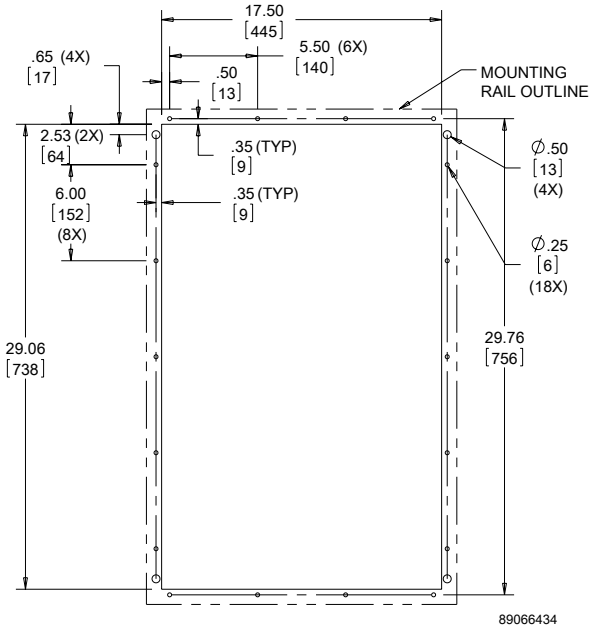

Cutout Dimensions

Visit www.nVent.com/HOFFMAN to download 2D and 3D CAD drawings into the overall design of your electrical system.

G28 Model 4000 BTU/Hr. 230/460 V, 6000 BTU/Hr. 115/230/460 V (1172/1758 Watt) Partial Recess

NOTE:
1. MOUNTING GASKET SUPPLIED (NOT SHOWN)
2. UNITS: in. [mm]

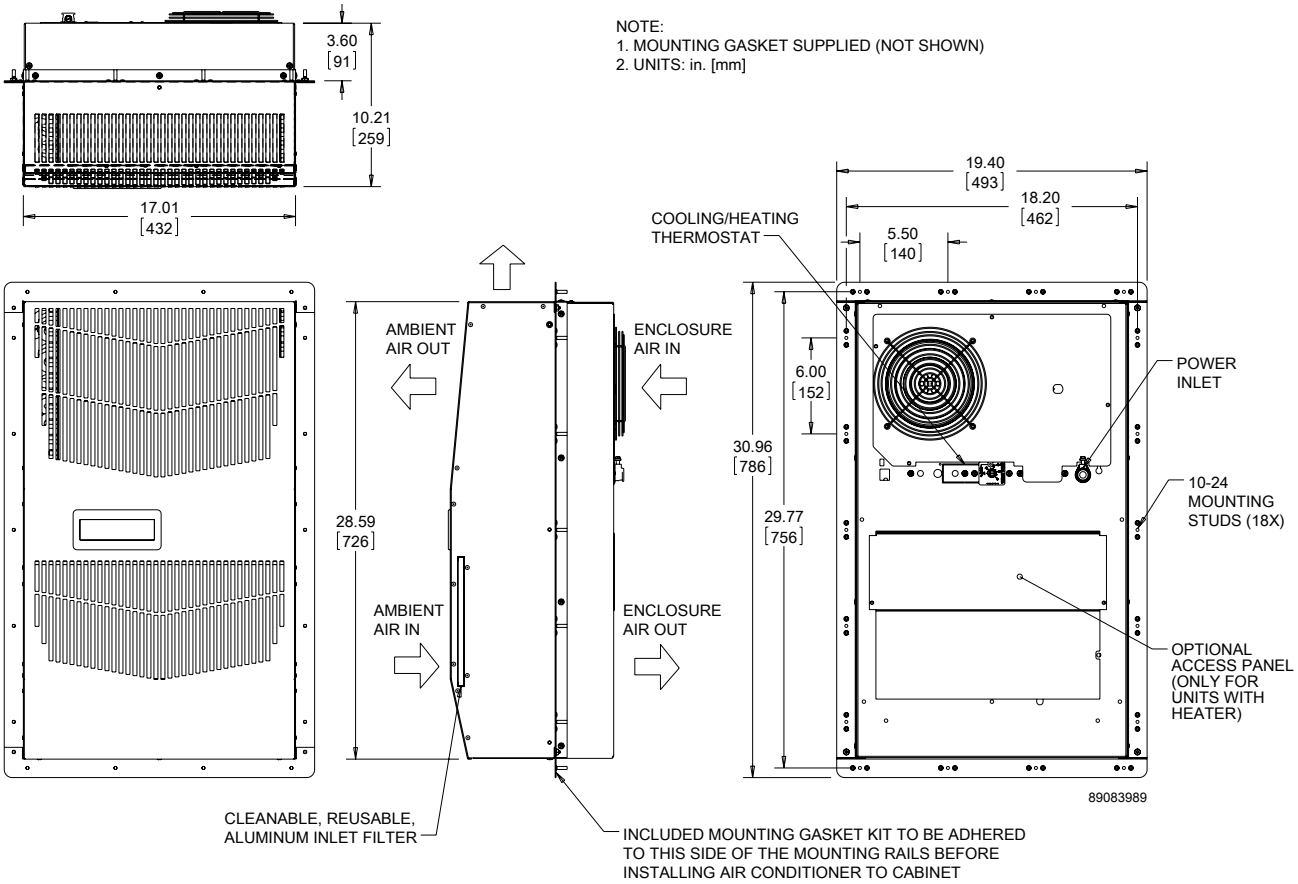

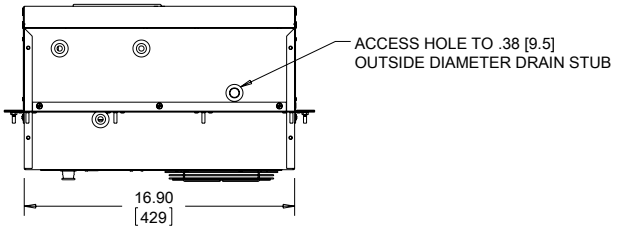

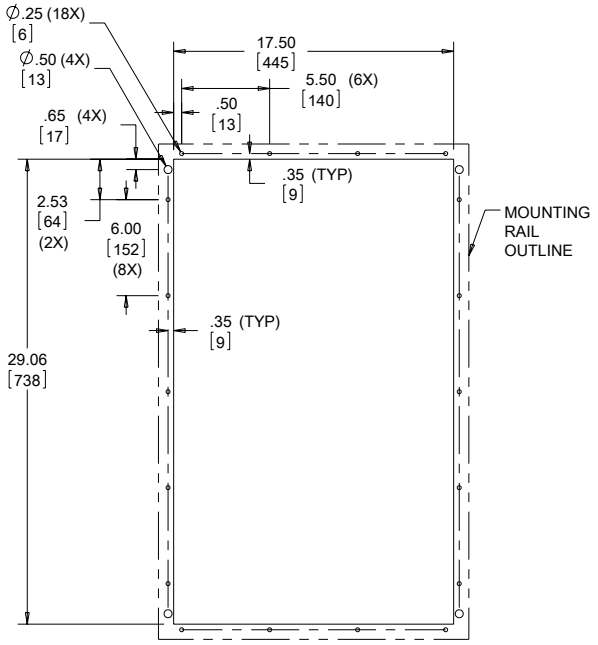

Cutout Dimensions

Visit www.nVent.com/HOFFMAN to download 2D and 3D CAD drawings into the overall design of your electrical system.

Performance Data **G52 Models 8000/12000 BTU/Hr. (2300/3500 Watt)**

CATALOG NUMBER						
Level 1 Painted Galvanized - G700	G520816G700	G520826G700	G520846G700	G521216G700	G521226G700	G521246G700
Level 1 Stainless Steel 316 - G102	G520816G102	G520826G102	G520846G102	G521216G102	G521226G102	G521246G102
Level 2 Painted Galvanized - G800	G520816G800	G520826G800	G520846G800	G521216G800	G521226G800	G521246G800
Level 2 Painted with Remote Access Control - G360*	G520816G360	G520826G360	G520846G360	G521216G360	G521226G360	G521246G360
Level 2 Stainless Steel 316 - G802	G520816G802	G520826G802	G520846G802	G521216G802	G521226G802	G521246G802
COOLING PERFORMANCE						
Nominal:**						
BTU/Hr.	**8000**	**8000**	**8000**	**12000**	**12000**	**12000**
Watts	**2344**	**2344**	**2344**	**3516**	**3516**	**3516**
At 131 F/131 F (55 C/55 C):						
BTU/Hr. (50/60 Hz)	7611/8363	7300/8200	7636/8314	12000/12500	10914/11679	10448/11853
Watts (50/60 Hz)	2231/2451	2139/2403	2239/2438	3516/3662	3201/3425	3064/3397
At 95 F/95 F (35 C/35 C):						
BTU/Hr. (50/60 Hz)	6134/6793	6000/6800	6716/7112	9900/10700	9219/9913	8660/9757
Watts (50/60 Hz)	1798/1991	1758/1992	1970/2086	2900/3135	2704/2907	2540/2861
Refrigerant	R134a	R134a	R134a	R134a	R134a	R134a
Refrigerant Charge (ounces/grams)	20/567	24/680	23/652	38/1077	36/1021	38/1077
Operating Temperature Range:						
Maximum (ºF/ºC)	131/55	131/55	131/55	131/55	131/55	131/55
Indoor Minimum (ºF/ºC)	50/10	50/10	50/10	50/10	50/10	50/10
Outdoor Minimum (ºF/ºC)	-40/-40	-40/-40	-40/-40	-40/-40	-40/-40	-40/-40
Airflow at 0 Static Pressure:						
Internal loop 50 Hz (CFM / m^3/hr.)	285/484	285/484	285/484	287/487	287/487	287/487
External loop 50 Hz (CFM / m^3/hr.)	650/1104	650/1104	650/1104	635/1078	635/1078	635/1078
Internal loop 60 Hz (CFM / m^3/hr.)	310/527	310/527	310/527	305/518	305/518	305/518
External loop 60 Hz (CFM / m^3/hr.)	700/1189	700/1189	700/1189	650/1104	650/1104	650/1104
ELECTRICAL DATA						
Rated Voltage	**115**	**230/208-230**	**400/460 3~**	**115**	**230/208-230**	**400/460 3~**
Frequency (Hz)	50/60	50/60	50/60	50/60	50/60	50/60
Operating Range	+/- 10%	+/- 10%	+/- 10%	+/- 10%	+/- 10%	+/- 10%
Max. Power Consumption (W)	1111/1332	1250/1415	1342/1724	2100/2427	1839/2297	1610/2005
Max. Nominal Current (A at 50/60 Hz)	9.9/11.4	5.7/7.1-6.3	2.4/2.8	16.3/21.2	8.0/10.9-10.2	3.2/3.5
Starting Current (A)	38	27	13	57	30	20
Agency Approvals	UL/cUL Listed CE EAC Others available upon request					
Power Input Description	Terminal Block					
ENCLOSURE PROTECTION						
UL Type	Type 12, 3R, 4 standard Type 4X Stainless steel optional					
International Rating	IP56 internal loop IP34 external loop					
CONTROLLER						
Description	Basic mechanical thermostat with digital display					
Thermostat Location	Enclosure side on all base models					
Digital Display Location:						
Indoor Models	Ambient side					
Outdoor Models	Enclosure side					
Factory Thermostat Setting (F/C)	80/27					
SOUND LEVEL						
At 1.5 Meters	68 dB(A)					
ACCESSORIES						
EASYSWAP Adaptor Plenum (GENESIS M52)	Enables SPECTRACOOL to be mounted to a GENESIS M52 air conditioner cutout Catalog Number PLM52G52					
UNIT DIMENSIONS						
Height (in./mm)	52.70/1339					
Width (in./mm)	17.14/435					
Depth (in./mm)	11.65/296					
Weight (lb./kg)	128/58.1	128/58.1	138/62.6	131/59.4	131/59.4	141/64.0

*Units with Remote Access Control utilize a digital controller and communicate via EtherNet/IP, Profinet, Modbus TCP/IP and SNMP over ethernet or modbus RTU over USB.

**Performance values are nominal. For actual values, see performance curves.

Performance Curves for G52 Models 8000 BTU/Hr. (23 Watt)

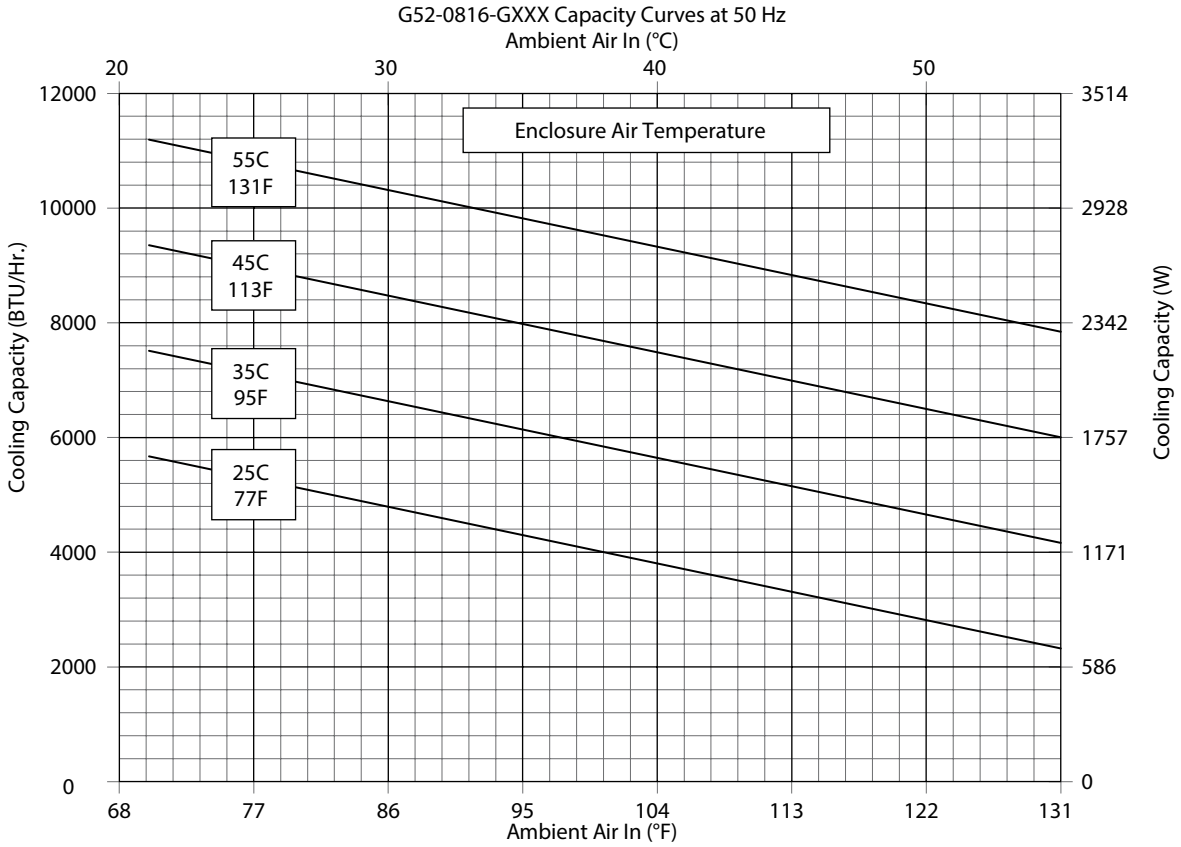

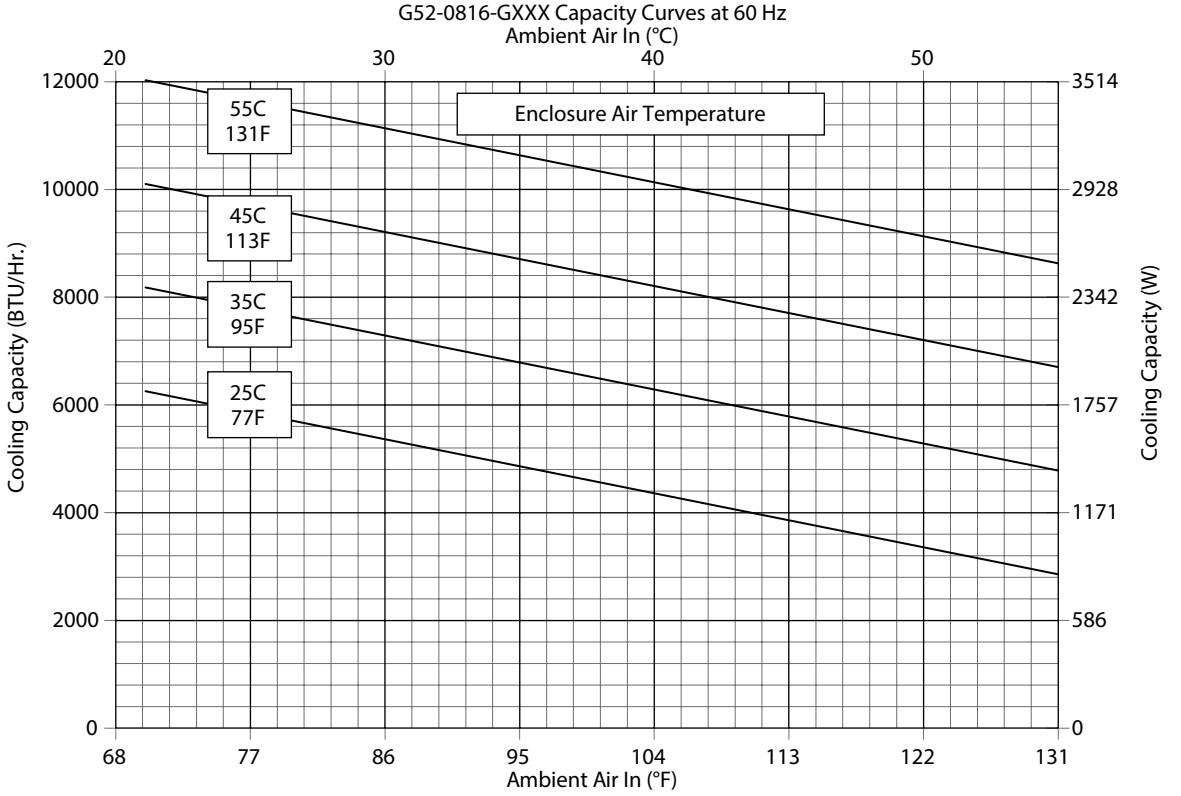

Performance Curves for G52 Models 8000 BTU/Hr. (23 Watt)

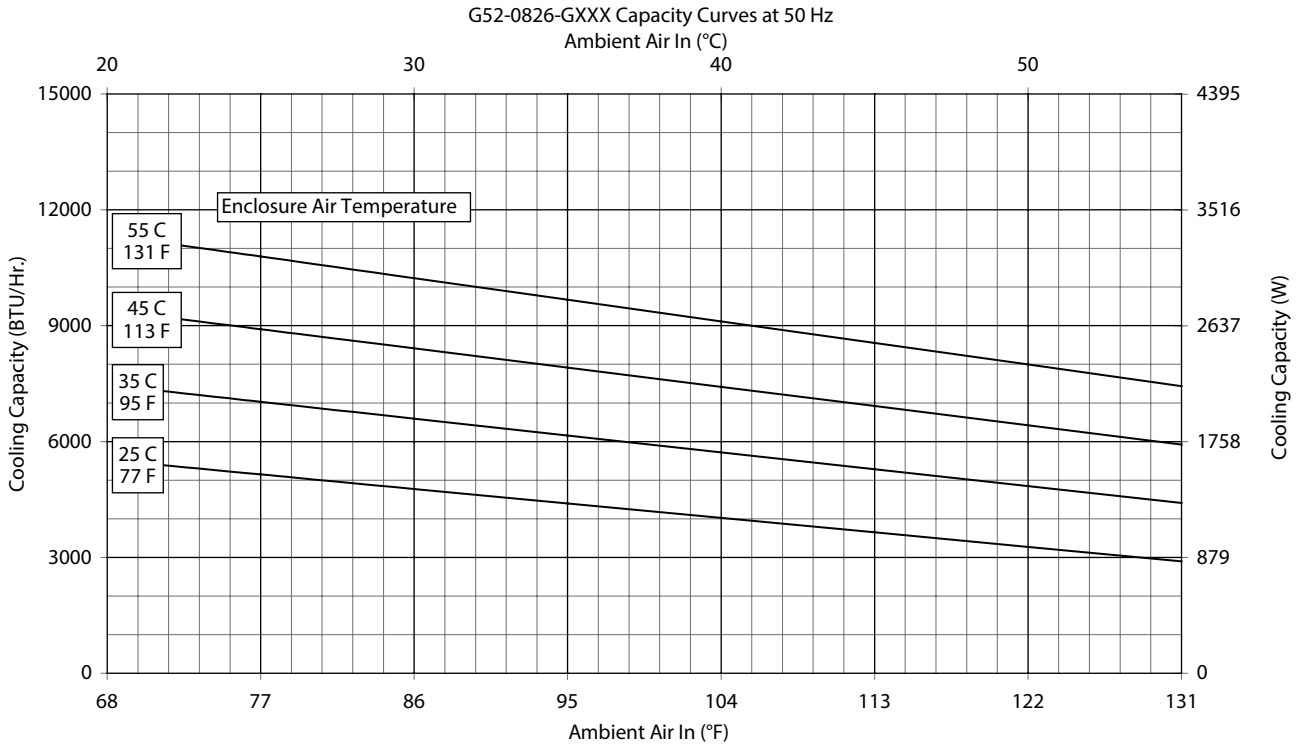

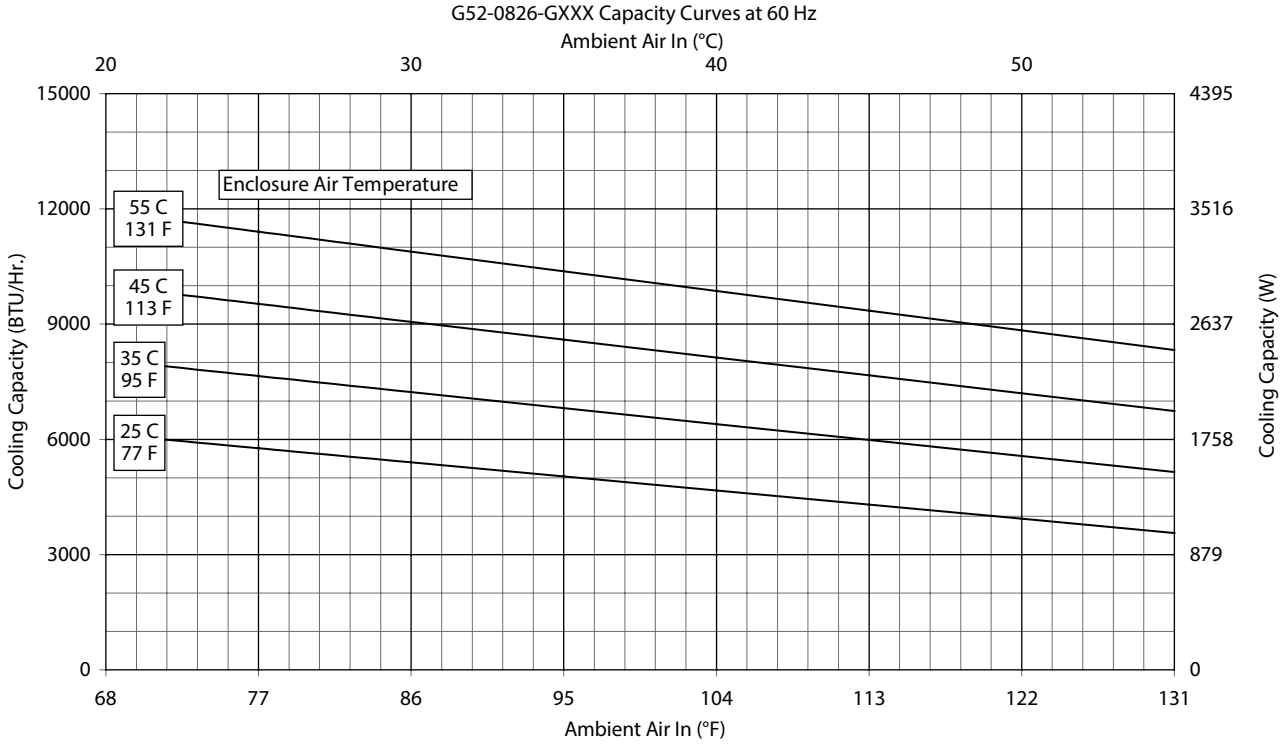

Performance Curves for G52 Models 8000 BTU/Hr. (2300 Watt)

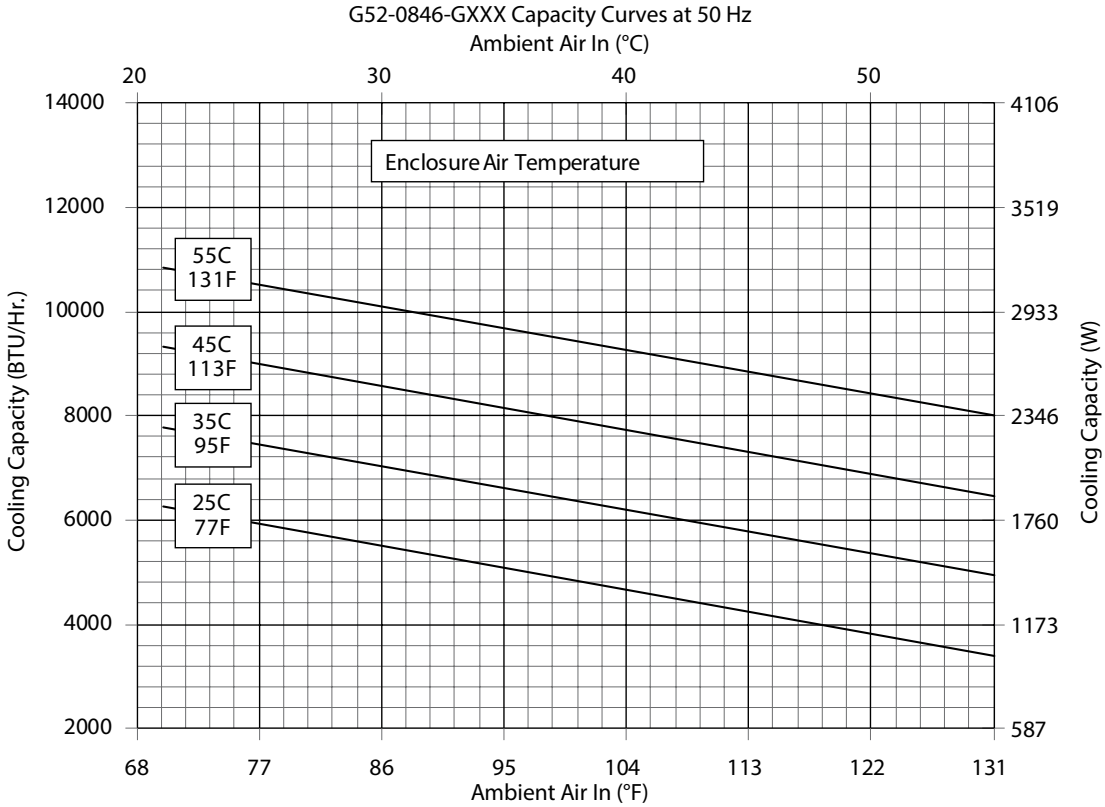

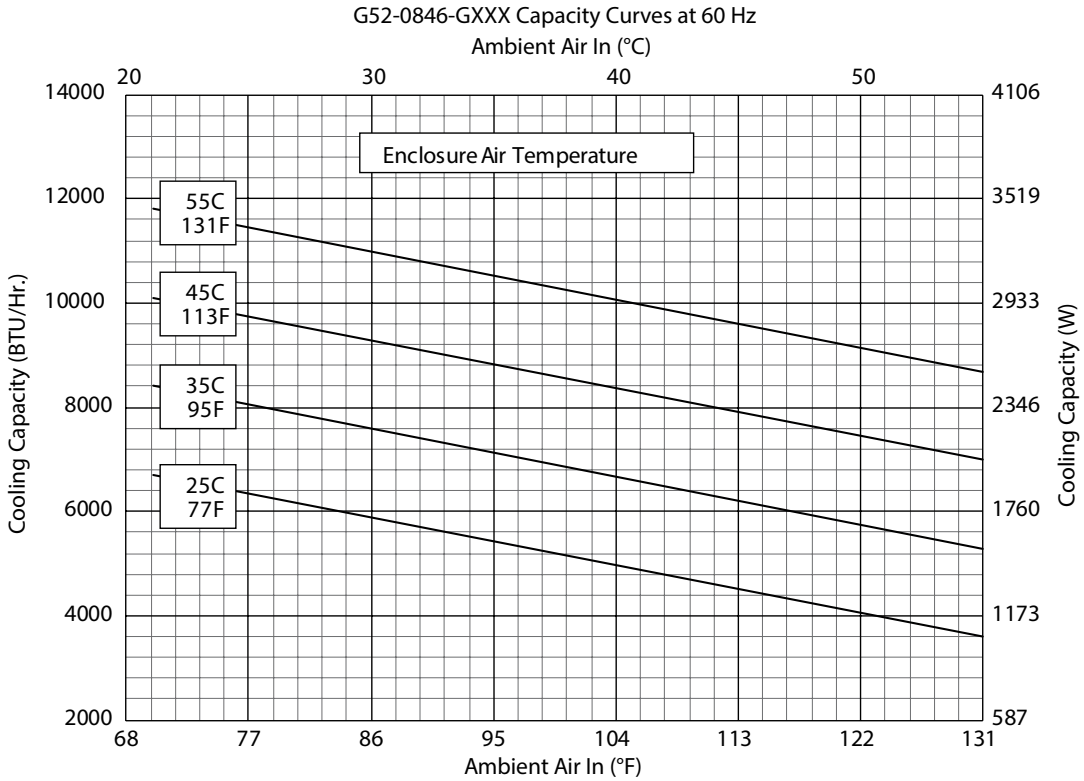

Performance Curves for G52 Models 12000 BTU/Hr. (3500 Watt)

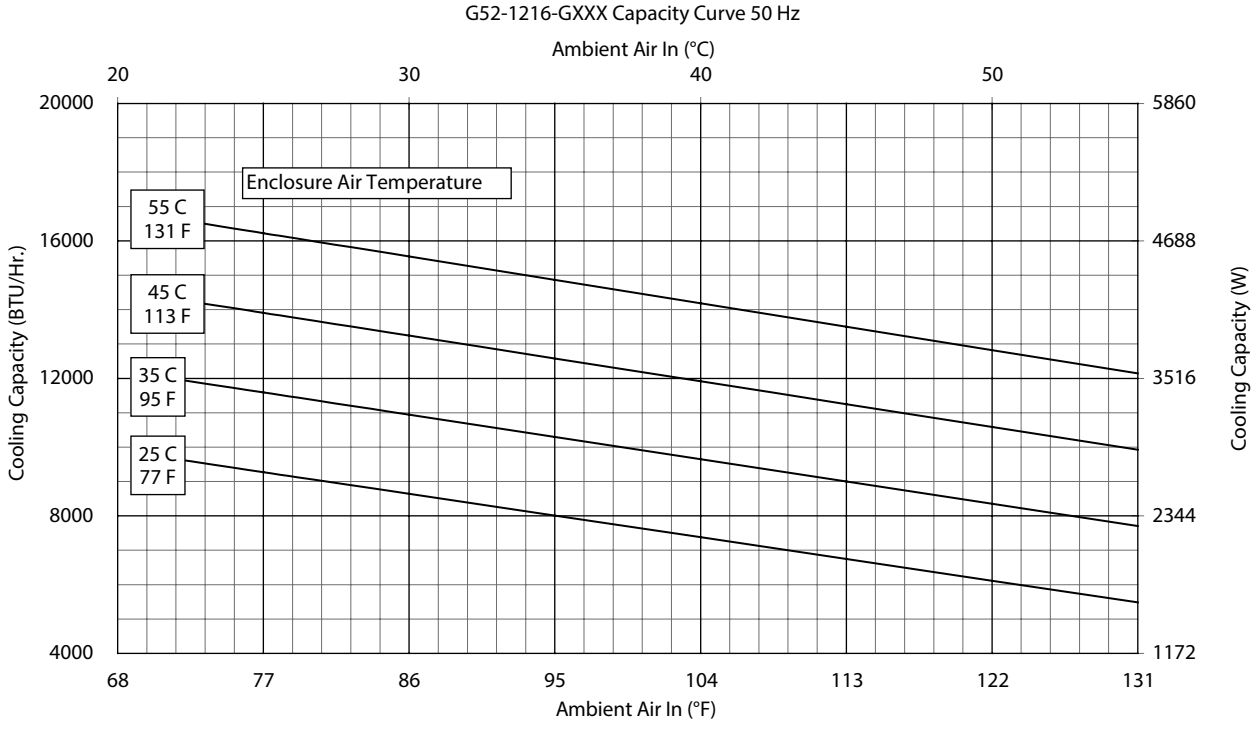

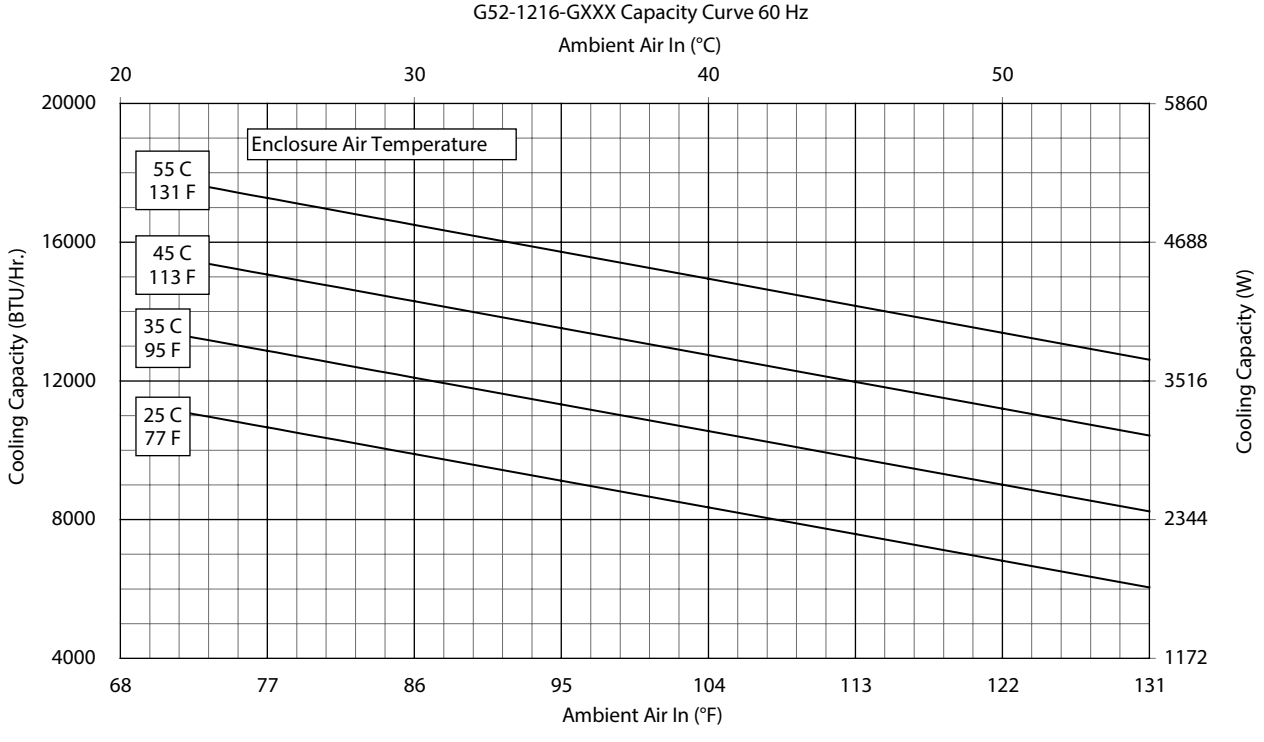

Performance Curves for G52 Models 12000 BTU/Hr. (3500 Watt)

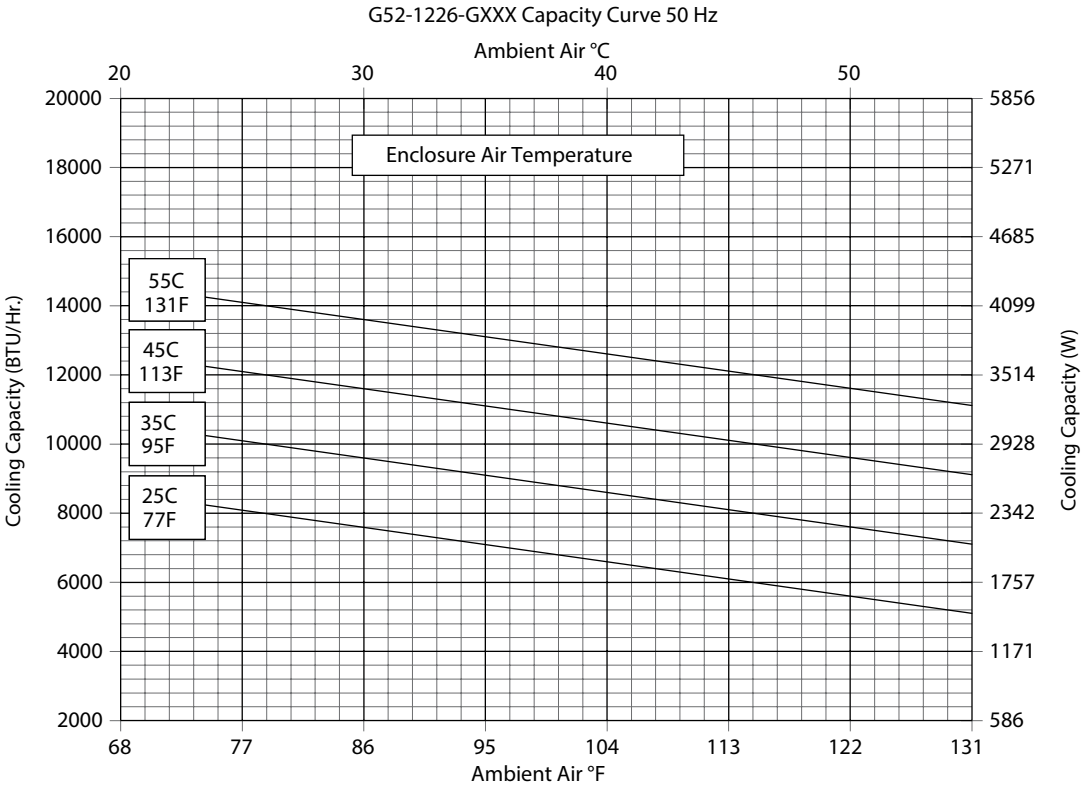

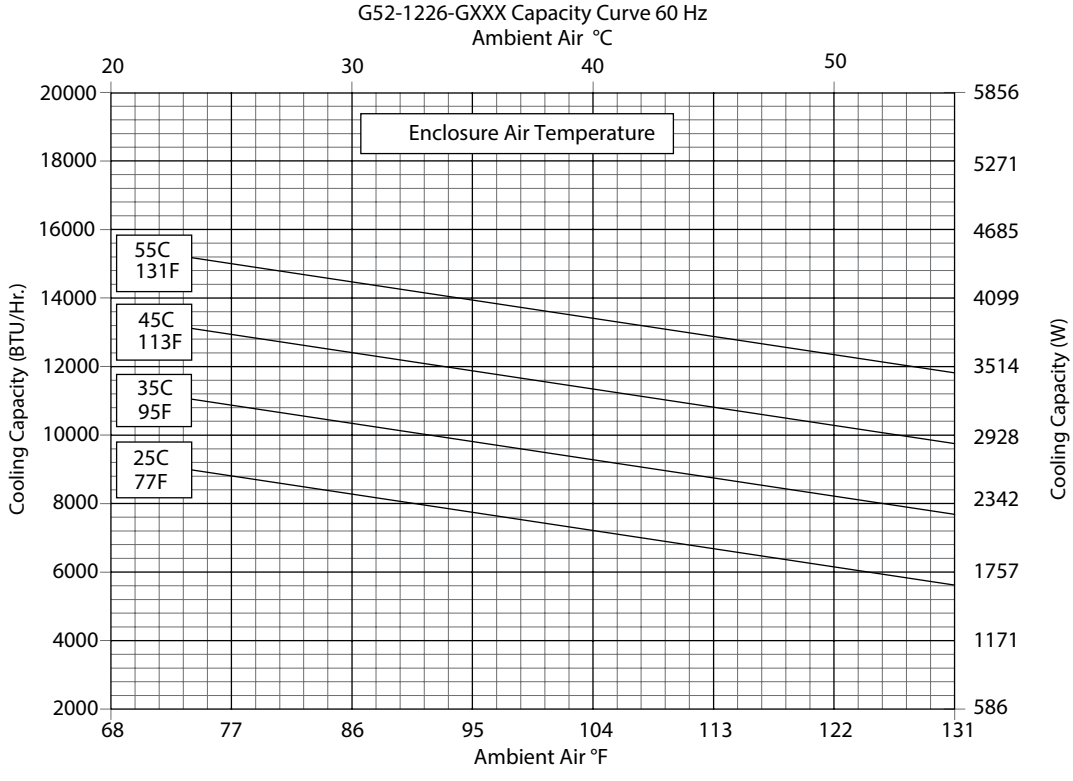

Performance Curves for G52 Models 12000 BTU/Hr. (3516 Watt)

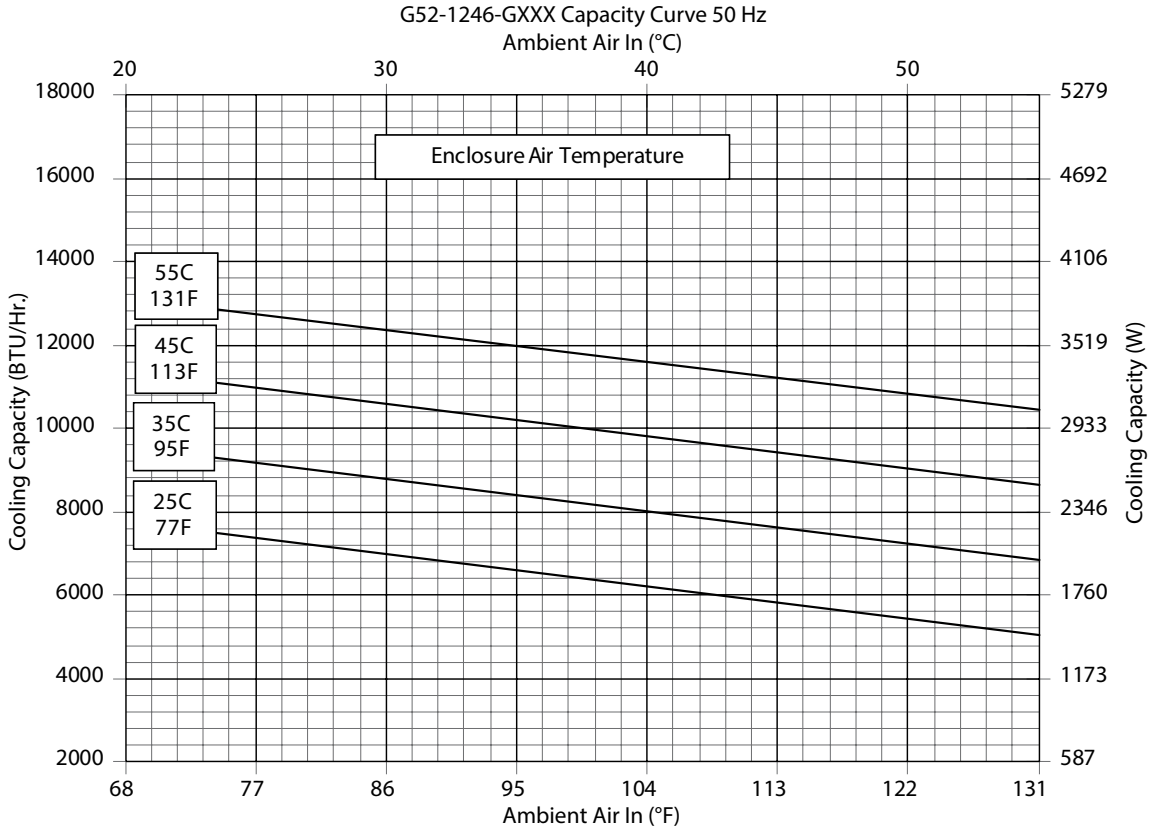

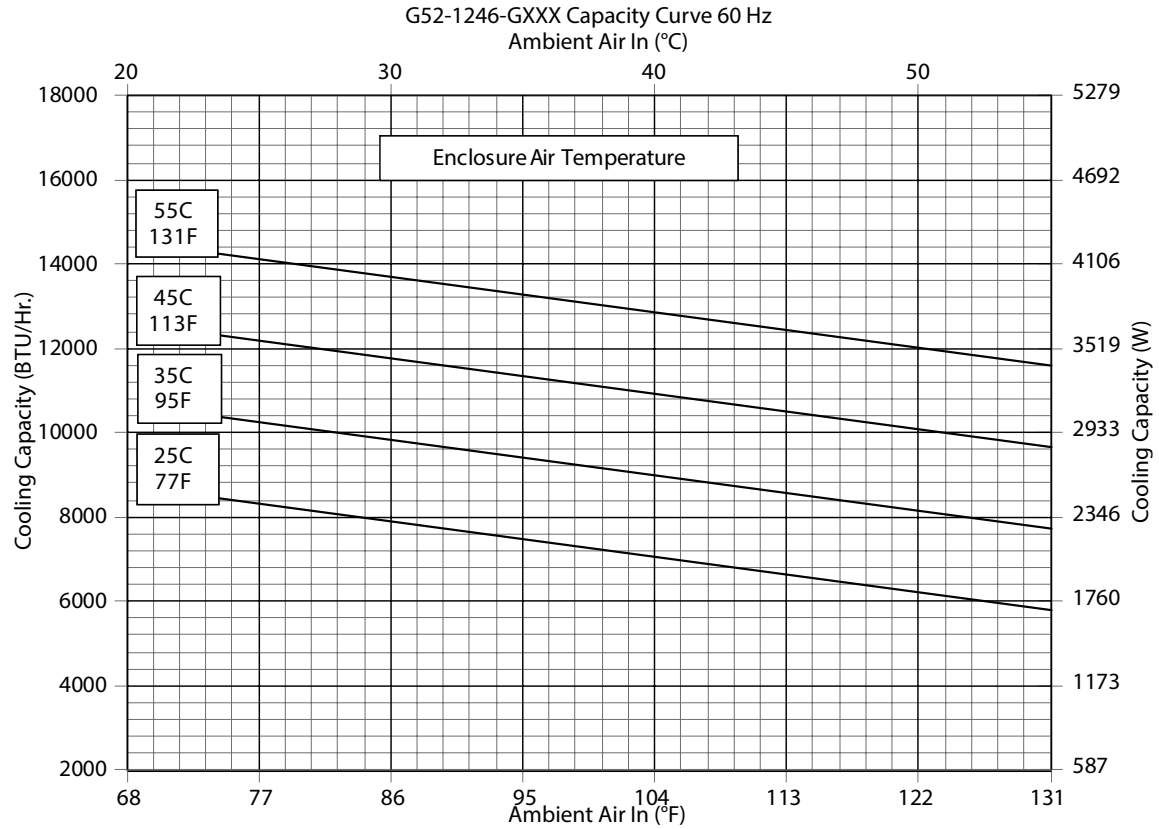

G52 Models 8000/12000 BTU/Hr. (2300/3500 Watt)

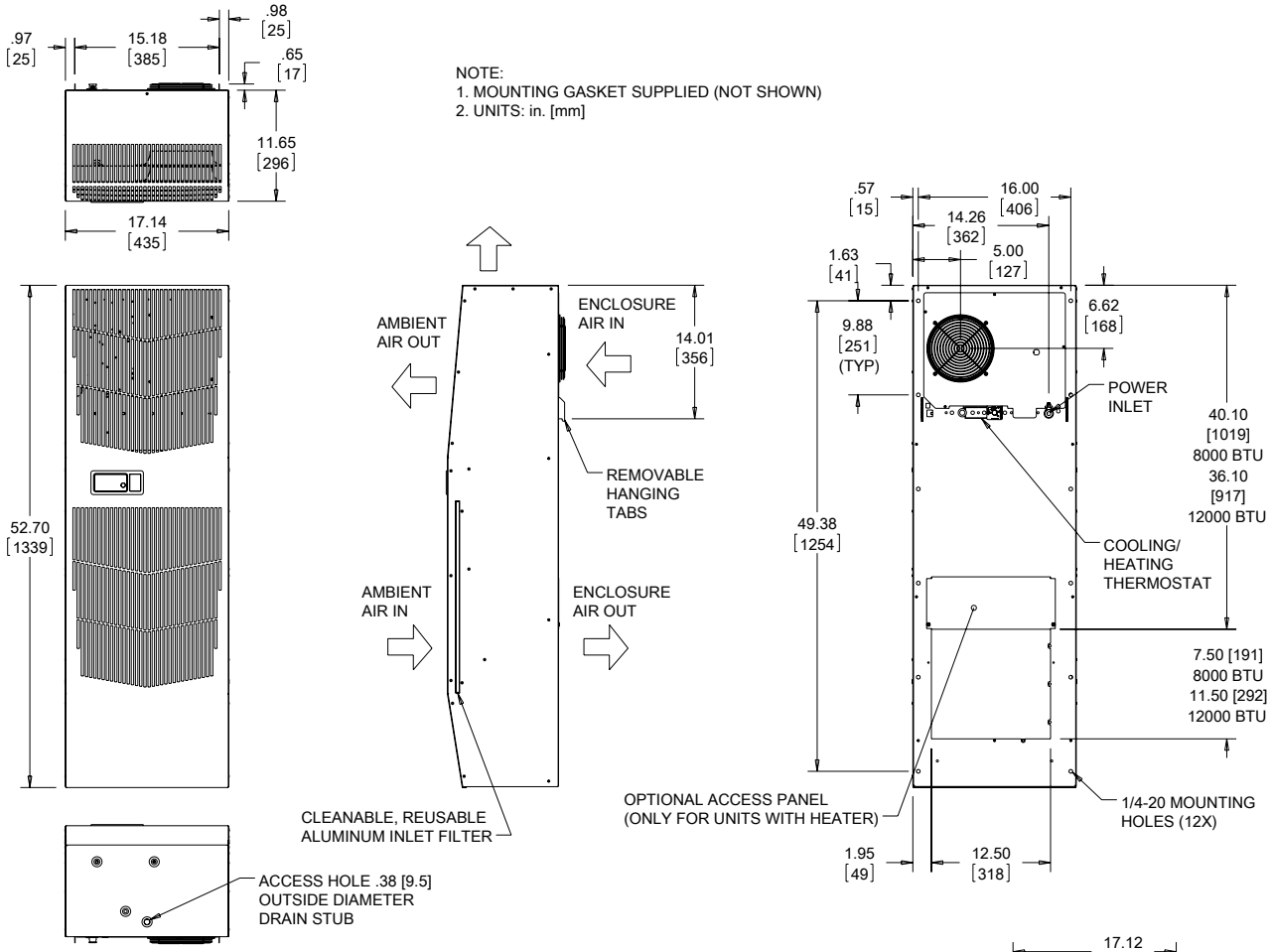

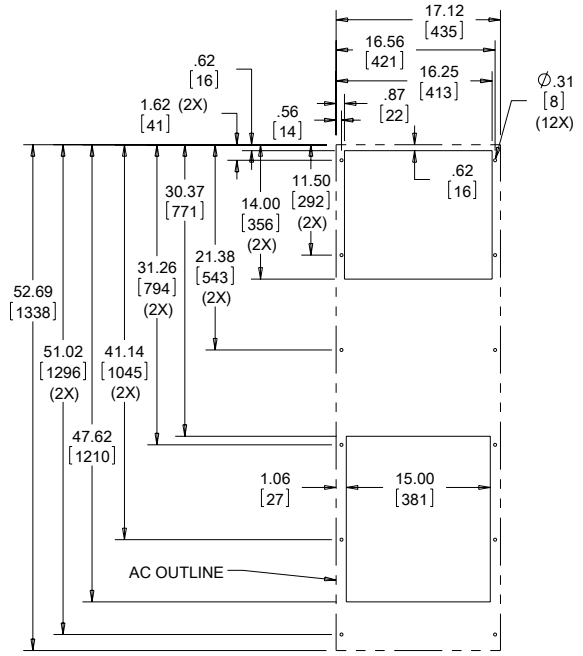

Cutout Dimensions
(Standard)

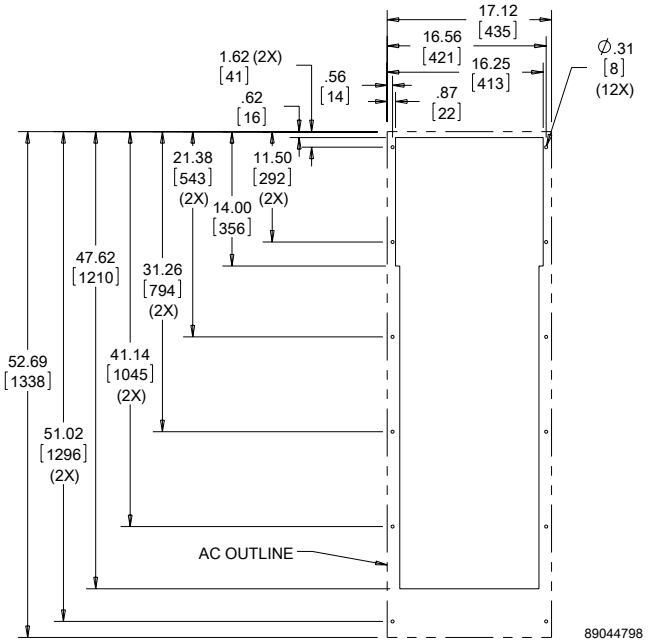

Cutout Dimensions
(G520846G150, G520846G151,
G521246G150, G521246G151 only)

Visit www.nVent.com/HOFFMAN to download 2D and 3D CAD drawings into the overall design of your electrical system.

G52 Models 8000/12000 BTU/Hr. (2344/3516 Watt) with Partial Recess

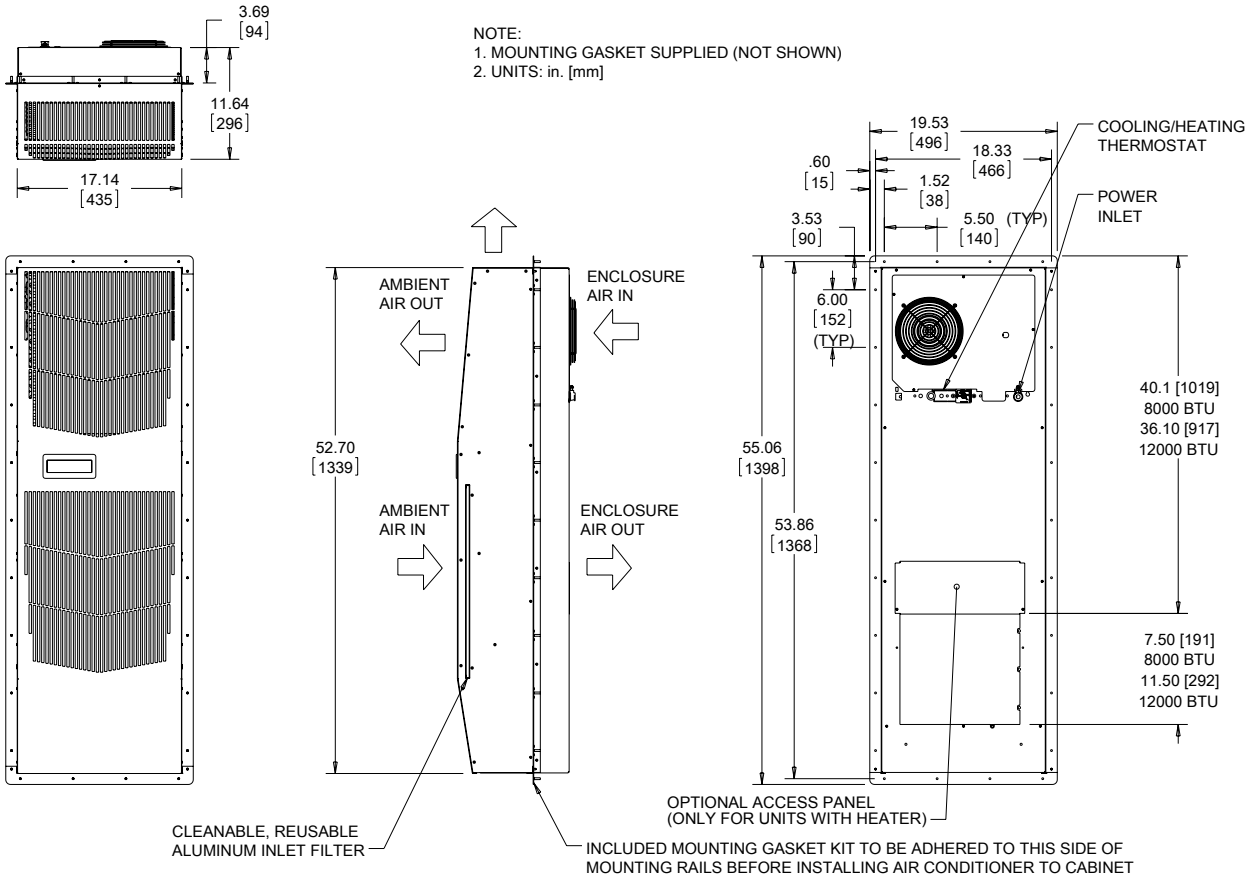

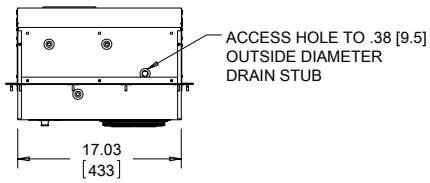

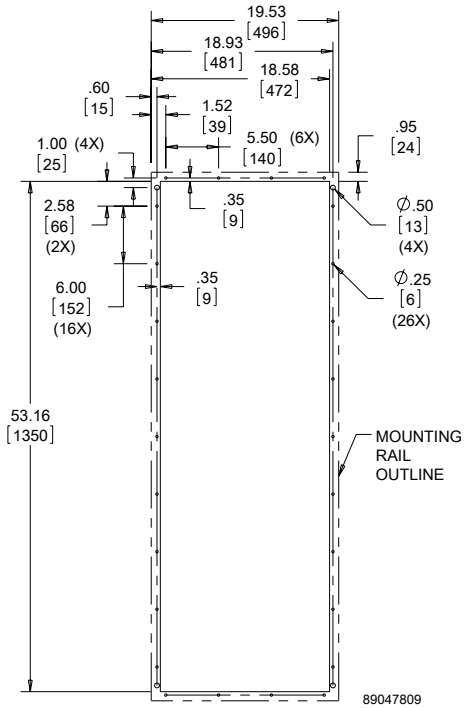

Cutout Dimensions

Visit www.nVent.com/HOFFMAN to download 2D and 3D CAD drawings into the overall design of your electrical system.

Performance Data **G57 Models 20000 BTU/Hr. (5861 Watt)**

CATALOG NUMBER		
Level 1 Painted Galvanized - G700	G572026G700	G572046G700
Level 1 Stainless Steel 316 - G102	G572026G102	G572046G102
Level 2 Painted Galvanized - G800	G572026G800	G572046G800
Level 2 Painted with Remote Access Control - G360*	G572026G360	G572046G360
Level 2 Stainless Steel 316 - G802	G572026G802	G572046G802
COOLING PERFORMANCE		
Nominal:**		
BTU/Hr.	**20000**	**20000**
Watts	**5861**	**5861**
At 131 F/131 F (55 C/55 C):		
BTU/Hr. (50/60 Hz)	17500/19600	21400/23400
W (50/60 Hz)	5129/5744	6272/6857
At 95 F/95 F (35 C/35 C):		
BTU/Hr. (50/60 Hz)	16000/18000	19300/21400
W (50/60 Hz)	4689/5275	5656/6272
Refrigerant	R407c	R407c
Refrigerant Charge (ounces/grams)	50/1417	48/1361
Operating Temperature Range:		
Maximum (°F/°C)	131/55	131/55
Indoor Minimum (°F/°C)	50/10	50/10
Outdoor Minimum (°F/°C)	-40/-40	-40/-40
Airflow at 0 Static Pressure:		
Internal loop 50 Hz (CFM / m^3/hr.)	513/872	513/872
External loop 50 Hz (CFM / m^3/hr.)	919/1562	919/1562
Internal loop 60 Hz (CFM / m^3/hr.)	587/998	587/998
External loop 60 Hz (CFM / m^3/hr.)	1055/1794	1055/1794
ELECTRICAL DATA		
Rated Voltage	**230/230**	**400/460 3~**
Frequency (Hz)	50/60	50/60
Operating Range	+/- 10%	+/- 10%
Max. Power Consuption (W at 50/60 Hz)	4508/5106	4017/5043
Max. Nominal Current (A at 50/60 Hz)	16.7/22.3	6.0/6.8
Starting Current (A)	63	27
Agency Approvals	UL/cUL Listed CE EAC Others available upon request	
Power Input Description	Terminal Block	
ENCLOSURE PROTECTION		
UL Type	Type 12, 3R, 4 standard Type 4X stainless steel optional	
International Rating	IP56 internal loop IP34 external loop	
CONTROLLER		
Description	Basic mechanical thermostat with digital display	
Thermostat Location	Enclosure side on all base models	
Digital Display Location:		
Indoor Models	Ambient side	
Outdoor Models	Enclosure side	
Factory Thermostat Setting (°F/°C)	80/27	
SOUND LEVEL		
At 1.5 Meters	74.1 dB(A)	
ACCESSORIES		
EASYSWAP Adaptor Plenum (T-Series T53)	Enables SPECTRACOOL to be mounted to a T-Series T53 air conditioner cutout part #57721601SP	
UNIT DIMENSIONS		
Height (in./mm)	57.70/1465	
Width (in./mm)	20.89/531	
Depth (in./mm)	15.36/390	
Weight (lb./kg)	197/89	

*Units with Remote Access Control utilize a digital controller and communicate via EtherNet/IP, Profinet, Modbus TCP/IP and SNMP over ethernet or modbus RTU over USB.

**Performance values are nominal. For actual values, see performance curves.

Performance Curves for G57 Models 20000 BTU/Hr.

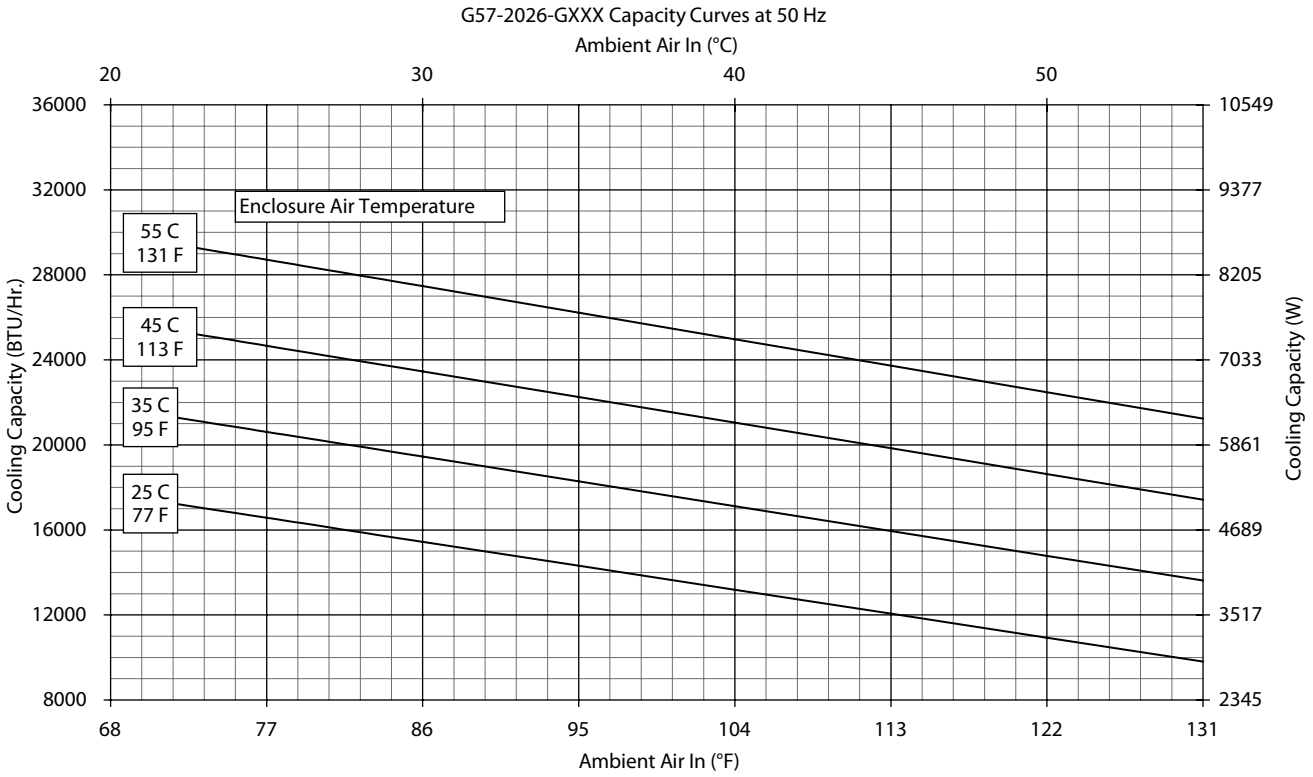

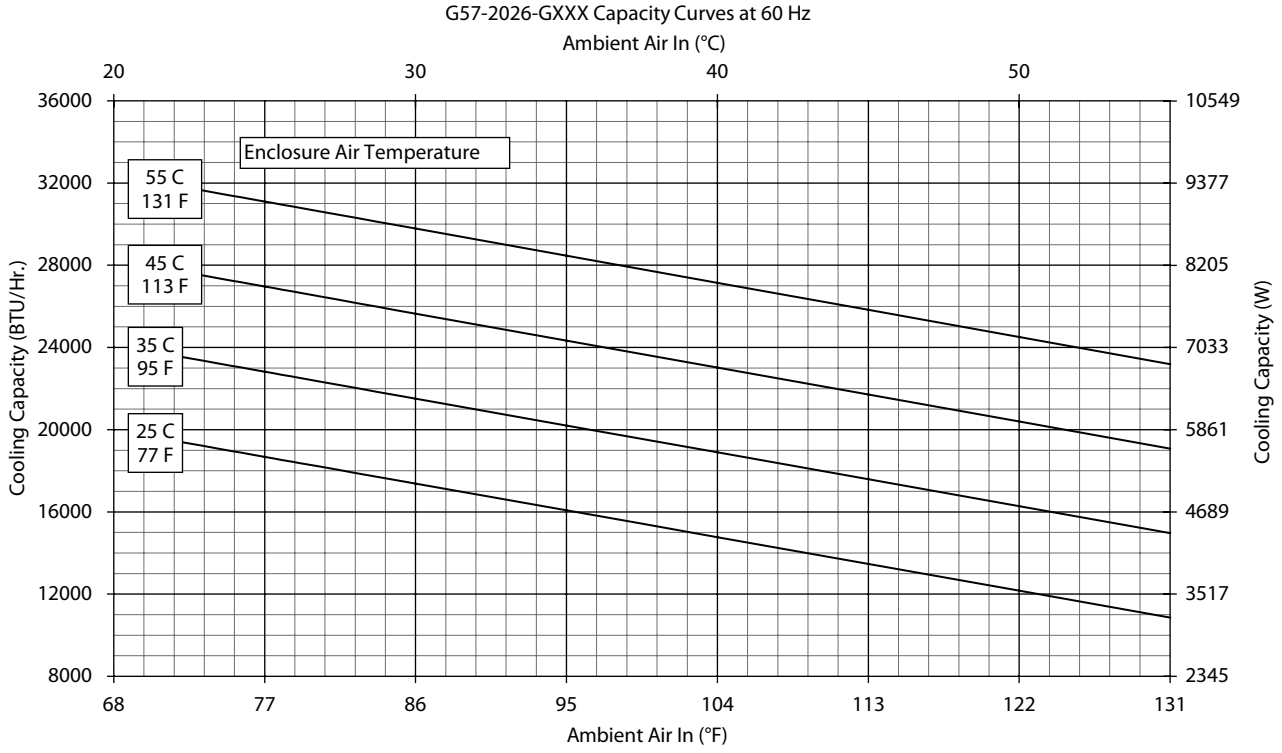

Performance Curves for G57 Models 20000 BTU/Hr.

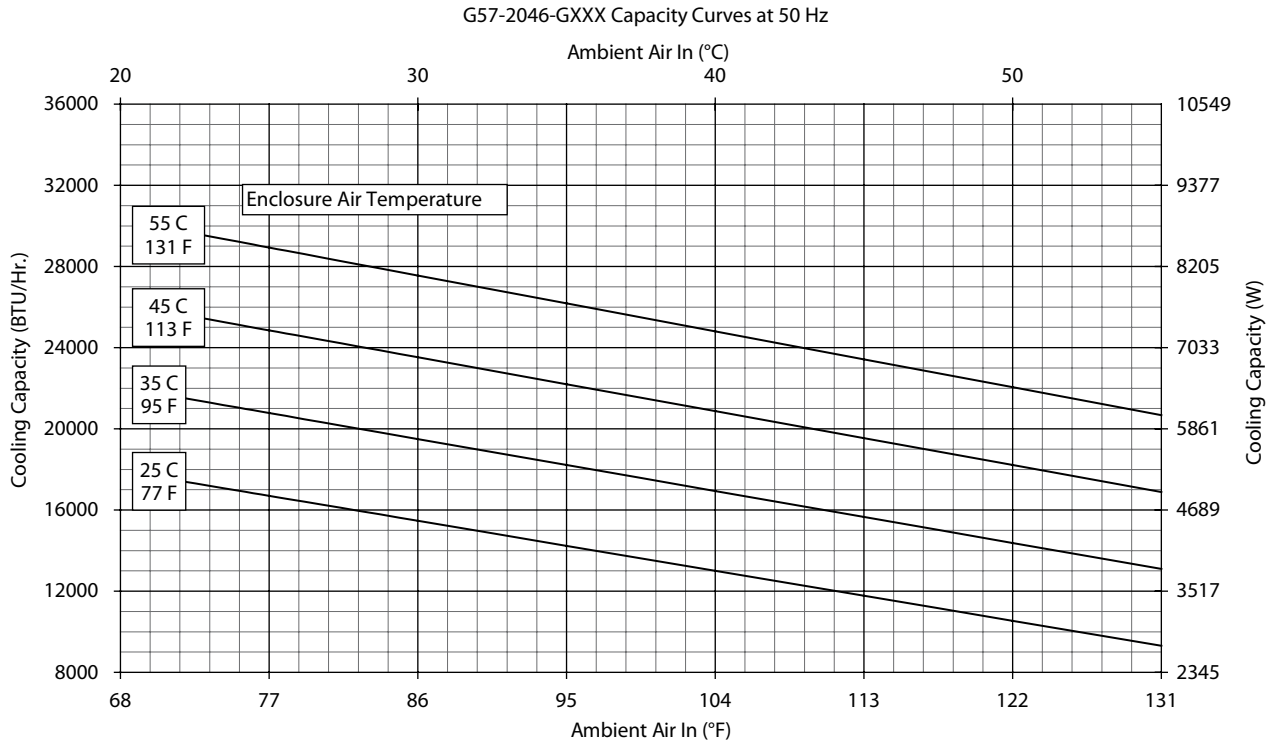

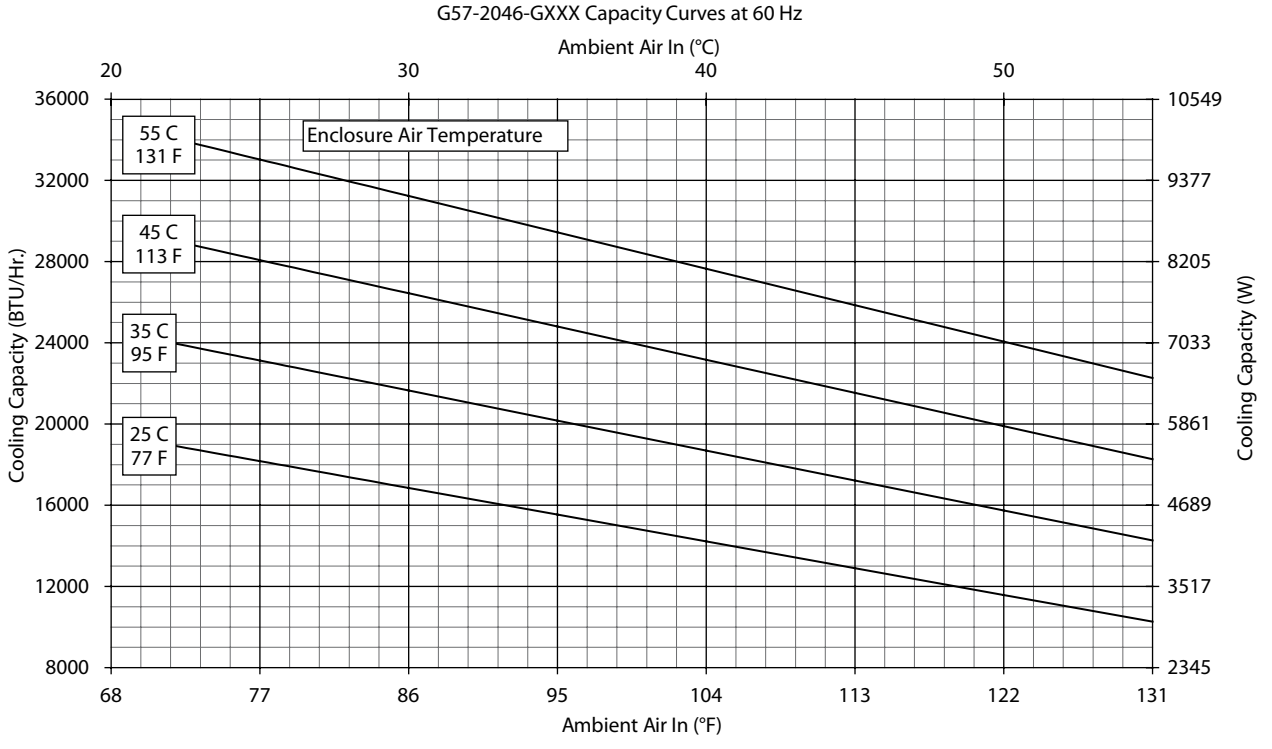

G57 Models 20000 BTU/Hr. (5861 Watt)

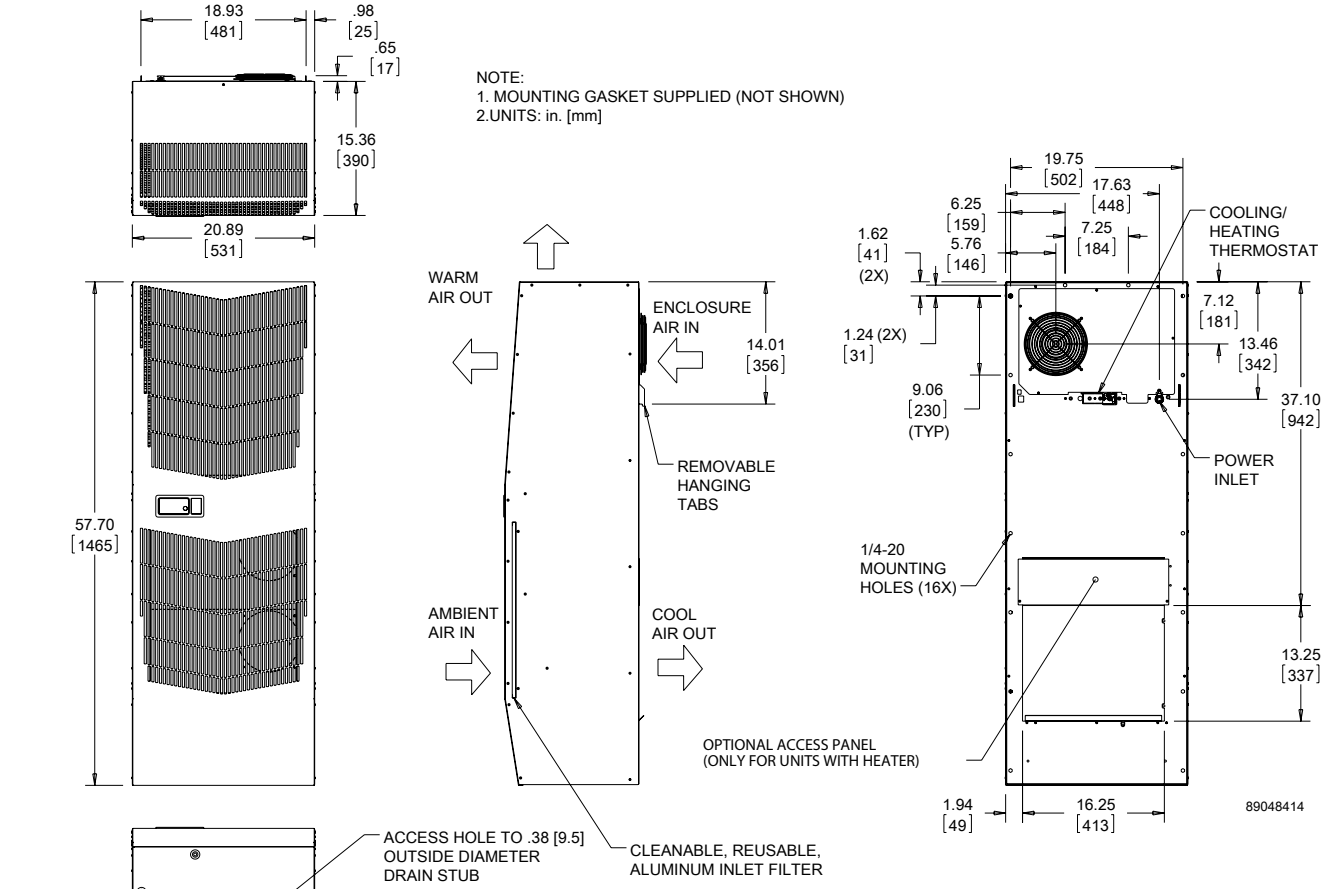

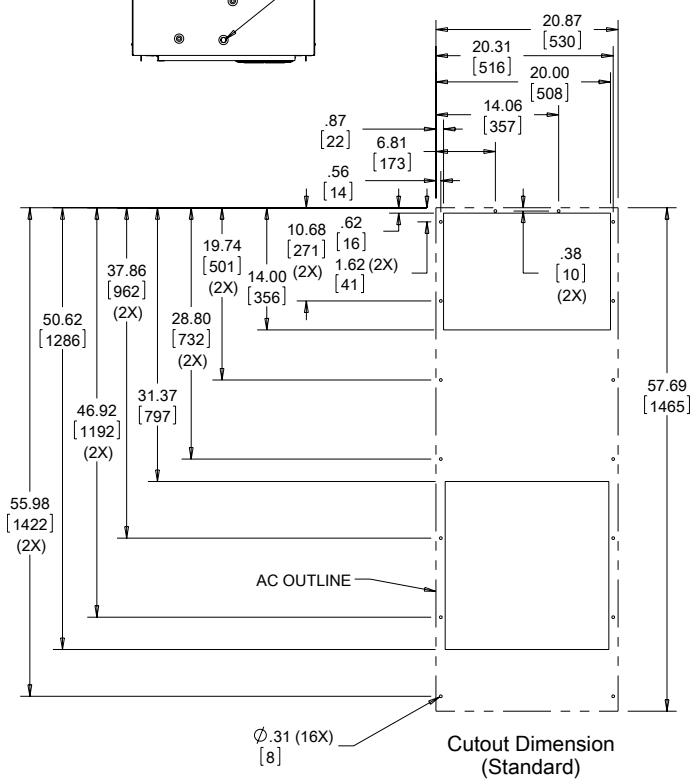

Cutout Dimension (Standard)

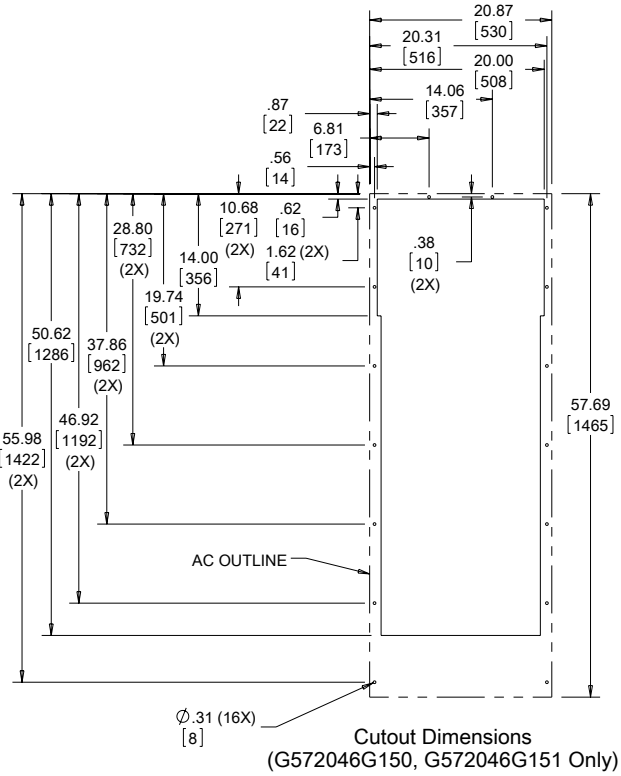

Cutout Dimensions (G572046G150, G572046G151 Only)

Visit www.nVent.com/HOFFMAN to download 2D and 3D CAD drawings into the overall design of your electrical system.

G57 Models 20000 BTU/Hr. (5861 Watt) With Partial Recess

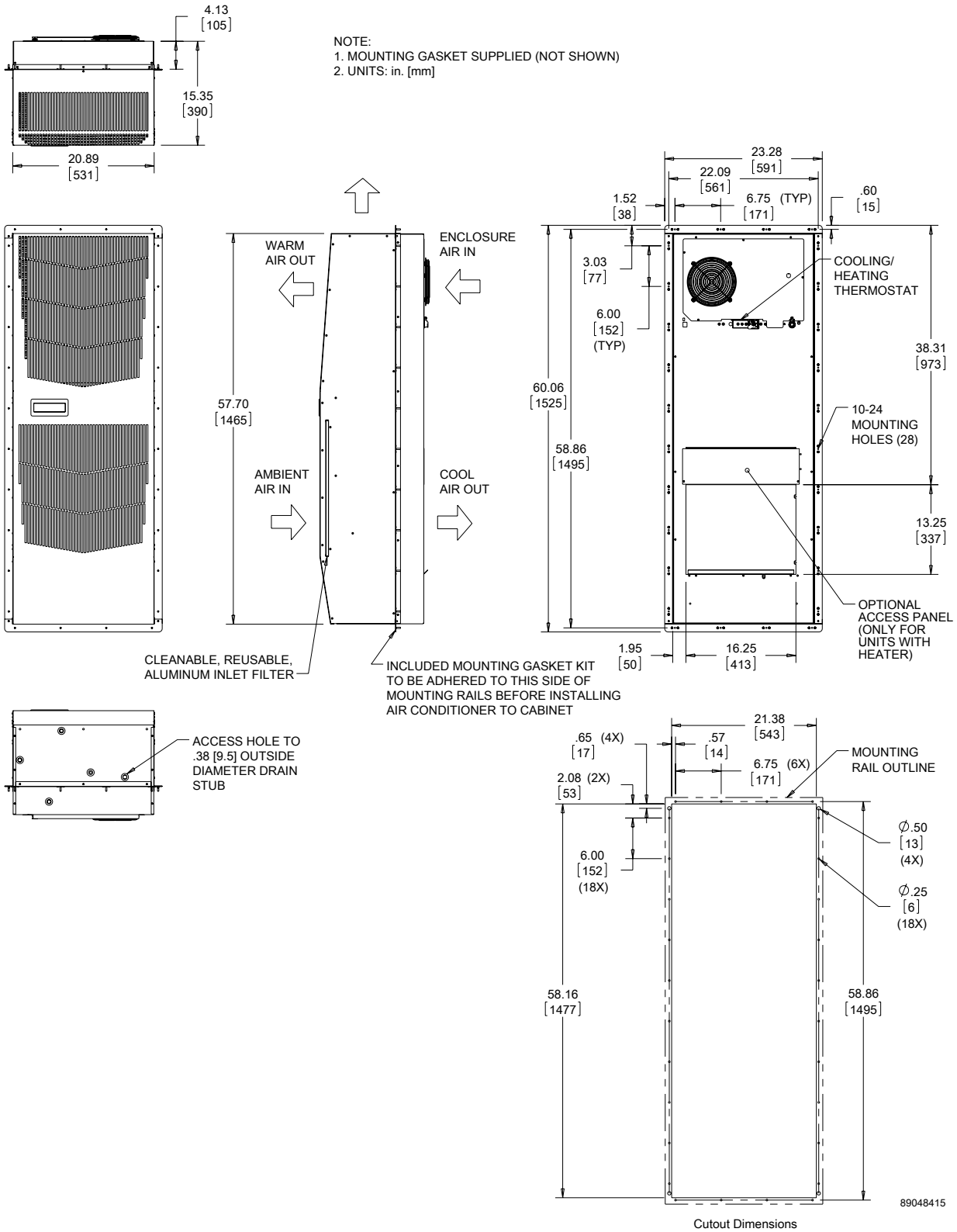

Cutout Dimensions

Visit www.nVent.com/HOFFMAN to download 2D and 3D CAD drawings into the overall design of your electrical system.