SPECTRACOOL™

Plenum Adaptor, G57

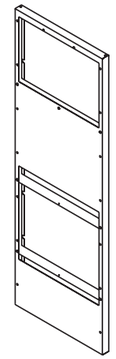

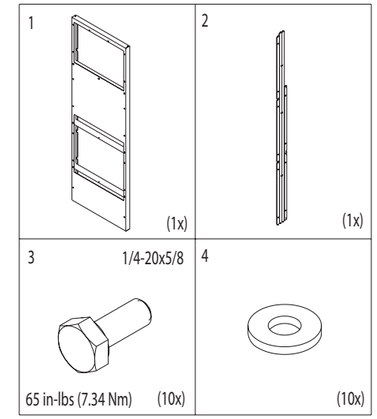

nVent
2100 Hoffman Way
Anoka, MN 55303 USA
☎ +1.763.422.2211
+1.763.576.3200

nVent.com

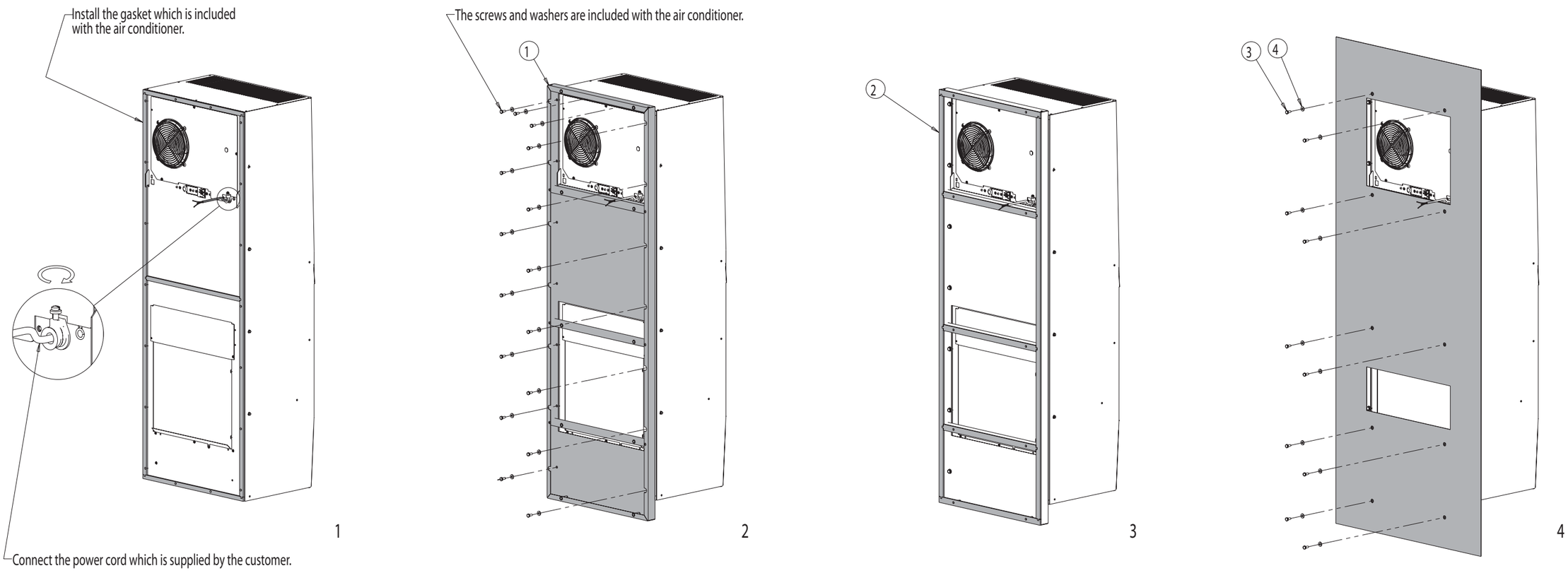

For warranty information, please reference the following web address:
https://hoffman.nvent.com/en/hoffman/warranty-information

© 2018 nVent

P/N 89091638

89093199