PROLINE®

Solid Top
Feste Oberseite
Plein Dessus
Sólida Tapa

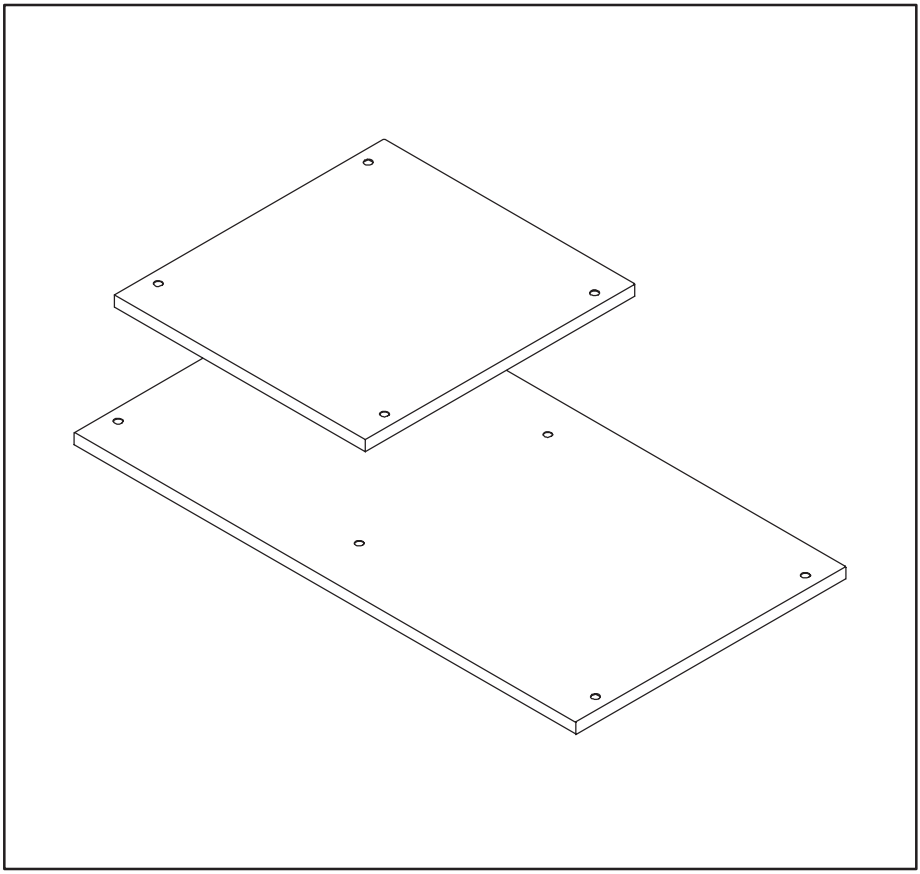

© 2018 Hoffman Enclosures Inc.
PH 763 422 2211 • nVent.com/HOFFMAN
P/N 11359725 87567374

1 M12–1.75x16	2
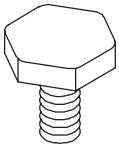	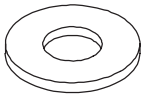
(4x) (6x)	(4x) (6x)

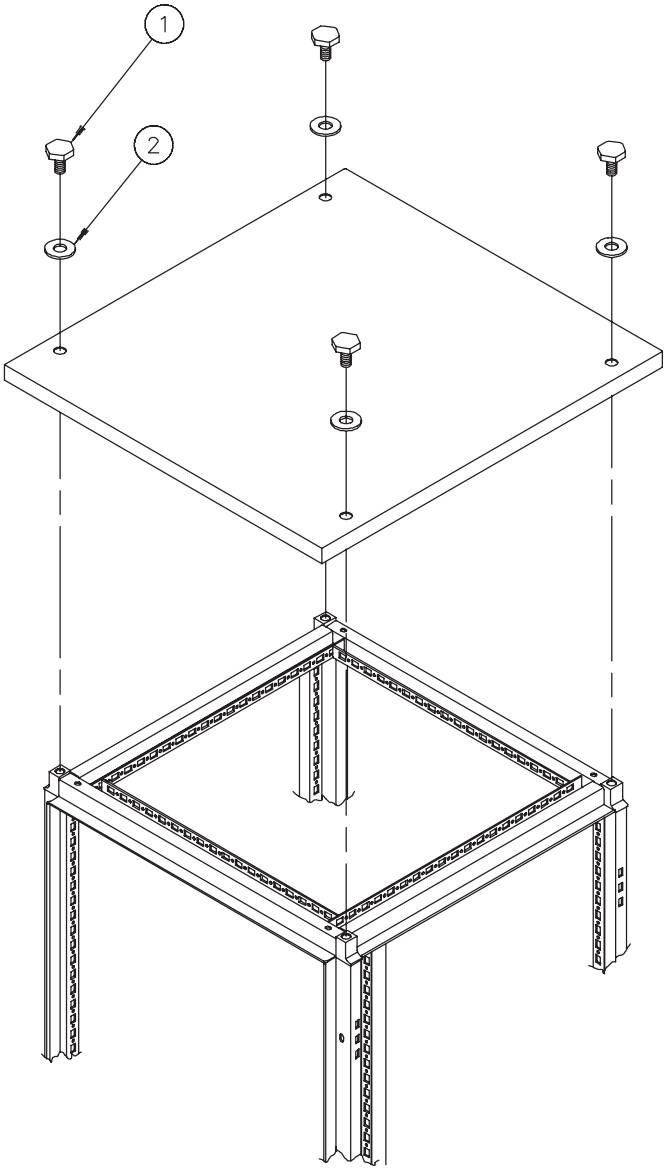

© 2018 Hoffman Enclosures Inc.

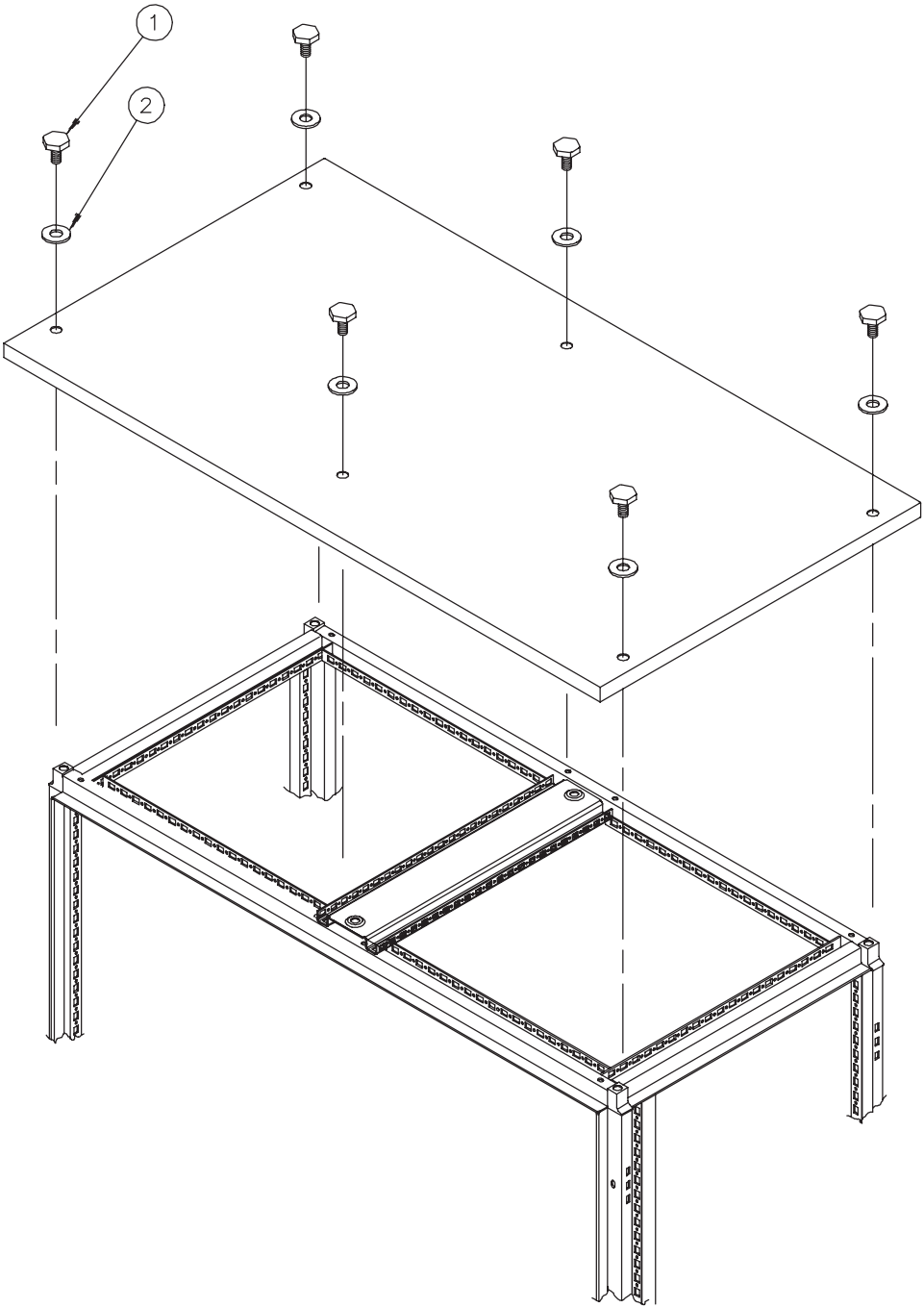

© 2018 Hoffman Enclosures Inc.

© 2018 Hoffman Enclosures Inc.
PH 763 422 2211 • nVent.com/HOFFMAN
P/N 11359725 87567374