SOLID TOP

APPLICATION

ProLine G2 Solid tops are used to close the top opening on an enclosure frame.

FEATURES

- Lifting eyes can be used to attach the solid top, in place of the included hardware
- Seamless polyurethane gasket (UL component recognized) provides a watertight, dust-tight seal against moisture and contaminants

SPECIFICATIONS

- 16 gauge (1.5 mm) steel
- Additional support provisions need to be made to support top-mount air conditioners or other top-mount accessories
- Includes four M12 hex bolts for installation

EMC Solid Tops – Additional Specifications:

- Plated to provide corrosion resistance while maintaining a metal-to-metal contact with the metal fiber gasket
- Metalized non-woven fabric EMI/RFI material covering UL94HP rated urethane foam gasket
- Plating exposed in interior and paint over plated exterior
- Longer lead times required for EMC items

FINISH

- Polyester powder paint; RAL 7035 textured light gray standard
- Custom colors available

ACCESSORIES

- Lifting Eyes
- Lifting Bars
- Lifting Angles
- Support Bracket Kit

BULLETIN: P40

Standard Product

Catalog Number	W (mm)	W (in.)	D (mm)	D (in.)	Gauge	Fits Frame WxD (mm)
P2T45	379	14.9	459	18.1	16	400x500
P2T46	379	14.9	559	22.0	16	400x600
P2T64	579	22.8	359	14.1	16	600x400
P2T65	579	22.8	459	18.1	16	600x500
P2T66	579	22.8	559	22.0	16	600x600
P2T66HF	579	22.8	559	22.0	16	600x600
P2T68	579	22.8	759	29.9	16	600x800
P2T84	779	30.7	359	14.1	16	800x400
P2T85	779	30.7	459	18.1	16	800x500
P2T86	779	30.7	559	22.0	16	800x600
P2T86HF	779	30.7	559	22.0	16	800x600
P2T88	779	30.7	759	29.9	16	800x800
P2T810	779	30.7	959	37.8	16	800x1000
P2T104	979	38.5	359	14.1	16	1000x400
P2T105	979	38.5	459	18.1	16	1000x500
P2T106	979	38.5	559	22.0	16	1000x600
P2T106HF	979	38.5	559	22.0	16	1000x600
P2T108	979	38.5	759	29.9	16	1000x800
P2T124	1179	46.4	359	14.1	16	1200x400
P2T125	1179	46.4	459	18.1	16	1200x500
P2T126	1179	46.4	559	22.0	16	1200x600
P2T128	1179	46.4	759	29.9	16	1200x800
P2T164	1579	62.2	359	14.1	16	1600x400
P2T165	1579	62.2	459	18.1	16	1600x500
P2T166	1579	62.2	559	22.0	16	1600x600
P2T168	1579	62.2	759	29.9	16	1600x800
P2T185	1779	70.0	459	18.1	16	1800x500
P2T186	1779	70.0	559	22.0	16	1800x600
P2T188	1779	70.0	759	29.9	16	1800x800

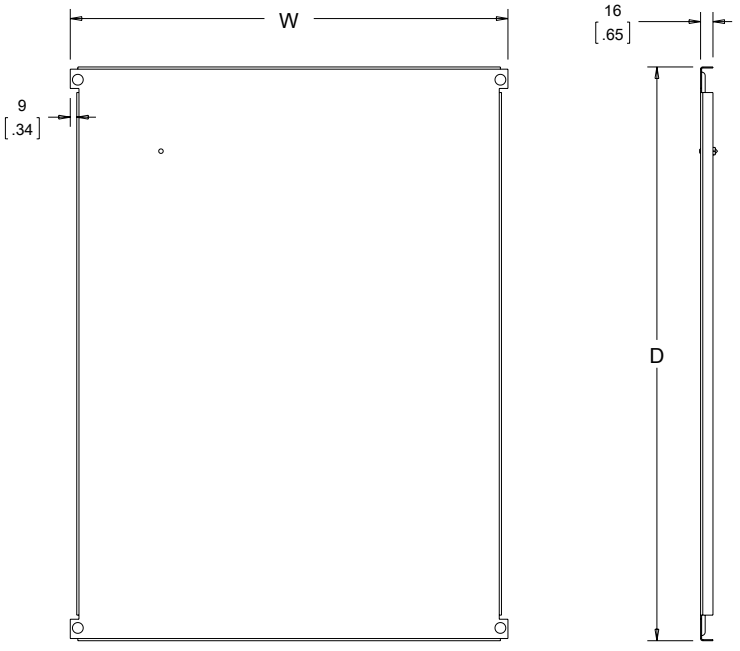

89129482

Model	Component	Type	Width	Depth	Specialty		Catalog Number
P2	T	Blank	8	6	Blank	=	P2T86
PROLINE G2	Top	Blank = solid top P = pagoda top PH = top with cutout for high-performance pagoda vent	mm 18 = 1800 16 = 1600 14 = 1400 12 = 1200 10 = 1000 8 = 800 6 = 600 4 = 400	mm 10 = 1000 8 = 800 6 = 600 5 = 500 4 = 400	Blank = standard HF = EMC protected		

NOTE: Not every combination is available as a standard product.

PAGODA TOP

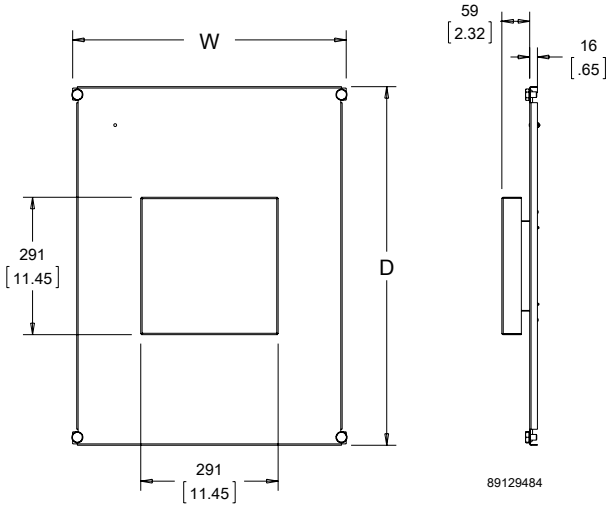

APPLICATION

Pagoda tops can be used on the top of a modular enclosure for active cooling. The design features a drip-proof raised pagoda vent with a 115-volt integral axial exhaust fan, and includes gasket seals to maintain a NEMA 12 enclosure rating.

FEATURES

- Maintains NEMA 12 Type rating on enclosure when installed
- Drip-protected, raised pagoda vent
- Integral axial exhaust fan for active cooling

SPECIFICATIONS

- 14-gauge (1.75 mm) steel
- Pagoda Tops 1200 mm and greater in width have one drip-protected, raised pagoda vent opening positioned over one side that can be oriented for right or left ventilation
- Seamless polyeurethane gasket between top and frame (UL component recognized) provides a water-tight, dust-tight seal against moisture and contaminants
- Includes four M12 hex bolts for installation
- Lifting eyes (not included) can be used instead of bolts

FINISH

- Polyester powder paint; RAL 7035 textured light gray standard
- Custom colors available

ACCESSORIES

- Lifting eyes

BULLETIN: P40

Standard Product

Catalog Number	W (mm)	W (in.)	D (mm)	D (in.)	Fits Frame WxD (mm)
P2TP45	379	14.9	459	18.1	400x500
P2TP46	379	14.9	559	22.0	400x600
P2TP64	579	22.8	359	14.1	600x400
P2TP65	579	22.8	459	18.1	600x500
P2TP66	579	22.8	559	22.0	600x600
P2TP68	579	22.8	759	29.9	600x800
P2TP84	779	30.7	359	14.1	800x400
P2TP85	779	30.7	459	18.1	800x500
P2TP86	779	30.7	559	22.0	800x600
P2TP88	779	30.7	759	29.9	800x800
P2TP810	779	30.7	959	37.8	800x1000
P2TP104	979	38.5	359	14.1	1000x400
P2TP105	979	38.5	459	18.1	1000x500
P2TP106	979	38.5	559	22.0	1000x600
P2TP108	979	38.5	759	29.9	1000x800
P2TP124	1179	46.4	359	14.1	1200x400
P2TP125	1179	46.4	459	18.1	1200x500
P2TP126	1179	46.4	559	22.0	1200x600
P2TP128	1179	46.4	759	29.9	1200x800
P2TP164	1579	62.2	359	14.1	1600x400
P2TP165	1579	62.2	459	18.1	1600x500
P2TP166	1579	62.2	559	22.0	1600x600
P2TP168	1579	62.2	759	29.9	1600x800
P2TP185	1779	70.0	459	18.1	1800x500
P2TP186	1779	70.0	559	22.0	1800x600
P2TP188	1779	70.0	759	29.9	1800x800

Model	Component	Type	Width	Depth	Specialty		Catalog Number
P2	T	P	8	6	Blank	=	P2TP86
PROLINE G2	Top	Blank = solid top P = pagoda top PH = top with cutout for high-performance pagoda vent	mm 18 = 1800 16 = 1600 14 = 1400 12 = 1200 10 = 1000 8 = 800 6 = 600 4 = 400	mm 10 = 1000 8 = 800 6 = 600 5 = 500 4 = 400	Blank = standard HF = EMC protected		

NOTE: Not every combination is available as a standard product.

PAGODA EXHAUST VENT

APPLICATION

Pagoda Exhaust Vents can be field-installed on any ProLine or ProLine G2 solid top to provide active enclosure cooling.

FEATURES

- Axial fan and finger guard mounted in housing
- Drip-protected, raised cover is removable from the inside of the enclosure

SPECIFICATIONS

- 14-gauge (1.75 mm) steel
- 115V or 230V versions with lead wires
- 115V power cord option
- Rated UL Type 1; installing this component on an enclosure brings the enclosure rating to UL Type 1
- Includes gasket and mounting hardware

FINISH

- Polyester powder paint; RAL 7035 textured light gray standard
- Custom colors available

BULLETIN: DTHRM, P20

Standard Product

Catalog Number	Descriptioin	Volts	Hz
PPT1	LEADWIRE	115	50/60
PPT2	LEADWIRE	230	60
PPT1C	Power Cord	115	60

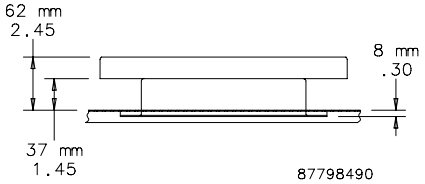

Performance Curve: 6 in. Fans

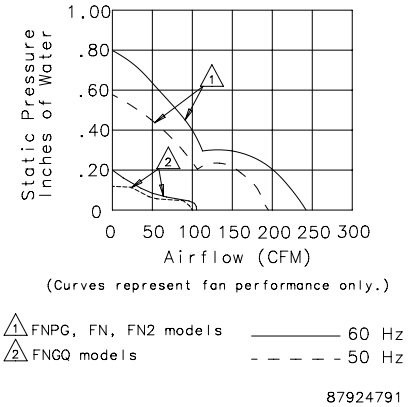

HIGH-PERFORMANCE PAGODA EXHAUST VENT

APPLICATION

High-Performance Pagoda Exhaust Vents can be installed on any ProLine or ProLine G2 solid top.

FEATURES

- Integral centrifugal blower mounted in a protective housing
- Can be installed on any ProLine or ProLine G2 solid top

SPECIFICATIONS

- Drip-protected, raised cover is removable from the inside of the enclosure
- Housing includes a drip-proof removable hood, wire mesh finger guard and perimeter gasket
- Lead wire or power cord options
- 115V or 230V versions
- Rated UL Type 1; installing this component on an enclosure brings the enclosure rating to UL Type 1
- Installation hardware is included

FINISH

- Polyester powder paint; RAL 7035 textured light gray standard
- Custom colors available

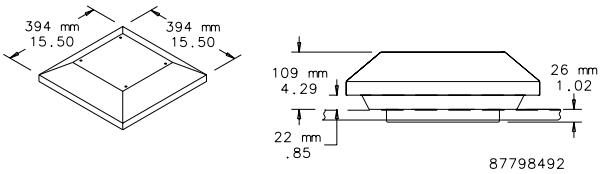

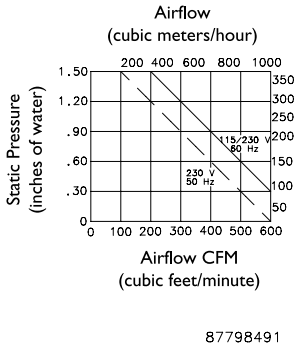

BULLETIN: DTHRM, P20, P20EM

Standard Product

Catalog Number	Description	Volts	Hz	Full Load Amps	Use with
PPTHP1	LEADWIRE	115	60	1.7	Top with high-performance pagoda vent cutout
PPTHP2	LEADWIRE	230	60	0.9	Top with high-performance pagoda vent cutout
PPTHP1C	Power Cord	115	60	1.7	Top with high-performance pagoda vent cutout
PPTHP1EMC	LEADWIRE	115	60	1.7	Top with high-performance pagoda vent cutout EMC
PPTHP2EMC	LEADWIRE	230	60	0.9	Top with high-performance pagoda vent cutout EMC

HIGH-PERFORMANCE PAGODA EXHAUST VENT CUTOUT TOP

APPLICATION

The High-Performance Pagoda Exhaust Vent Cutout Top has a cutout that accepts one high-performance pagoda vent.

SPECIFICATIONS

- Cutout top for High-Performance, Pagoda Exhaust Vents
- Bolts are furnished to hold top in position (lifting eyes can be used in place of bolts)
- Seamless, polyurethane gasket between top and frame (UL component recognized) provides a watertight, dust-tight seal against moisture and contaminants
- Ground studs are included
- Note: A High Performance Pagoda Exhaust Vent can be used with any ProLine G2 solid top by requesting a cutout modification

FINISH

- Polyester powder paint; RAL 7035 textured light gray standard
- Custom colors available

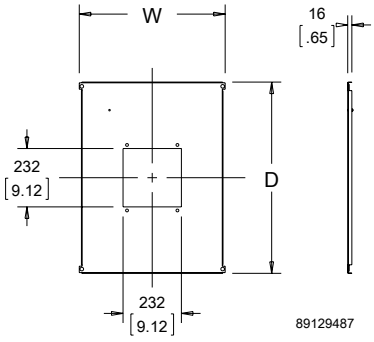

BULLETIN: P40

Standard Product

Catalog Number	W (mm)	W (in.)	D (mm)	D (in.)	Gauge	Fits Frame WxD (mm)
P2TPH66	592	23.30	599	23.57	16	600 x 600
P2TPH68	592	23.30	799	31.45	14	600 x 800
P2TPH86	792	31.17	599	23.57	16	800 x 600
P2TPH88	792	31.17	799	31.45	14	800 x 800

TOP MOUNTING MODULE

APPLICATION

The Top Mounting Module installs to the top of an enclosure providing space for cable management, and facilitating cable passage into the enclosure from above. The module is constructed from a mini ProLine frame, and as such is joinable to accommodate multi-bay solutions. Removable covers are supplied with the module for sealing purposes, while the standard Solid Top (sold separately or included with Industrial Package) is used to enclose the solution as it is mounted to the top of the module.

SPECIFICATIONS

- NEMA Type 12 environmental rating
- Solution includes frame, width and depth mounted covers, gaskets for sealing junction between top of frame and module, and all installation hardware to secure to the top of a G2 frame. Solid Top sold separately, but also included with standard Industrial Package.
- Cover plates are 16-gauge (1.5 mm) mild steel, with a single ground stud per cover
- Polyester powder paint; RAL 7035 textured light gray standard
- 200mm and 300mm heights available

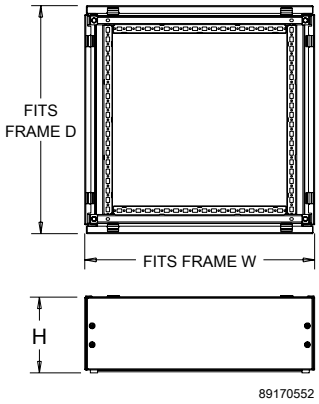

BULLETIN: P40

Standard Product **200mm Height**

Catalog Number	Fits Frame Type	Fits Frame WxD - mm	H (mm)	H (in.)
P2TMM265	Single-Bay	600 x 500	199	7.84
P2TMM266	Single-Bay	600 x 600	199	7.84
P2TMM268	Single-Bay	600 x 800	199	7.84
P2TMM285	Single-Bay	800 x 500	199	7.84
P2TMM286	Single-Bay	800 x 600	199	7.84
P2TMM288	Single-Bay	800 x 800	199	7.84
P2TMM2105	Single-Bay	1000 x 500	199	7.84
P2TMM2106	Single-Bay	1000 x 600	199	7.84
P2TMM2108	Single-Bay	1000 x 800	199	7.84
P2TMM2125	Double-Bay	1200 x 500	199	7.84
P2TMM2126	Double-Bay	1200 x 600	199	7.84
P2TMM2165	Double-Bay	1600 x 500	199	7.84
P2TMM2166	Double-Bay	1600 x 600	199	7.84

Standard Product **300mm Height**

Catalog Number	Fits Frame Type	Fits Frame WxD - mm	H (mm)	H (in.)
P2TMM366	Single-Bay	600 x 600	299	11.78
P2TMM386	Single-Bay	800 x 600	299	11.78
P2TMM3106	Single-Bay	1000 x 600	299	11.78
P2TMM3126	Double-Bay	1200 x 600	299	11.78