FS66S GLOBAL FREE-STAND SINGLE AND DUAL ACCESS, TYPE 4X

INDUSTRY STANDARDS

UL 508A Listed; Type 3R, 4, 4X, 12; File No. E61997
cUL Listed per CSA C22.2 No 94; Type 3R, 4, 4X, 12; File No. E61997

NEMA/EEMAC Type 3, 3R, 4, 4X, 12, 13
E.I.A. RS-310-D
IEC 60529, IP66,
IEC 62208
Meets NEMA Type 3RX requirements

APPLICATION

These enclosures are used in harsh industrial environments to house large components such as motor starters, drives, contactors and PLCs as well as a wide range of other electrical and electric equipment. A modular interior rail system (PROLINE) provides an extensive range of mounting options. Whether your application calls for rack mounting, panel mounting or grid system mounting, a combination of PROLINE components can deliver the right solution for ultimate equipment mounting flexibility and convenience. Three-point latching and sealing provide industry-leading protection from dust, oil and water. The FS66S enclosures are used extensively in oil and gas, water/wastewater, petrochemical and power plant environments and offer a perfect solution to outdoor DCS applications.

Four styles are available to provide maximum flexibility:

1. One-Door Single-Access Enclosures (single door on front)
2. One-Door Dual-Access Enclosures (single door on front and rear)
3. Two-Door Single-Access Enclosures (doors close on a removable centerpost)
4. Two-Door Dual-Access Enclosures (doors close on a removable centerpost on front and rear)

Each style is also offered in 304 or 316L stainless steel, and can be manufactured as standard duty (14 gauge) and heavy duty (12 gauge).

SPECIFICATIONS

- Internal grid mounting system and PROLINE frame compatible for easy and fast panel installation
- Enclosure with contents to support Standard Duty 500Kg (1102 lb.) evenly distributed and Heavy Duty 1000Kg (2205 lb.) evenly distributed
- Uni-body design with seams continuously welded and ground smooth
- Two-door enclosures provided with a removable centerpost for easy panel installation
- Heavy-duty stainless steel lifting eyes
- Heavy-duty three-point latching mechanism operated by 316L stainless steel POWERGLIDE padlocking handle
- Seamless foam-in-place gasket assures a water-tight and dust-tight seal
- Body flange trough collar channels liquids and contaminants away from door opening and installed equipment
- Removable hidden hinges
- Built-in plinth base that allows for flexible cable entry
- Gland plate on the bottom offers cable entry options
- Painted or galvanized back panels can be rear-mounted in single-access enclosures and back-to-back in dual access enclosures
- Bonding provision on door

FINISH

Enclosures are unpainted. Cover, sides, top and bottom have smooth #4 brushed finish.

ACCESSORIES

Steel, Stainless Steel and Non-Metallic Window Kits
Thermoplastic Data Pocket
Full Subpanel
Stop Arm Kit
Large-Volume ATEX Purge System Type Y, Z and Ex [pz]

MODIFICATION AND CUSTOMIZATION

Hoffman excels at modifying and customizing products to your specifications. Contact your local Hoffman sales office or distributor for complete information.

BULLETIN: FS66S

Standard Product **One-Door, Single-Access Enclosures**

Catalog Number	Nominal AxBxCA x B x C	AxBxC in./mm	Material	Thickness (ga.)
FS180654SSP0	1800x600x500	73.92 x 24.26 x 19.03 1879 x 616 x 483	Stainless Steel 304	14
FS180654SHP0	1800x600x500	73.97 x 24.32 x 19.11 1879 x 618 x 485	Stainless Steel 304	12
FS180656SSP0	1800x600x500	73.92 x 24.26 x 19.03 1878 x 616 x 483	Stainless Steel 316L	14
FS180656SHP0	1800x600x500	73.97 x 24.32 x 19.11 1879 x 618 x 485	Stainless Steel 316L	12
FS181054SSP0	1800x1000x500	73.92 x 40.01 x 19.06 1878 x 1016 x 484	Stainless Steel 304	14
FS181054SHP0	1800x1000x500	73.97 x 40.06 x 19.11 1879 x 1018 x 485	Stainless Steel 304	12
FS181056SSP0	1800x1000x500	73.92 x 40.01 x 19.06 1878 x 1016 x 484	Stainless Steel 316L	14
FS181056SHP0	1800x1000x500	73.97 x 40.06 x 19.11 1879 x 1018 x 485	Stainless Steel 316L	12
FS200884SSP0	2000x800x800	81.79 x 32.14 x 30.84 2078 x 816 x 783	Stainless Steel 304	14
FS200884SHP0	2000x800x800	81.84 x 32.19 x 30.92 2079 x 818 x 785	Stainless Steel 304	12
FS200886SSP0	2000x800x800	81.79 x 32.14 x 30.84 2078 x 816 x 783	Stainless Steel 316L	14
FS200886SHP0	2000x800x800	81.84 x 32.19 x 30.92 2079 x 818 x 785	Stainless Steel 316L	12

ONE-DOOR, SINGLE ACCESS

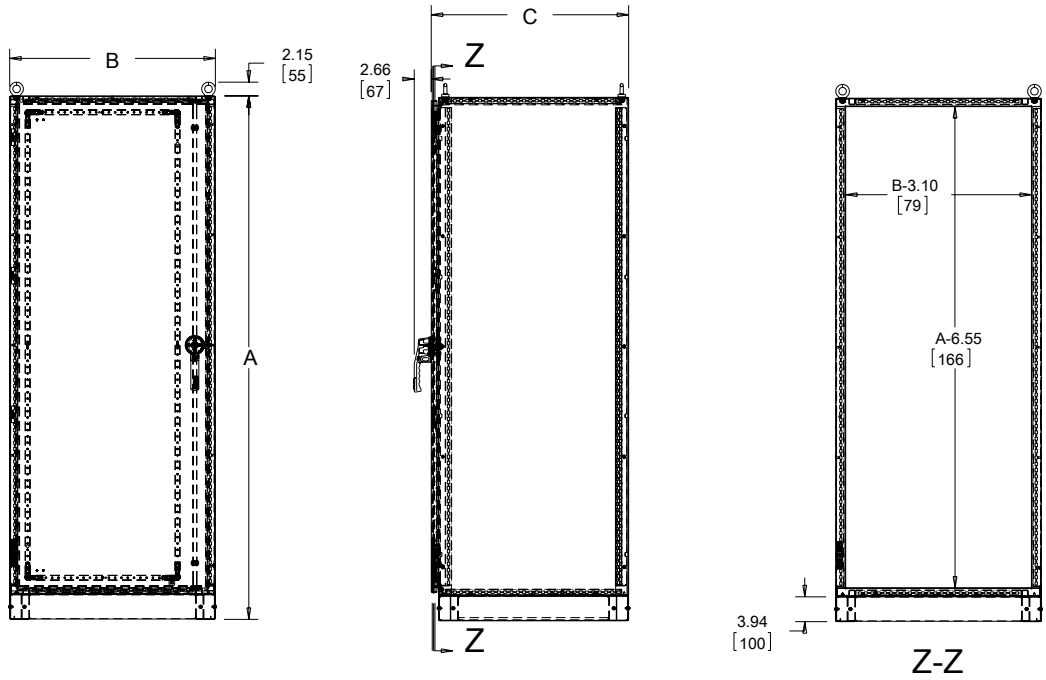

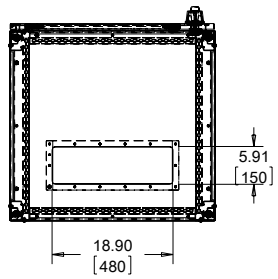

Standard Product **One-Door, Dual Access Enclosures**

Catalog Number	Nominal AxBxC	AxBxC in./mm	Material	Thickness (ga.)
FS180654DSP0	1800x600x500	73.92 x 24.26 x 20.15 1878 x 616 x 512	Stainless Steel 304	14
FS180654DHP0	1800x600x500	73.97 x 24.32 x 20.26 1879 x 618 x 515	Stainless Steel 304	12
FS180656DSP0	1800x600x500	73.92 x 24.26 x 20.15 1878 x 616 x 512	Stainless Steel 316L	14
FS180656DHP0	1800x600x500	73.97 x 24.32 x 20.26 1879 x 618 x 515	Stainless Steel 316L	12
FS181054DSP0	1800x1000x500	73.92 x 40.01 x 20.15 1878 x 1016 x 512	Stainless Steel 304	14
FS181054DHP0	1800x1000x500	73.97 x 40.06 x 20.26 1879 x 1018 x 515	Stainless Steel 304	12
FS181056DSP0	1800x1000x500	73.92 x 40.01 x 20.15 1878 x 1016 x 512	Stainless Steel 316L	14
FS181056DHP0	1800x1000x500	73.97 x 40.06 x 20.26 1879 x 1018 x 515	Stainless Steel 316L	12
FS200884DSP0	2000x800x800	81.79 x 32.14 x 31.97 2078 x 816 x 812	Stainless Steel 304	14
FS200884DHP0	2000x800x800	81.84 x 32.19 x 32.07 2079 x 818 x 815	Stainless Steel 304	12
FS200886DSP0	2000x800x800	81.79 x 32.14 x 31.97 2078 x 816 x 812	Stainless Steel 316L	14
FS200886DHP0	2000x800x800	81.84 x 32.19 x 31.91 2079 x 818 x 811	Stainless Steel 316L	12

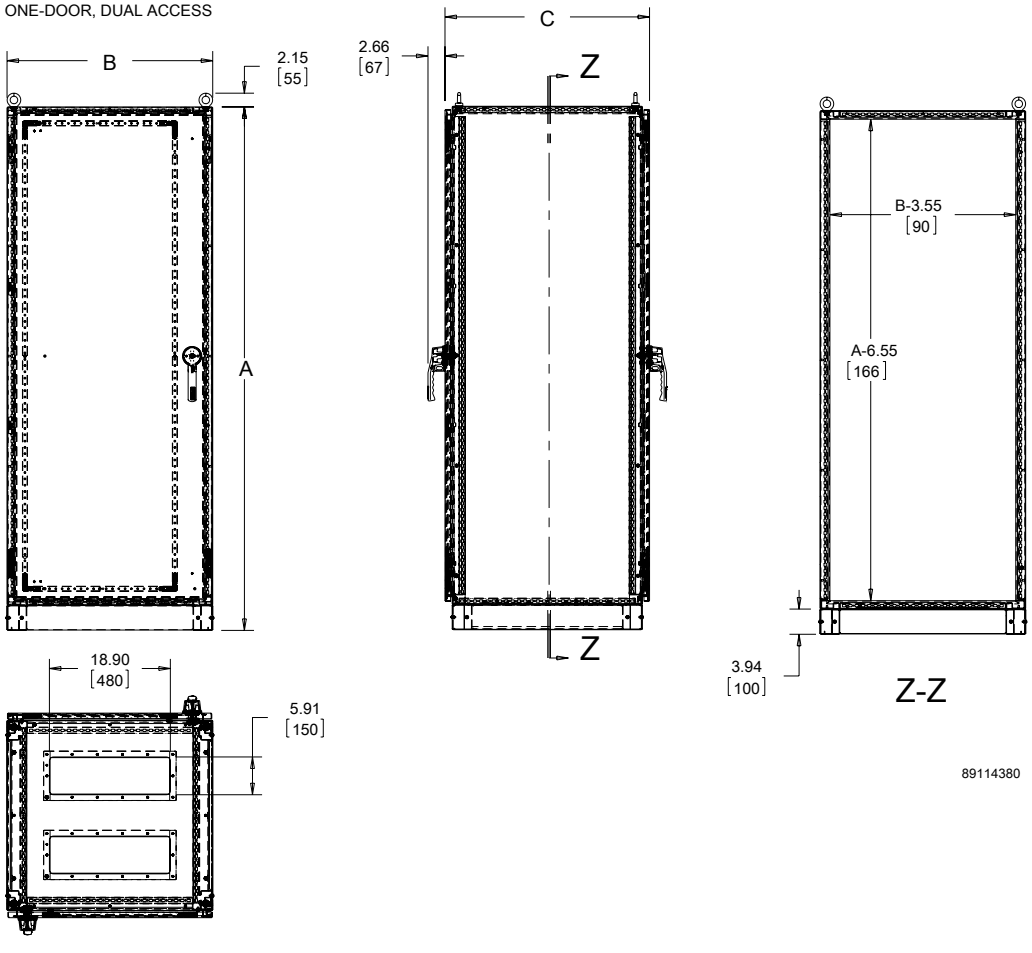

Standard Product **Two-Door, Single Access Enclosures**

Catalog Number	Nominal AxBxC	AxBxC in./mm	Material	Thickness (ga.)
FS201284SSP0	2000x1200x800	81.79 x 47.89 x 30.87 2078 x 1216 x 784	Stainless Steel 304	14
FS201284SHP0	2000x1200x800	81.84 x 47.94 x 30.92 2079 x 1218 x 785	Stainless Steel 304	12
FS201286SSP0	2000x1200x800	81.79 x 47.89 x 30.87 2078 x 1216 x 784	Stainless Steel 316L	14
FS201286SHP0	2000x1200x800	81.84 x 47.94 x 30.92 2079 x 1218 x 785	Stainless Steel 316L	12

TWO-DOOR, SINGLE ACCESS

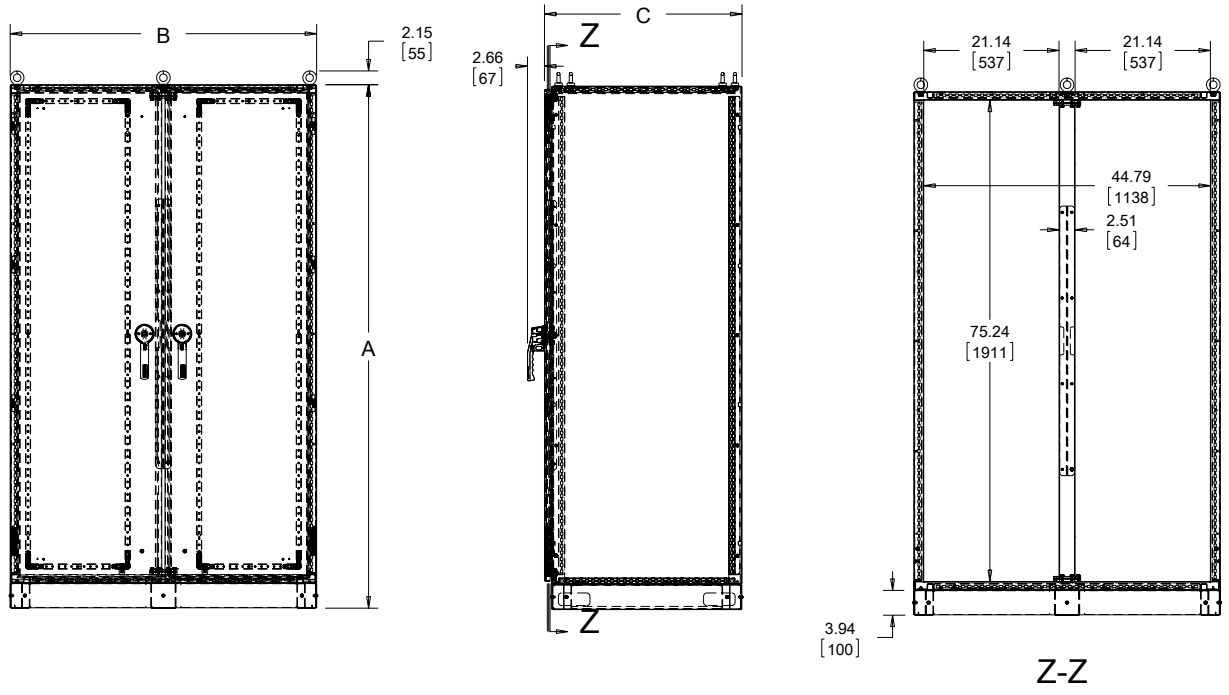

89114381

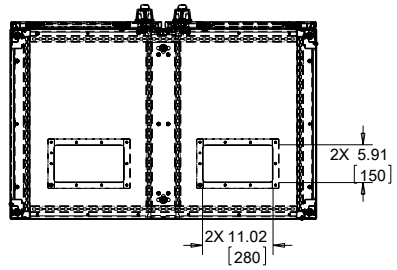

Standard Product **Two-Door, Dual Access Enclosures**

Catalog Number	Nominal AxBxC	AxBxC in./mm	Material	Thickness (ga.)
FS201284DSP0	2000x1200x800	81.79 x 47.89 x 31.97 2078 x 1216 x 812	Stainless Steel 304	14
FS201284DHP0	2000x1200x800	81.79 x 47.97 x 32.07 2078 x 1218 x 815	Stainless Steel 304	12
FS201286DSP0	2000x1200x800	81.79 x 47.89 x 32.02 2078 x 1216 x 813	Stainless Steel 316L	14
FS201286DHP0	2000x1200x800	81.84 x 47.94 x 32.02 2079 x 1218 x 813	Stainless Steel 316L	12

TWO-DOOR, DUAL ACCESS

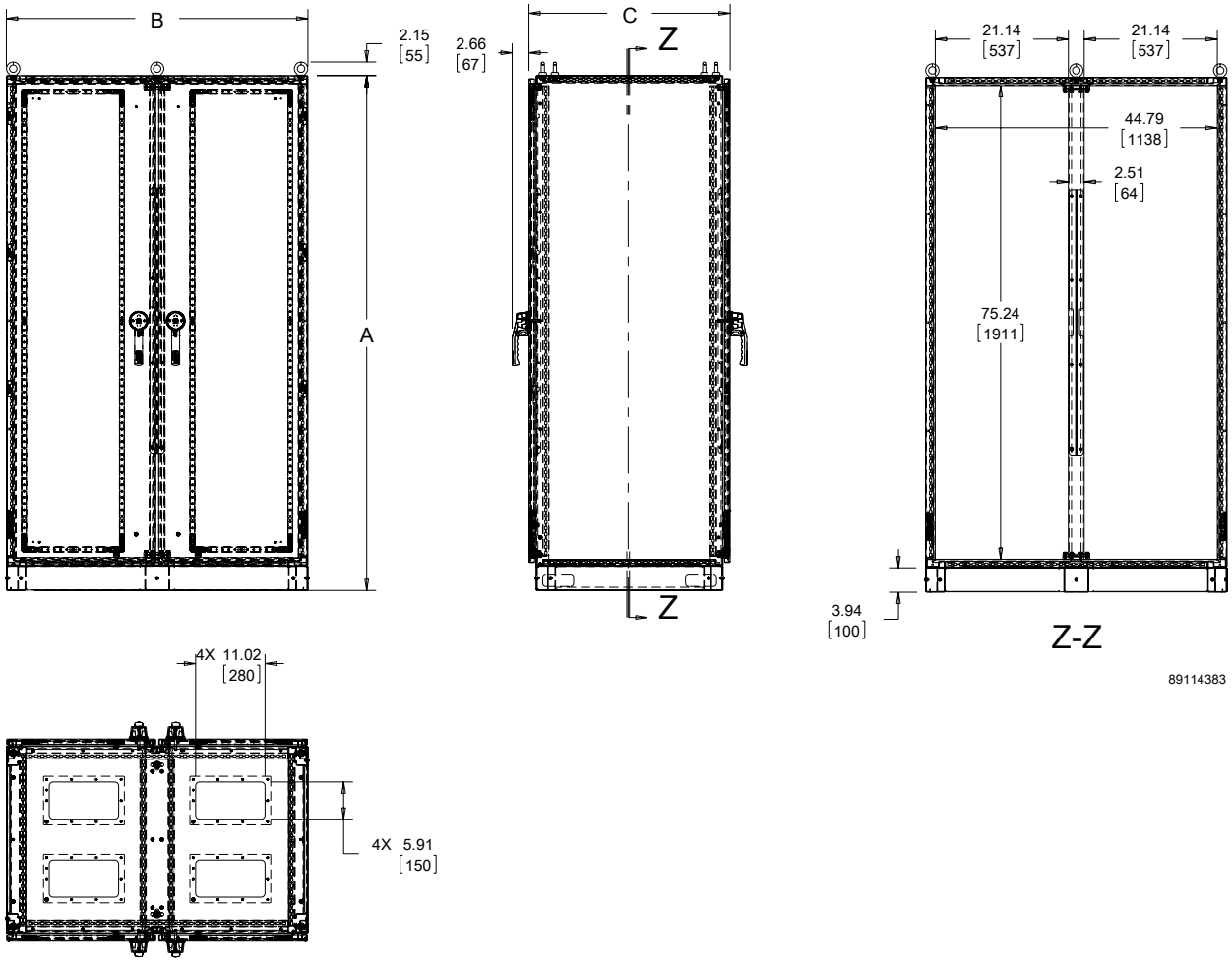

FS66S PANEL, RACK AND GRID MOUNTING ACCESSORIES

FS66S enclosures utilize PROLINE internal components to provide an extensive range of mounting options. Whether your application calls for rack mounting, panel mounting or grid system mounting, a combination of PROLINE components can deliver the right solution.

Panel Mounting

A complete range of panel mounting options makes optimum use of internal enclosure space.

- A wider door opening offers more usable space for component mounting. Subpanels can be mounted front-to-back in 25-mm increments
- Partial-height panels and swing-out panels offer additional flexibility

Rack Mounting

If your application calls for 19-in., 23-in. or 24-in. mounted devices, FS66S provides a solution.

- 19-in., 23-in. and 24-in. rack-mount accessories include shelves, drawers and panels
- Adapter brackets allow rack angles to be used in wider cabinets
- Plated rack angles offer excellent conductivity for EMC-shielded applications

Grid System Mounting

A variety of grid mounting options lets you mount components directly on the frame. Vertical and horizontal grid straps extend the internal framework while standard fasteners simplify installation and allow multi-source access to fasteners.

Panel and Grid Mounting Accessories

A (Nominal)	B (Nominal)	C (Nominal)	Full Subpanel[a]	Swing-Out Panel[f]	Center Upright[b]	Transformer Rail[e]	One-Row Grid Straps Front-to-Back[c]	Three-Row Grid Strap Front-to-Back[c]	One-Row Grid Straps Left-to-Right[d]	Three-Row Grid Strap Left-to-Right[d]	Full Height Vertical Grid Strap
1800	1000	500	PPF1810	—	PCU18	—	PGH1S5	PGH3S5	PGH1S11	PGH3S11	PGH3S18V
1800	600	500	PPF186	PSP186	—	PTR6	PGH1S5	PGH3S5	PGH1S7	PGH3S7	PGH3S18V
2000	800	800	PPF208	PSP208	PCU20	PTR8	PGH1S8	PGH3S8	PGH1S9	PGH3S9	PGH3S20V
2000	1200	800	PPF2012	PSP206	PCU20	PTR6 PTR12	PGH1S8	PGH3S8	PGH1S13	PGH3S13	PGH3S20V

[a] Mount to top and bottom of frame. Glide blocks position subpanel on frame bottom. Maximum size subpanel shown in chart.

[b] Center uprights are used in 800-mm wide and 1200-mm wide frames to allow mounting of accessories for 600-mm frames. These accessories include partial panels, swing-out panels, rack angles, rack angle accessories and grid system components.

[c] Grid system straps fit horizontally from front to back on frame top and bottom openings.

[d] Grid straps and transformer rails fit horizontally from right to left between grid straps or holes in frames.

[e] Use clamping nut package catalog number APS1420CN (1/4-20) or catalog number APS1618CN (5/16-18) for additional mounting options.

[f] Requires center upright to install.

Rack Mounting Accessories

A (nominal)	B (nominal)	19-in. Full-Height. Rack Angles Square Hole	19-in. Full-Height. Rack Angles Tapped	23-in. Full-Height Rack Angles Tapped	24-in. Full-Height Rack Angles Square Hole	24-in. Full-Height Rack Angles Tapped	Frame Reducing Brackets 19-in. Centered	Frame Reducing Brackets 19-in. Justified	Frame Reducing Brackets 23-in. Centered	Frame Reducing Brackets 23-in. Justified	Frame Reducing Brackets 24-in. Centered	Frame Reducing Brackets 24-in. Justified	Frame Accessory Brackets 19-in.	Frame Accessory Brackets 24-in.	Rack Angles Available
1800	600	PRA1918TH	PRA1918TP	—	—	—	—	—	—	—	—	—	PFB19	—	19-in.
1800	1000	PRA1918TH	PRA1918TP	—	PRA2418TH	PRA2418TP	PRB200	—	—	—	—	PRB100 PRB50	PFB19	PFB24	19-in. 24-in.
2000	800	PRA1920TH	PRA1920TP	PRA2320TP	PRA2420TH	PRA2420TP	PRB100	PRB200	PRB50	PRB100	PRB50	PRB100	PFB19	PFB24	19-in. 24-in.
2000	1200	PRA1920TH	PRA1920TP	—	—	—	—	—	—	—	—	—	PFB19	—	19-in.

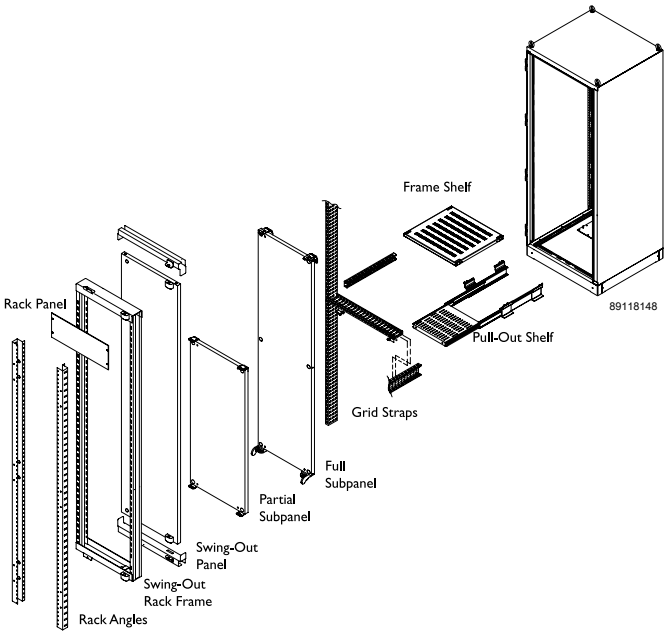

FULL SUBPANEL

- All necessary mounting hardware is included
- Subpanels are 12 gauge (2.5-mm) steel (subpanels for double-bay enclosures 1400-mm tall or taller are 10 gauge steel), have flanges on all sides and are painted white
- Conductive subpanels are unpainted galvanized steel
- Subpanels can be mounted at nearly any depth in 25-mm increments
- Mounting hardware attaches to the top or to the sides of the frame
- Additional Mounting Hardware (catalog number PMKPF) is available for applications requiring more support in the center or bottom of the subpanel. This is required if the enclosure will be tipped in transit or if the panel is not located at the bottom of the enclosure on the glide blocks. In addition, 3-row grid straps are required for installation unless the panel is in the rearmost position.

BULLETIN: P20

PROLINE subpanels are designed to provide maximum panel depth, panel size and ease of installation. Full subpanels slide into the frame on nylon glide blocks, which support the entire weight of the subpanel.

Full Subpanel

Catalog Number	Material	H mm/in.	W mm/in.
PPF186	Steel	1685 66.34	530 20.87
PPF1810	Steel	1685 66.34	930 36.61
PPF208	Steel	1885 74.21	730 28.74
PPF2012	Steel	1885 74.21	1130 44.49

Additional Mounting Hardware

Catalog Number	Description
PMKPF	Additional Side Mounting Hardware (see Detail in drawing)

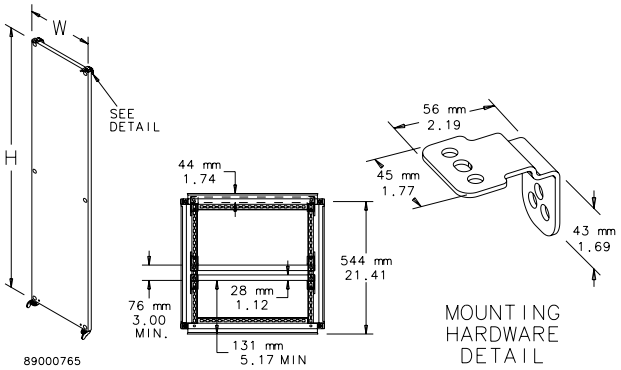

PANEL SUPPORT BRACE

Panel Support Braces give additional support to single- and double-bay panels in heavy loading applications and minimize the vibration created by components mounted on the panel. Braces can be installed on existing systems without removing the panel. Panel support braces are furnished in pairs. Braces are unpainted galvanized steel.

BULLETIN: P20

Catalog Number	L (mm)	L (in.)	Fits Panel Width (mm)
PSB10	911	35.87	1000
PSB12	1111	43.74	1200
PSB16	1511	59.49	1600
PSB18	1711	67.36	1800

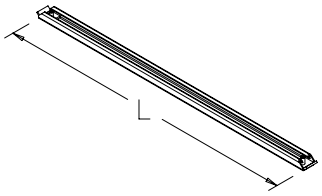

PARTIAL SUBPANEL

Partial Subpanels are 12 gauge steel, have flanges on four sides and are painted white. Panels can be positioned vertically in 25-mm increments and also can be positioned at any depth in 25-mm increments using the optional grid straps. Conductive subpanels are unpainted galvanized steel. All necessary mounting hardware is included.

BULLETIN: P20

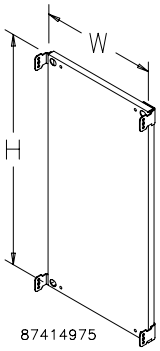

Catalog Number	Material	H (mm)	H (in.)	W (mm)	W (in.)	Fits Frame
PPP46	Steel	360	14.17	530	20.87	700 mm or taller
PPP46G	Conductive	360	14.17	530	20.87	700 mm or taller
PPP47	Steel	360	14.17	630	24.80	700 mm or taller
PPP47G	Conductive	360	14.17	630	24.80	700 mm or taller
PPP48	Steel	360	14.17	730	28.74	700 mm or taller
PPP48G	Conductive	360	14.17	730	28.74	700 mm or taller
PPP412	Steel	360	14.17	1130	44.49	700 mm or taller
PPP86	Steel	735	28.94	530	20.87	1400 mm or taller
PPP86G	Conductive	735	28.94	530	20.87	1400 mm or taller
PPP87	Steel	735	28.94	630	24.80	1400 mm or taller
PPP88	Steel	735	28.94	630	24.80	1400 mm
PPP88G	Conductive	735	28.94	730	28.74	1400 mm or taller
PPP810	Steel	735	28.94	930	36.61	1400 mm or taller
PPP96	Steel	835	32.87	530	20.87	1400 mm
PPP96G	Conductive	835	32.87	530	20.87	1400 mm or taller
PPP97	Steel	835	32.87	630	24.80	1400 mm or taller
PPP97G	Conductive	835	32.87	630	24.80	1400 mm or taller
PPP98	Steel	835	32.87	730	28.74	1400 mm or taller
PPP98G	Conductive	835	32.87	730	28.74	1400 mm or taller
PPP910	Steel	835	32.87	930	36.61	1400 mm or taller
PPP910G	Conductive	835	32.87	930	36.61	1400 mm or taller
PPP106	Steel	935	36.81	530	20.87	1400 mm or taller
PPP106G	Conductive	935	36.81	530	20.87	1400 mm or taller
PPP108	Steel	935	36.81	730	28.74	1400 mm or taller
PPP108G	Conductive	935	36.81	730	28.74	1400 mm or taller
PPP116	Steel	1035	40.75	530	20.87	1400 mm or taller
PPP116G	Conductive	1035	40.75	530	20.87	1400 mm or taller

TRANSFORMER RAILS

APPLICATION

Transformer Rails are used to mount heavy components and transformers in the bottom of an enclosure.

FEATURES

- Installed side-to-side in the frame for component mounting
- Includes four M10 clamping nuts and bolts to attach equipment to rails

SPECIFICATIONS

- Rails slotted to fit the integral mounting holes in the frame
- All mounting hardware included

FINISH

Plated

BULLETIN: P20

Catalog Number	Length (mm)	Length (in.)	Fits Frame Width (mm)
PTR6	534	21.02	600
PTR8	734	28.90	800
PTR12	1134	44.65	1200

SWING-OUT PANEL

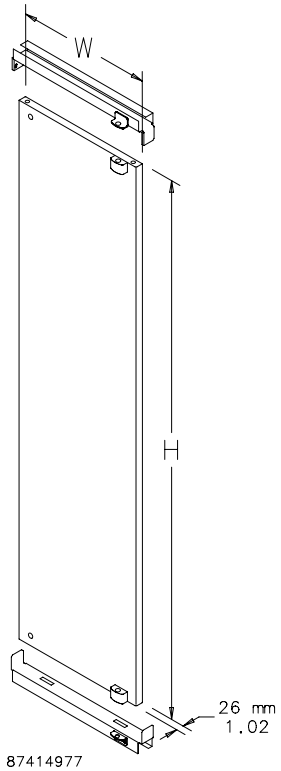

Swing-Out Panels allow a front-mounted panel to pivot out of an enclosure frame opening. This accessory includes a white panel and all the necessary hardware.

- Swing-Out Panels are available for 600-, 700- and 800-mm wide enclosures
- Panels provide 170 degrees of rotation, with capability to hinge from the right or left side
- Spring-loaded pivot post allows for easy installation
- Supports have a white finish. Hinge blocks are anodized black.
- Quarter-turn latches are provided to secure the Swing-Out Panel in the closed position

BULLETIN: P20

Catalog Number	H mm/in.	W mm/in.	Fits Frame	Fits Frame Width
PSP186	1638 64.49	515 20.28	1800 or taller	600
PSP206	1838 72.36	515 20.28	2000 or taller	600
PSP208	1838 72.36	715 28.15	2000 or taller	800

GROUNDING BAR SYSTEM

INDUSTRY STANDARDS

UL Component Recognized; File No. E61997

APPLICATION

Three sizes of grounding bars and insulated mounting brackets are available. Bars are plated copper with M6 and M5 tapped holes to provide a common point for grounding equipment. Fits all enclosures if mounted vertically. See table for horizontal mounting.

BULLETIN: P20

Catalog Number	Description	Length mm/in.	Number of Holes and Screws M6	Number of Holes and Screws M5
PGS2K	Fits 400-mm deep frame front-to-back horizontally	200 7.87	3/5	10/10
PGS4K	Fits 600-mm deep frame front-to-back horizontally	400 15.75	9/11	20/20
PGS6K	Fits 800-mm deep frame front-to-back horizontally	600 23.62	15/17	30/31

PROLINE FASTENER PACKAGES

Use to fasten components to the grid system. PGF Packages include 20 front-loading clip nuts (M6) and 20 combination-drive washer-head bolts (M6).
Grounding Package is used with the rectangular holes in the ProLine frame to provide electrical continuity between the frame and the grid system. ASM5T Package is used with ProLine frames having round holes. Package includes 20 M5 self-tapping screws.

BULLETIN: DACCY

Catalog Number	Description	Use in	Pkg. Qty.
ASM5T	M5 x 12 mm thread-forming Phillips hex head screws	Round holes	20
PGFM6	Standard Package - M6 cage nuts and bolts	Rectangular holes	20
PGFGM6	Grounding Package - M6 grounding cage nuts and bolts	Tapped holes	20

PROLINE GROUNDING KIT

The Grounding Kit allows a ProLine or ProLine G2 enclosure to be grounded to VDE specifications. Includes six 12-gauge wires 411 mm (16.19) long with ring terminations and M6 mounting hardware.

BULLETIN: P20

Catalog Number	Wire Size	Length Between Ring Terminals mm/in.	Ring Terminal Hole Diameter mm/in.
PGK	12 ga.	411 16.19	7 .29

STOP ARM KIT

Used with Heavy-Duty Swing-Out Rack Frames to lock the frame in the open position. Consists of stop arm and mounting hardware.

BULLETIN: P20

Catalog Number	Description
PSAK120	120-degree Stop Arm Kit

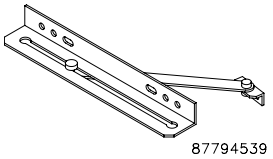

SCREW PACKAGE

Twenty plated screws are included in each package. Screws attach rack panels to rack mounting angles. Available in #10-32, #12-24, M5 and M6.

BULLETIN: A80, DACCY

Catalog Number	Description	Pkg. Qty.
AS1032	10-32 x .75	20
ES1224	12-24 x .5	20
ASM5	Metric M5 x 20	20
ASM6	Metric M6 x 16	20
ASM6250	Metric M6 x 16	250

CAGE NUT PACKAGE

Twenty plated cage nuts are included in each package. Available in #10-32, #12-24, M5 and M6, these cage nuts fit all PROLINE and PROLINE G2 rack angles with square holes.

BULLETIN: DACCY

Catalog Number	Description	Pkg. Qty.
P1032CN	10-32 thread	20
P1224CN	12-24 thread	20
PM5CN	Metric M5 thread	20
PM6CN	Metric M6 thread	20

FILLER PANEL FOR RACK ANGLES

Filler Panels are used to completely fill 19-in. rack mounting spaces at top and bottom of PROLINE door opening. Extruded aluminum Filler Panels are furnished in pairs and include mounting hardware.

BULLETIN: P20

Catalog Number	Description
PFP19RA	Filler Panel for Rack Angles

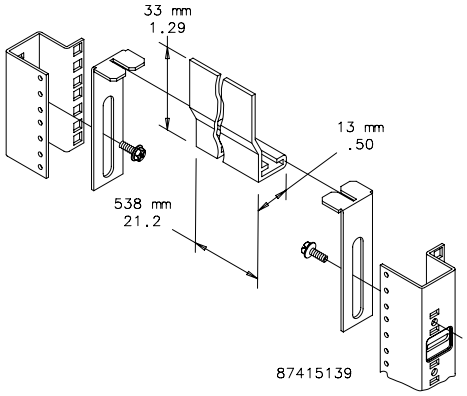

WIRE MANAGEMENT RAILS

Wire Management Rails are 14 gauge steel with a plated finish. They feature a unique hole pattern that allows either wire ties or fasteners to secure wires in place. Frame-mounting hardware is included. One package contains 20 rails.

BULLETIN: P20

Catalog Number	L (mm)	L (in.)	Fits Frame Depth
PWMR4	304	12.0	400
PWMR5	404	15.9	500
PWMR6	504	19.8	600
PWMR8	704	27.7	800
PWMR9	775	30.51	900

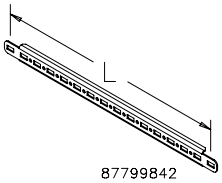

GRID SYSTEM

Grid Strap installation (side to side)

Grid strap installation
(vertical and horizontal grid straps)

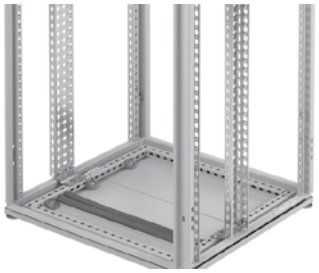

Full-height vertical grid strap

A Grid System provides a flexible extension to the internal mounting system already furnished with the ProLine frame. The Grid System allows flexible mounting capabilities in height, width and depth. Accessories or equipment can be attached directly to the Grid System using either cage nuts or front-loading cage nuts.

FULL-HEIGHT VERTICAL GRID STRAPS

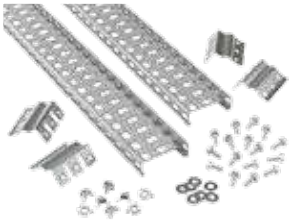

Grid Straps provide a vertical extension of the frame holes in the sides of the ProLine frame. They are sold in pairs with mounting hardware included. Vertical Grid Straps are 14 gauge plated steel. Three-row 25-mm hole spacing allows the use of cage nuts or front-loading cage nuts.

BULLETIN: P20

Catalog Number	L (mm)	L (in.)	Fits Frame Height
PGH3S7V	595	23.43	700
PGH3S14V	1295	50.98	1400
PGH3S16V	1495	58.86	1600
PGH3S18V	1695	66.73	1800
PGH3S20V	1895	74.61	2000
PGH3S22V	2095	82.48	2200

GRID STRAPS

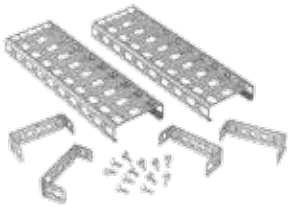

Grid Straps are 14 gauge plated steel. They are provided with specially designed rectangular holes to allow the use of cage nuts or front-loading cage nuts. Mounting holes are provided on 25-mm centers. Grid Straps are available with either 1 row or 3 rows of holes and are furnished in pairs. Mounting hardware to attach Grid Straps to the frame or to other Grid Straps is included.

- Can be mounted front-to-back horizontally across the bottom or sides of the ProLine frame
- Can be mounted left-to-right horizontally between front-to-back pairs or from the sides of the ProLine frame
- Can be mounted vertically between horizontally mounted Grid Straps

BULLETIN: DPY, P20

Catalog Number	Hole Pattern	L (mm)	L (in.)	Fits Frame Depth	Fits Frame Width
PGH1S5	One Row	342	13.46	500	–
PGH1S6	One Row	442	17.40	600	–
PGH1S7	One Row	542	21.34	700	600
PGH1S8	One Row	642	25.28	800	700
PGH1S9	One Row	742	29.21	900	800
PGH1S10	One Row	842	33.15	1000	900
PGH1S11	One Row	942	37.08	–	1000
PGH1S13	One Row	1142	44.96	–	1200
PGH1S17	One Row	1542	60.71	–	1600
PGH3S4	Three Row	242	9.53	400	–
PGH3S5	Three Row	342	13.46	500	–
PGH3S6	Three Row	442	17.40	600	–
PGH3S7	Three Row	542	21.34	700	600
PGH3S8	Three Row	642	25.28	800	700
PGH3S9	Three Row	742	29.21	900	800
PGH3S10	Three Row	842	33.15	1000	300
PGH3S11	Three Row	942	37.08	1100	1000
PGH3S12	Three Row	1242	48.89	1200	–
PGH3S13	Three Row	1142	44.96	–	1200
PGH3S17	Three Row	1542	60.71	–	1600

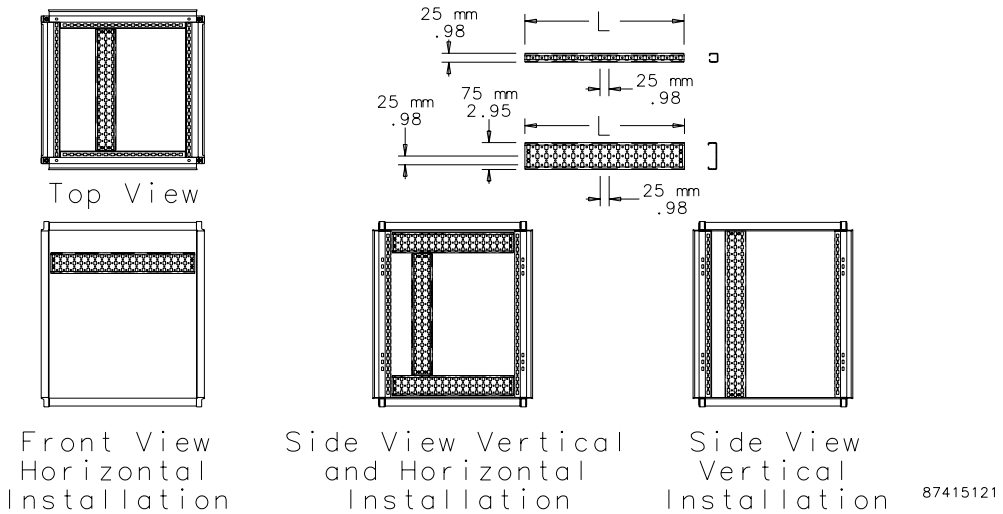

GUIDES

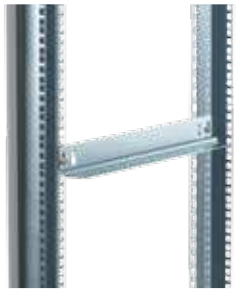

Equipment Guides help support rack-mounted equipment during installation. Guides mount between two pairs of rack angles. Slotted holes are provided for vertical or lateral adjustment. Furnished in pairs. Guides have plated finish. Mounting hardware included. Rack accessories that are shorter than the enclosure depth can be mounted to rack angles using Adjustable Rack-Mount Rails or Grid Straps. Order these items separately.

BULLETIN: P20

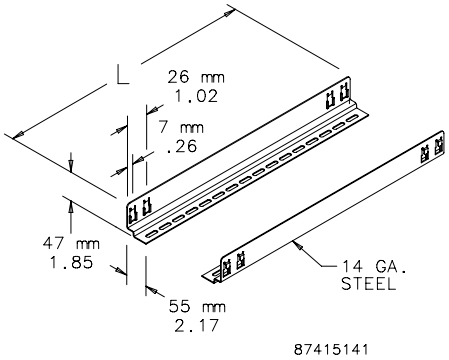

Catalog Number	L (mm)	L (in.)	Frame Depth (mm)	Frame Depth (in.)
PG4	218	8.80	400	15.75
PG5	319	12.56	500	19.68
PG6	420	16.54	600	23.62
PG8	621	24.45	800	31.49
PG9	823	32.40	900	35.43

PARTIAL SWING-OUT RACK FRAME

APPLICATION

This 19-in. Rack Frame is used when a smaller, medium-duty swing-out frame is desired. Light-weight rack equipment fits nicely into this 800-mm tall swing-out frame, providing 90 degrees of rotation and increased accessibility.

FEATURES

- Side hinge brackets are used to mount the swing frame, allowing free access above and below the swing frame
- Used with any height enclosure and hinged on the right or left

SPECIFICATIONS

- Furnished with hinges, two quarter-turn latches and mounting hardware
- Complies with ANSI/EIA RS-310-D rack mounting standards
  1. Swing-Out Rack Frame assemblies are supplied with mounting supports. Swing-Out Rack Frames can also be installed in right, left or both bays of 1200-mm wide frames using center uprights.
  2. Swing-out mounting supports mount to inside of frame at any vertical location.
  3. Mounting supports and swing-out frame can be located deeper into frame using grid system straps. Deeper mounting affects the degree of opening of swing-out frame.

FINISH

- Polyester powder paint; RAL 7035 textured light gray standard
- Custom colors available

LOAD RATING

Maximum load rating is 100 lb (45 kg)

BULLETIN: P20

Catalog Number	Fits Frame Width (mm)	Rack Units
PSF6	600	16
PSF8	800	16

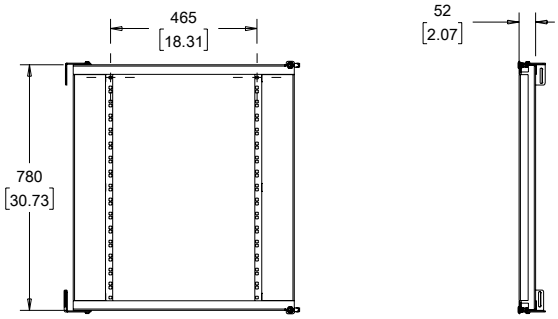

FIXED SHELF

Fixed Shelves mount to the front and back rack angles. The shelf is 14 gauge steel with adjustable 12 gauge steel supports. Adjustable to fit multiple-depth enclosures or rack angle placements. Entire assembly is finished with RAL 7035 textured light-gray polyester powder paint. Load rating is 150 lb. (68 kg).
Rack accessories that are shorter than the enclosure depth can be mounted to rack angles or frame accessory brackets attached to grid straps. Order these items separately.

BULLETIN: P20

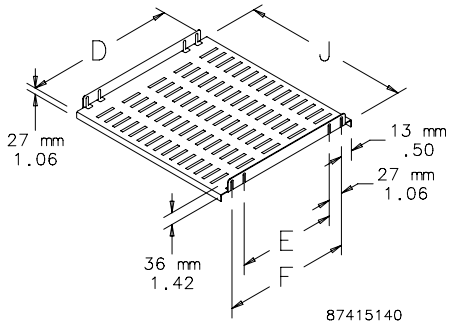

Catalog Number	D (mm)	D (in.)	E (mm)	E (in.)	F (mm)	F (in.)	J (mm)	J (in.)	Fits Rack Width
P19SH5	349	13.74	264.8	10.43	318.4	12.54	477	18.78	19 in.
P19SH6	449	17.68	364.8	14.36	418.4	16.47	477	18.78	19 in.
P19SH8	649	25.55	564.8	22.24	618.4	24.35	477	18.78	19 in.
P19SH9	749	29.49	664.8	26.17	718.4	28.28	477	18.78	19 in.
P23SH5	349	13.74	270	10.63	323.6	12.74	578.6	22.78	23 in.
P23SH6	449	17.68	370	14.57	423.6	16.68	578.6	22.78	23 in.
P23SH8	649	25.55	570	22.44	623.6	24.55	578.6	22.78	23 in.
P24SH5	349	13.74	264.8	10.43	318.4	12.54	604	23.78	24 in.
P24SH6	449	17.68	364.8	14.36	418.4	16.47	604	23.78	24 in.
P24SH8	649	25.55	564.8	22.24	618.4	24.35	604	23.78	24 in.
P24SH9	749	29.49	664.8	26.17	718.4	28.28	604	23.78	24 in.

HEAVY-DUTY SWING-OUT RACK FRAME

- Allows 19-in. rack equipment to pivot out of the enclosure frame for better accessibility. The frames mount on hinges capable of 120-degree rotation. Hinges that provide 170-degree rotation are optional.
- Spring-loaded pivot post makes installation easy
- Rack Frames are available for 600-, 700- and 800-mm wide enclosure frames
- Mounting supports for an 800-mm wide enclosure frame permit you to either center the rack-mounting frame or position it right or left. The frame can also pivot from either the left or the right for maximum flexibility.
- Mounting supports can be assembled to the top and bottom of the frame for full-height rack-mounting frames. Smaller rack-mounting frames can be mounted to the vertical frame members or to the grid straps. Order separately.
- Furnished with hinges, two quarter-turn latches and mounting hardware RAL 7035 textured gray finish
- Complies with ANSI/EIA RS-310-D rack-mounting standards
- Maximum equipment load is 300 lb.
- Mounting holes accommodate either English or metric cage nuts, which are ordered separately
  1. ***Swing-Out Rack Frame assemblies are supplied with mounting supports. Swing-Out Rack Frames can also be installed in right, left or both bays of 1200-mm wide frames using center uprights.***
  2. ***Swing-out mounting supports mount to inside of frame at any vertical location.***
  3. ***Mounting supports and swing-out frame can be located deeper into frame using grid system straps. Deeper mounting affects the degree of opening of swing-out frame.***

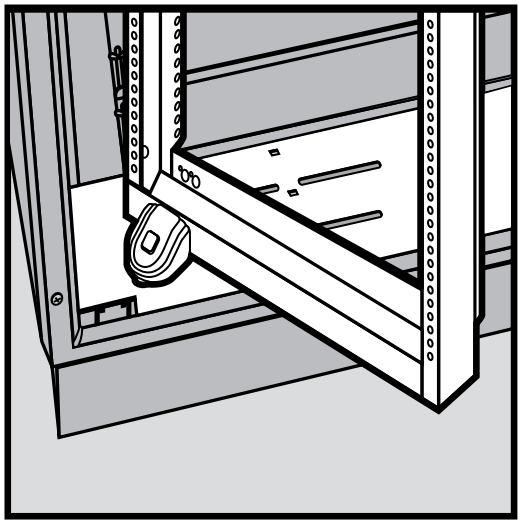

BULLETIN: P20

Catalog Number	H (mm)	H (in.)	W (mm)	W (in.)	Rack Units	Fits Frame Height	Fits Frame Width
PSF76	538	21.18	496	19.53	10	700 or taller	600
PSF77	538	21.18	496	19.53	10	700 or taller	700
PSF78	538	21.18	496	19.53	10	700 or taller	800
PSF146	1215	47.83	496	19.53	25	1400 or taller	600
PSF148	1215	47.83	496	19.53	25	1400 or taller	800
PSF168	1438	63.58	496	19.53	30	1600 or taller	800
PSF186	1615	63.58	496	19.53	34	1800 or taller	600
PSF188	1615	63.58	496	19.53	34	1800 or taller	800
PSF206	1838	72.36	496	19.53	39	2000 or taller	600
PSF207	1838	72.36	496	19.53	39	2000 or taller	700
PSF208	1838	72.36	496	19.53	39	2000 or taller	800
PSF226	2015	79.33	496	19.53	43	2200 tall	600
PSF227	2015	79.33	496	19.53	43	2200 tall	700
PSF228	2015	79.33	496	19.53	43	2200 tall	800

Standard 120° Frame Hinging

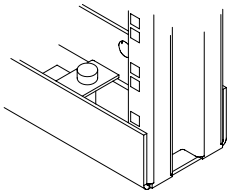

120° Mounting Position

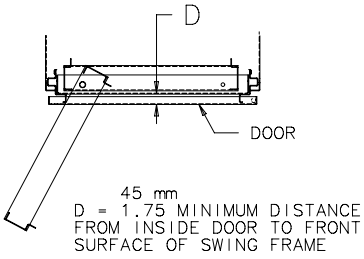

Maximum Installation Depth for 600 mm Wide Enclosures

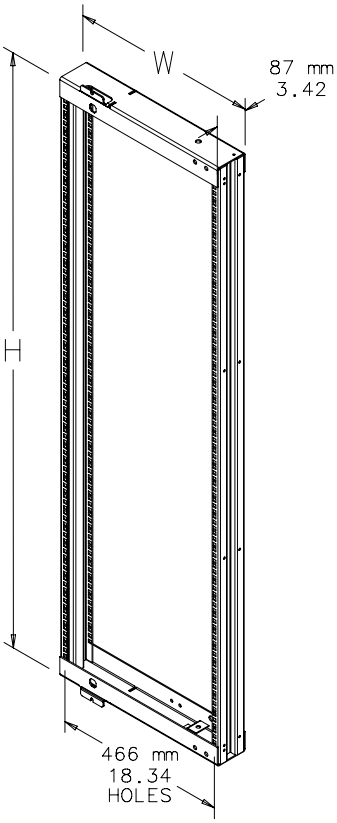

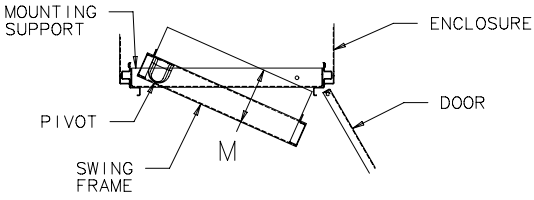

M = Max Installation Depth = 216 mm (8.50 in.)

Maximum Installation Depth for 700 mm Wide Enclosures

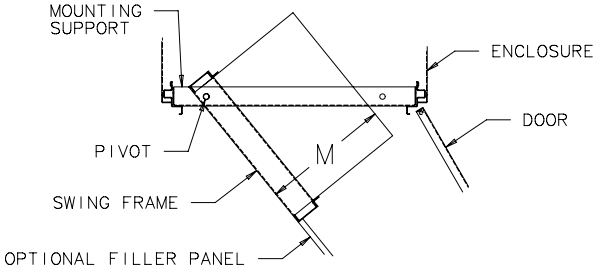

M = Max Installation Depth = 394 mm (15.50 in.)

Maximum Installation Depth for 800 mm Wide Enclosures

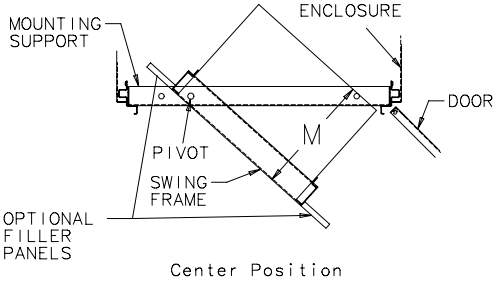

Center Position

M = Max Installation Depth = 394 mm (15.50 in.)

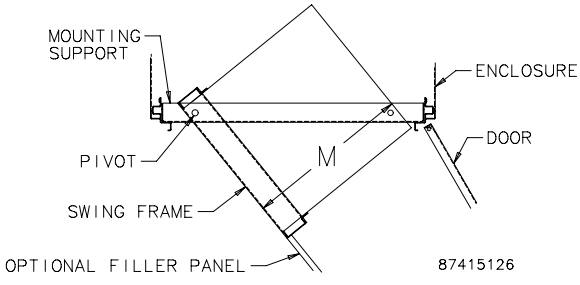

Side Position

M = Max Installation Depth = 514 mm (20.25 in.)

170-DEGREE HINGE KIT

Use this kit in conjunction with the Heavy-Duty Swing-Out Frame. It provides increased accessibility to the back of rack equipment.

BULLETIN: P20

Catalog Number	Fits Cabinets
PSF170K	600, 700 and 800

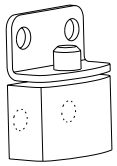

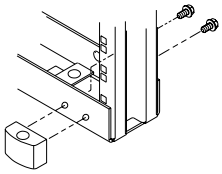

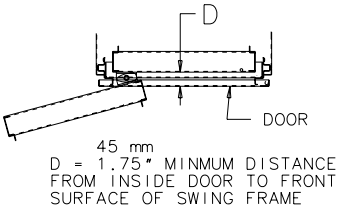

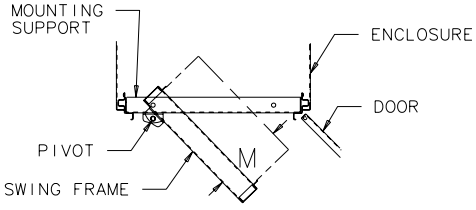

600 WIDE ENCLOSURE

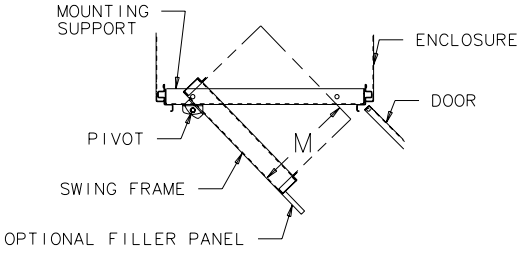

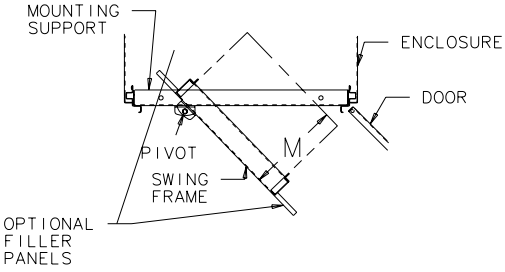

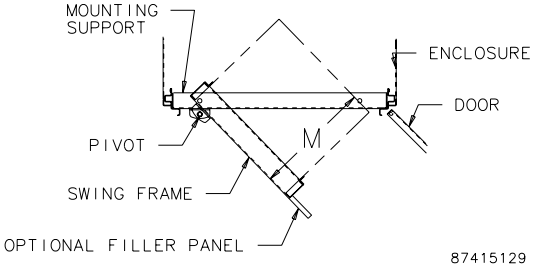

SWING-OUT GUIDES

Guides can be mounted to a Heavy-Duty Swing-Out Rack Frame to provide extra support for rack equipment. Plated steel guides are furnished in pairs with mounting hardware included.

BULLETIN: P20

Catalog Number	Description
PSFG	Swing-Out Guides

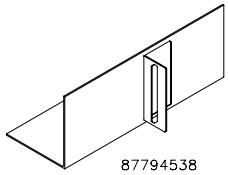

FILLER PANEL KIT

Catalog Number	Swing Frame Height mm	Enclosure Width mm	Mounting
PFPK77LR	700	700	Left or Right
PFPK78C	700	800	Center
PFPK147LR	1400	700	Left or Right
PFPK148C	1400	800	Center
PFPK167LR	1600	700	Left or Right
PFPK168LR	1600	800	Left or Right
PFPK168C	1600	800	Center
PFPK187LR	1800	700	Left or Right
PFPK188LR	1800	800	Left or Right
PFPK188C	1800	800	Center
PFPK208LR	2000	800	Left or Right
PFPK208C	2000	800	Center
PFPK227LR	2200	700	Left or Right
PFPK228LR	2200	800	Left or Right
PFPK228C	2200	800	Center

Used when mounting the ProLine G2 Heavy-Duty Swing-Out Rack Frames in 800-mm wide frames. The Filler Panel occupies the extra space between the frame and the swing frame. Includes a handle and all the hardware for mounting to the Swing-Out Rack Frame.

BULLETIN: P20

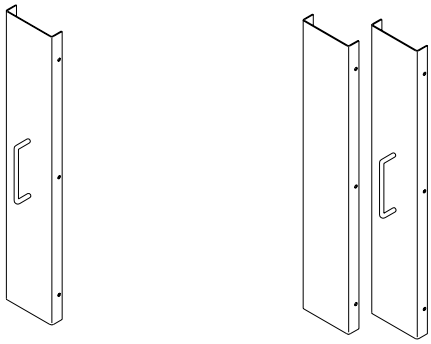

FRAME PULL-OUT SHELF

Frame Pull-Out Shelf allows easy access to shelf-mounted devices. The shelf is 16 gauge steel with 12 gauge steel supports. The entire assembly is finished with RAL 7035 textured gray polyester powder paint. The shelf mounts to the front and rear frame uprights. Load rating is 110 lb. (50 kg).

BULLETIN: P20

Catalog Number	D (mm)	D (in.)	J (mm)	J (in.)	Shelf Extension (mm)	Shelf Extension (in.)
PFSHP66	461	18.15	475	18.70	450	17.72
PFSHP68	661	26.02	475	18.70	670	26.38
PFSHP86	461	18.15	675	26.58	450	17.72
PFSHP88	661	26.02	675	26.58	670	26.38

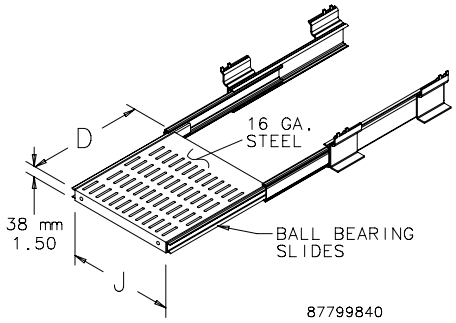

FRAME SHELF

Vented Frame Shelf mounts to the vertical hole pattern on a frame and provides a stationary surface for equipment. The shelf is 16 gauge steel finished with RAL 7035 textured gray polyester powder paint.

BULLETIN: P20

Catalog Number	D (mm)	D (in.)	W (mm)	W (in.)
PFSH64	300	11.81	548	21.57
PFSH65	400	15.75	548	21.57
PFSH66	500	19.68	548	21.57
PFSH68	700	27.56	548	21.57
PFSH69	800	31.50	548	21.57

Catalog Number	D (mm)	D (in.)	W (mm)	W (in.)
PFSH75	400	15.75	648	25.51
PFSH76	500	19.68	648	25.51
PFSH78	700	27.56	648	25.51
PFSH84	300	11.81	748	29.45
PFSH85	400	15.75	748	29.45
PFSH86	500	19.68	748	29.45
PFSH88	700	27.56	748	29.45
PFSH89	800	31.50	748	29.45
PFSH104	300	11.81	948	37.32
PFSH105	400	15.75	948	37.32
PFSH106	500	19.68	948	37.32
PFSH108	700	27.56	948	37.32

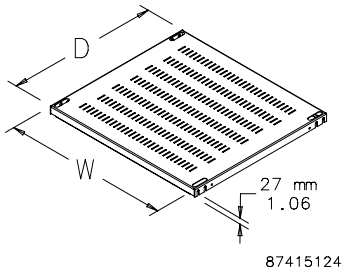

PRINTER SHELF

The Printer Shelf is used for supporting a continuous feed printer. The shelf mounts directly to a PROLINE frame. Paper shelves are vertically adjustable. The entire unit slides out 17 in. from the enclosure, allowing easy accessibility. Fits 600- or 800-mm wide frames that are 600-mm or more deep.

BULLETIN: P20

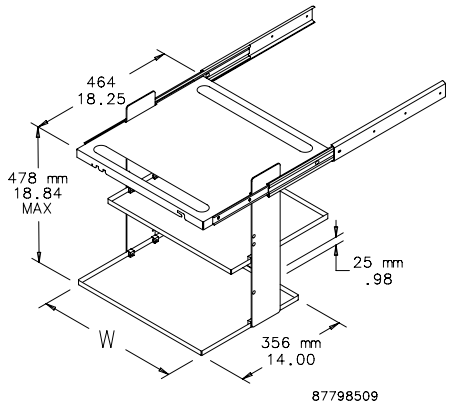

Catalog Number	Fits (mm)	W (mm)	W (in.)
PPSH66	600 x 600 or 600 x 800	464	18.27
PPSH86	800 x 600 or 800 x 800	663	26.10

PPSH66 can be installed with paper slots positioned front and back or right and left.

Grid straps are required when mounting printer shelf in frames deeper than 600 mm.

DOOR-ACTIVATED LIGHT SWITCH KIT

Door-activated switch mounts to the frame and includes mounting hardware. Mounting plate is 14 gauge steel with a plated finish.

BULLETIN: P20

Catalog Number	Description
PLFSWD	Door-activated light switch kit

19-IN. RACK ANGLES

19-in. U-Shaped Rack Angles are available in square-hole and tapped-hole designs. Tapped Rack Angles are 12 gauge plated steel with 10-32 tapped holes. Square-Hole Rack Angles are 14 gauge plated steel designed to accept metric or English cage nuts. 19-in. Rack Angles are fixed directly into a 600-mm wide enclosure frame. To mount 19-in. Rack Angles in 700- or 800-mm wide frames, use
Frame Reducing Brackets.

BULLETIN: P20

Catalog Number	Hole	H (mm)	H (in.)	Fits Frame	Rack Units
PRA197TH	Square	578	22.77	700 mm	13
PRA197TP	Tapped	578	22.77	700 mm	13
PRA198TH	Square	712	28.02	800 mm	16
PRA198TP	Tapped	712	28.02	800 mm	16
PRA1914TH	Square	1290	50.77	1400 mm	29
PRA1914TP	Tapped	1290	50.77	1400 mm	29
PRA1916TH	Square	1467	57.77	1600 mm	33
PRA1916TP	Tapped	1467	57.77	1600 mm	33
PRA1918TH	Square	1690	66.52	1800 mm	38
PRA1918TP	Tapped	1690	66.52	1800 mm	38
PRA1920TH	Square	1867	73.52	2000 mm	42
PRA1920TP	Tapped	1867	73.52	2000 mm	42
PRA1922TH	Square	2090	82.27	2200 mm	47
PRA1922TP	Tapped	2090	82.27	2200 mm	47

Vertical holes spaced in 1.75-in. (44.5-mm) increments.

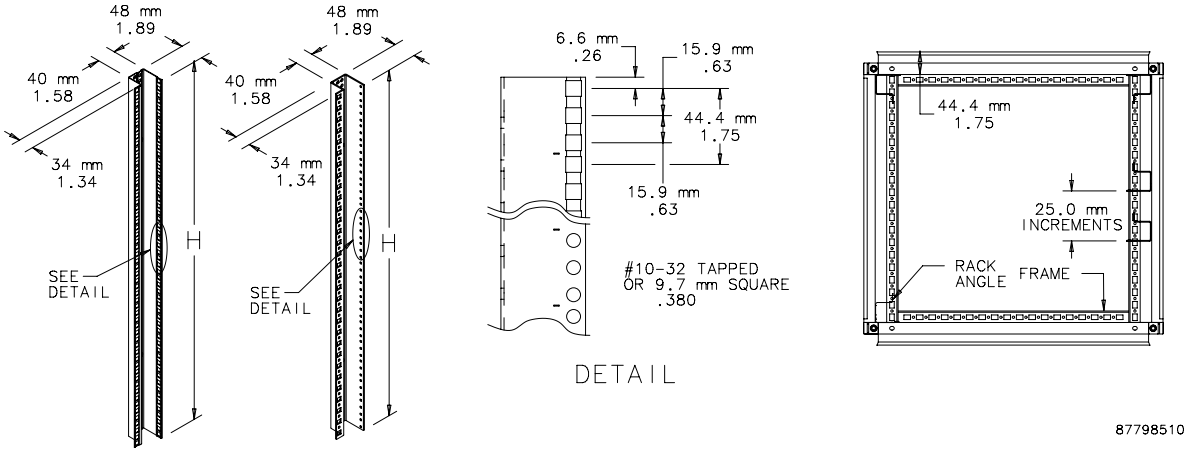

23-IN. RACK ANGLES

23-in. Rack Angles are available for telecom applications. They fit directly into 700-mm wide frames or into 800-mm wide frames using Frame Reducing Brackets. Rack Angles are 12 gauge steel with 10-32 tapped holes. 23-in. Rack Angles are available with 1.00-in. vertical hole spacing.

BULLETIN: P20

Catalog Number	Hole	Height mm/in.	Fits Frame Height	Rack Units
PRA237TP	Tapped	584 22.99	700 mm or taller	13
PRA2314TP	Tapped	1270 50.00	1400 mm or taller	29
PRA2316TP	Tapped	1473 57.99	1600 mm or taller	33
PRA2318TP	Tapped	1676 65.98	1800 mm or taller	38
PRA2320TP	Tapped	1879 73.98	2000 mm	42

Vertical holes spaced in 1.00 in. (25.4mm) increments.

24-IN. RACK ANGLES

24-in. Rack Angles are available in both square-hole and tapped-hole designs. Tapped Rack Angles are 12 gauge plated steel with 10-32 tapped holes. Square-Hole Rack Angles are 14 gauge plated steel designed to accept metric or English cage nuts. 24-in. Rack Angles fit directly into 700- or 800-mm wide frames using Frame Reducing Brackets.

BULLETIN: P20

Catalog Number	Hole	H (mm)	H (in.)	Fits Frame	Rack Units
PRA247TH	Square	578	22.77	700 mm	13
PRA247TP	Tapped	578	22.77	700 mm	13
PRA2414TH	Square	1245	49.02	1400 mm	29
PRA2414TP	Tapped	1245	49.02	1400 mm	29
PRA2416TH	Square	1467	57.77	1600 mm	33
PRA2416TP	Tapped	1467	57.77	1600 mm	33
PRA2418TH	Square	1690	66.52	1800 mm	38
PRA2418TP	Tapped	1690	66.52	1800 mm	38
PRA2420TH	Square	1867	73.52	2000 mm	42
PRA2420TP	Tapped	1867	73.52	2000 mm	42
PRA2422TH	Square	2090	82.27	2200 mm	47
PRA2422TP	Tapped	2090	82.27	2200 mm	47

Vertical holes spaced in 1.75-in. (44.5-mm) increments.

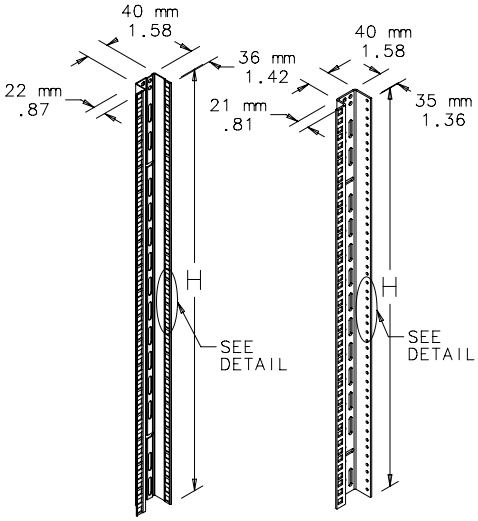

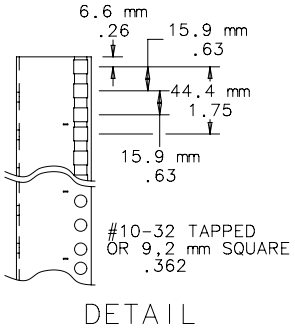

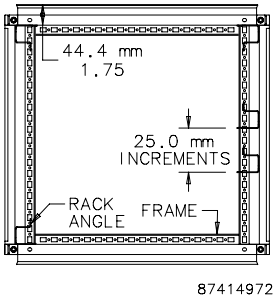

METRIC RACK ANGLES

Metric U-Shaped Rack Angles are available with square holes spaced vertically in 25-mm increments to accept metric or English cage nuts. These Rack Angles are built in accordance with standard IEC 917-2-1 to accommodate metric subracks. They are sized to fit directly into 600-mm wide frames. Use Frame Reducing Brackets to mount in 700- or 800-mm wide frames.

BULLETIN: P20

Catalog Number	H (mm)	H (in.)	Fits Frame Height	Rack Units
PRAM7	575	22.64	700 mm	22
PRAM14	1275	50.20	1400 mm	29
PRAM16	1475	58.07	1600 mm	33
PRAM18	1675	65.94	1800 mm	38
PRAM20	1875	73.82	2000 mm	42
PRAM22	2075	81.69	2200 mm	47

Vertical holes spaced in 25-mm increments.

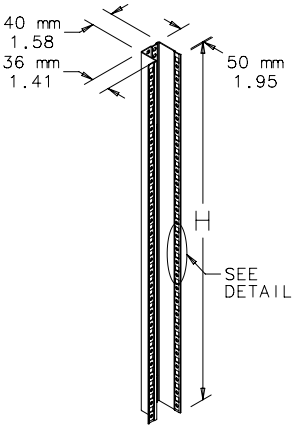

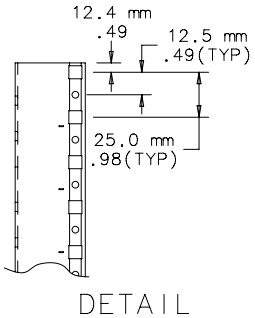

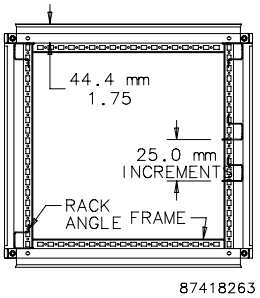

RACK ANGLE ADAPTER BRACKET

Rack Angle Adapter Brackets mount to PROLINE and PROLINE G2 Rack Angles. They bring out the rear leg mounting surface to allow traditional Rack Mount Slides (A16SL2U, sold separately) to be used. Fits tapped or through-hole PROLINE and PROLINE G2 Rack Angles. Rack Angle Adapter Brackets come in a quantity of four and are 14 gauge steel. They have a plated finish.

BULLETIN: P20

Catalog Number	Gauge	Use With
PBRAA	14	Rack-Mount Slides A16SL2U

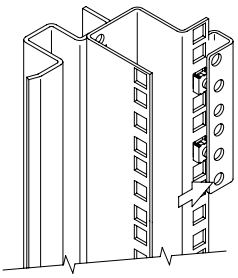

FRAME ACCESSORY BRACKET

Frame Accessory Brackets mount directly to the PROLINE frame and are used in place of rack angles to mount rack accessories such as shelves and pull-out shelves. Frame Accessory Brackets are furnished in sets of four and are 14 gauge plated steel. Mounting hardware is included.

BULLETIN: P20

Catalog Number	Description	D (mm)	D (in.)
PFB19	19-in. EIA spacing	36	1.42
PFB23	23-in. EIA spacing	36	1.42
PFB24	24-in. EIA spacing	22	0.87
PFBM	Metric IEC 91721 spacing	36	1.42

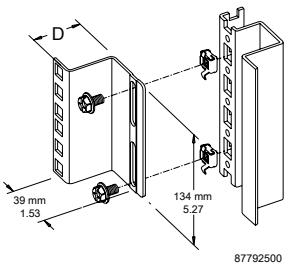

RACK PANELS

Rack Panels mount to rack angles and can be used for mounting components or as a blanking plate. They are available in aluminum and painted steel. Aluminum Rack Panels are .125-in.-thick 5052-H32 alloy. Steel Rack Panels are 12 gauge steel and finished in RAL 7035 textured light-gray polyester powder paint. All panels are flat with oblong holes positioned at EIA standard spacing. Mounting hardware is sold separately. The recommended fastener package kit is ECNSM6.

BULLETIN: DACCY, P20

Catalog Number	Material	Rack Angle Size (in.)	Rack Units
P19RP1UA	Aluminum	19	1
P19RP1UP	Steel	19	1
P19RP2UA	Aluminum	19	2
P19RP2UP	Steel	19	2
P19RP3UA	Aluminum	19	3
P19RP3UP	Steel	19	3
P19RP4UA	Aluminum	19	4
P19RP4UP	Steel	19	4
P19RP5UA	Aluminum	19	5
P19RP5UP	Steel	19	5
P19RP6UP	Steel	19	6
P19RP6UA	Aluminum	19	6
P19RP7UA	Aluminum	19	7
P19RP7UP	Steel	19	7
P19RP8UA	Aluminum	19	8
P19RP8UP	Steel	19	8
P19RP9UA	Aluminum	19	9
P19RP9UP	Steel	19	9
P19RP10UA	Aluminum	19	10
P19RP10UP	Steel	19	10
P19RP11UA	Aluminum	19	11
P19RP11UP	Steel	19	11
P19RP12UA	Aluminum	19	12
P19RP12UP	Steel	19	12
P19RP16UA	Aluminum	19	16
P19RP16UP	Steel	19	16

Fastener Package

Catalog Number	Description
ECNSM6	Fastener Package, M6. Includes 8 cage nuts and screws.

ADJUSTABLE RACK-MOUNTING RAILS

Mounting rails allow rack angles to be positioned anywhere within the PROLINE frame. The left-to-right adjustment pertains only when the enclosure is wider than the minimum width required for rack angles. Includes two right-hand and two left-hand 12 gauge plated or painted steel mounting rails. Mounting hardware is included.

BULLETIN: DPY, P20

Catalog Number	L (mm)	L (in.)	Fits Frame Depth	Finish
PBARA6	511	20.11	600	Plated
PBARA8	711	27.98	800	Plated
PBARA9	811	31.92	900	Plated
PBARA9B	811	31.92	900	Painted RAL 9005 Black
PBARA10B	911	35.86	1000	Painted RAL 9005 Black
PBARA11B	1011	39.79	1100	Painted RAL 9005 Black
PBARA12B	1111	43.73	1200	Painted RAL 9005 Black

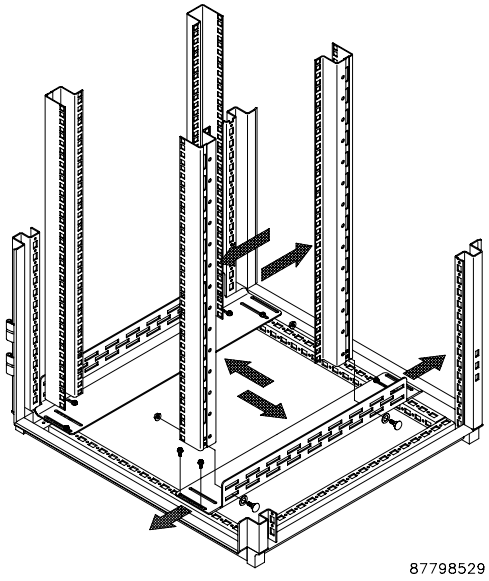

FRAME-REDUCING BRACKETS FOR FRAMES OR GRID STRAPS

Frame-Reducing Brackets mount directly to 700- or 800-mm wide PROLINE frames or to grid straps. Converts wider frames to 600-mm wide, allowing 19-in. rack angles to fit, or to 700-mm wide, allowing 23-in. rack angles to fit. Can be used to left- or right-justify the rack-mounted equipment. Furnished in sets of four. 14 gauge plated steel. Mounting hardware is included.

BULLETIN: P20

Catalog Number	Reduces Frame Width	W (mm)	W (in.)	Converts Frame Width
PRB50	50	50	1.97	From 700 to 600 From 800 to 700 mm
PRB100	100	100	3.94	From 800 to 600 From 800 to 700 From 700 to 600 mm
PRB200	200	200	7.87	From 1000 to 600 From 1000 to 800 From 800 to 600 mm

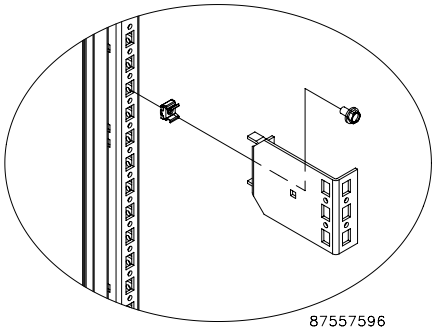

SLIDES

Heavy-duty ball bearing, plated, three-section Slides are 16-in. (406-mm) long and allow 17-in. (423-mm) extension. They are attached to supports that mount between two pairs of rack-mounting angles that have accessory mounting legs. Mounting hardware is furnished. Equipment 16.75-in. (425-mm) wide can be mounted between Slide assemblies installed on 19-in. rack angles. A pair of Slides can support up to 160 lb. (73 kg) at the extended position when load is distributed evenly along the 16-in. (406-mm) Slide length. Requires Rack Angle Adapter Bracket to fit PROLINE. ***Needs to be used with the Rack Angle Adapter Bracket (PBRAA, PBRAA19 or PBRAA24).***

BULLETIN: P20

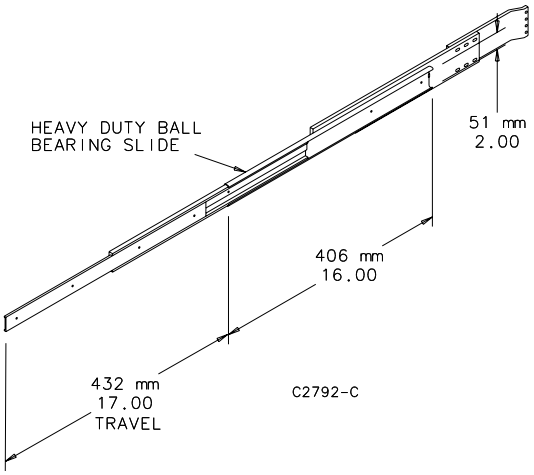

Catalog Number	Quantity
A16SL2U	2

RACK-ANGLE MOUNTED DRAWER

Steel drawer for 19-in. rack-angle mounting. Mounts to the front surface of the rack angles. Integral steel box contains the drawer and protects surrounding internal equipment. Extends 13 in. (330 mm) on ball bearing slides. Front includes handle and key lock. Finish is RAL 7035 textured light-gray polyester powder paint. Mounting hardware is included.

BULLETIN: P20

Catalog Number	H (mm)	H (in.)	Fits Rack Width	Rack Units
P19DR1US	43	1.69	19 in.	1
P19DR2US	88	3.47	19 in.	2
P19DR3US	132	5.20	19 in.	3

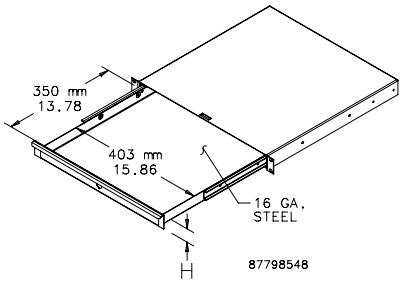

WRITING SURFACE

A 16-gauge steel cover mounts on top of the drawer to serve as a writing surface and drawer cover. Finish is RAL 7035 textured light-gray polyester powder paint.

BULLETIN: P20
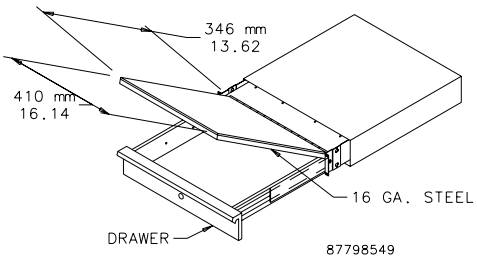
Catalog Number	Fits
P19WS	Drawer