PROLINE G2

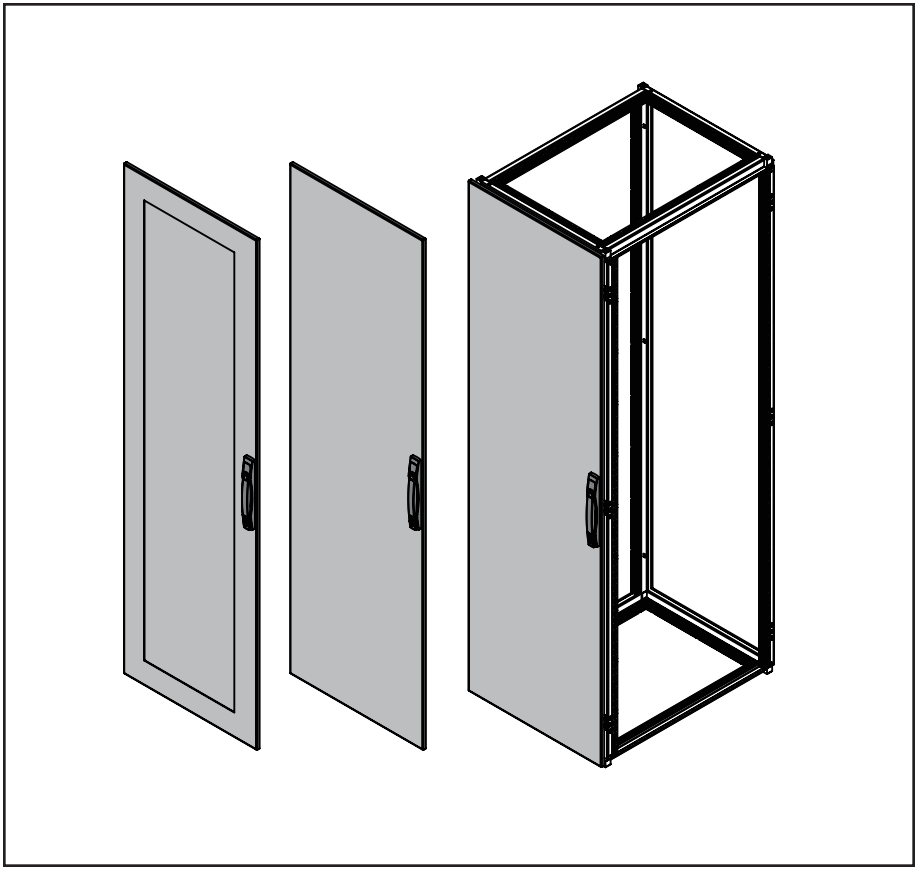

© 2018 Hoffman Enclosures Inc.
PH 763 422 2211 • nVent.com/HOFFMAN
P/N 89127509 89127516

1 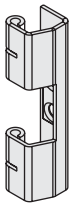 (3x)	2 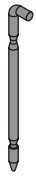 (3x)	3 (3x)
4 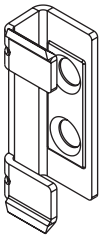 (3x)	5 M6X16 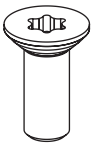 (6x)	6 (3x)
7 (1x)		

© 2018 Hoffman Enclosures Inc.

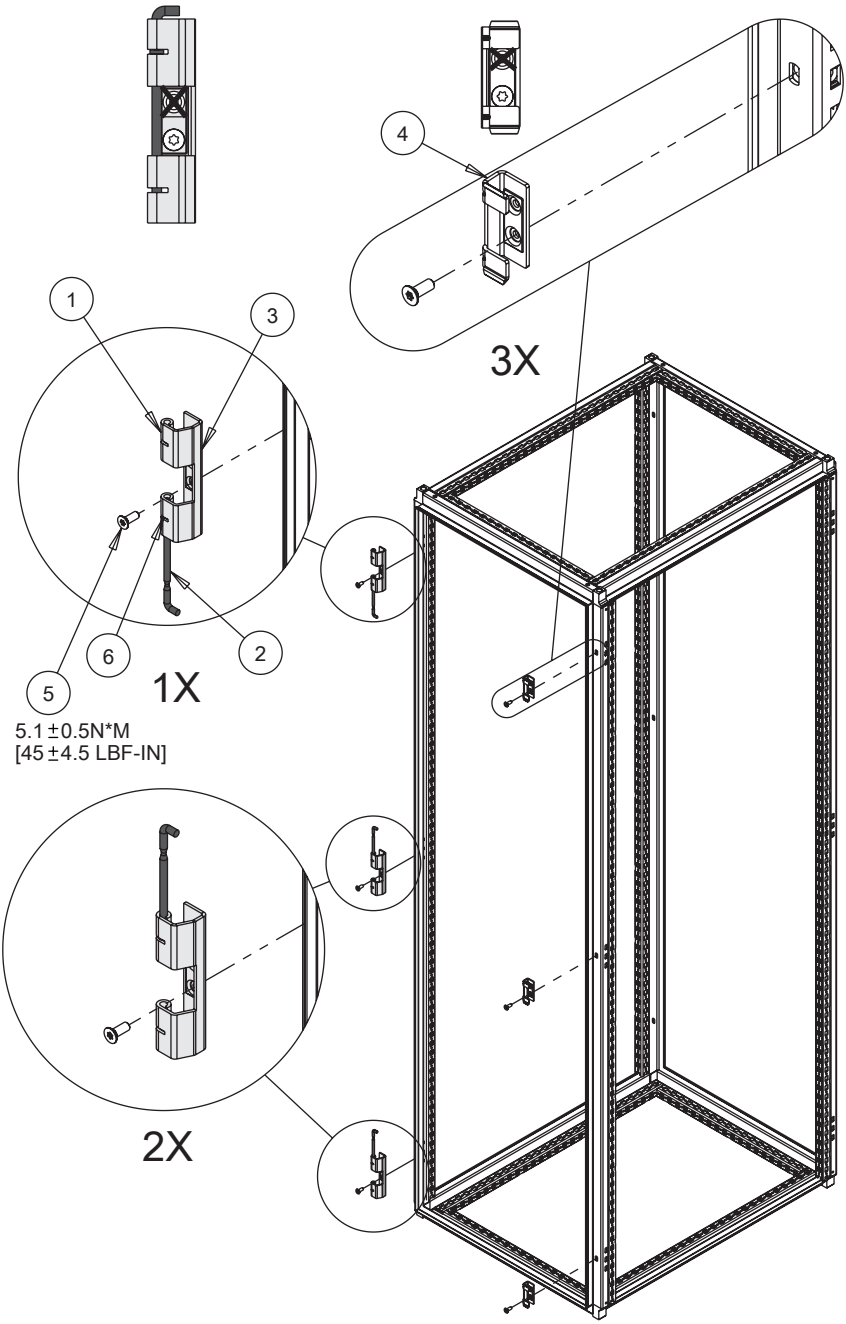

1

© 2018 Hoffman Enclosures Inc.

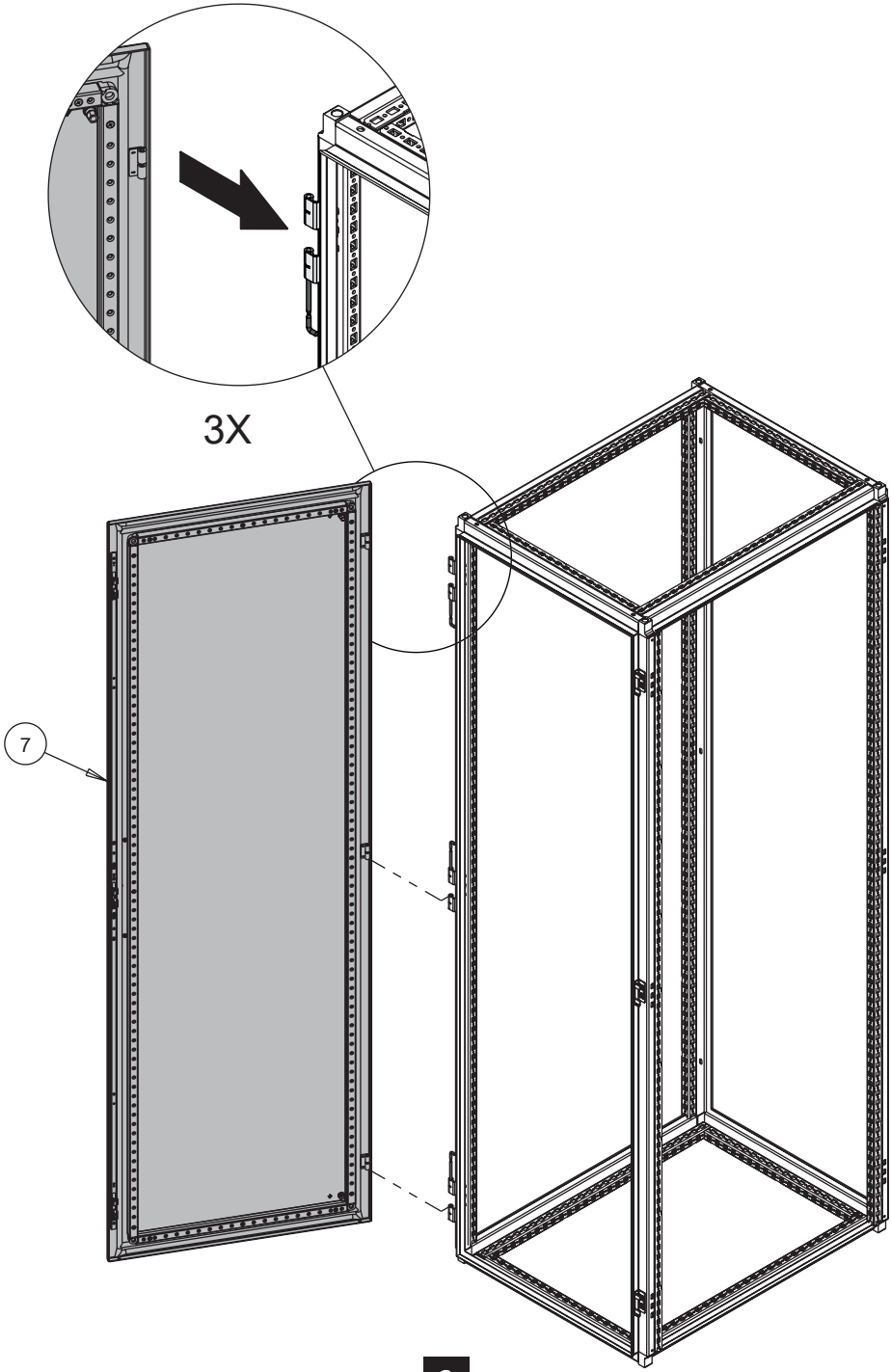

2

© 2018 Hoffman Enclosures Inc.

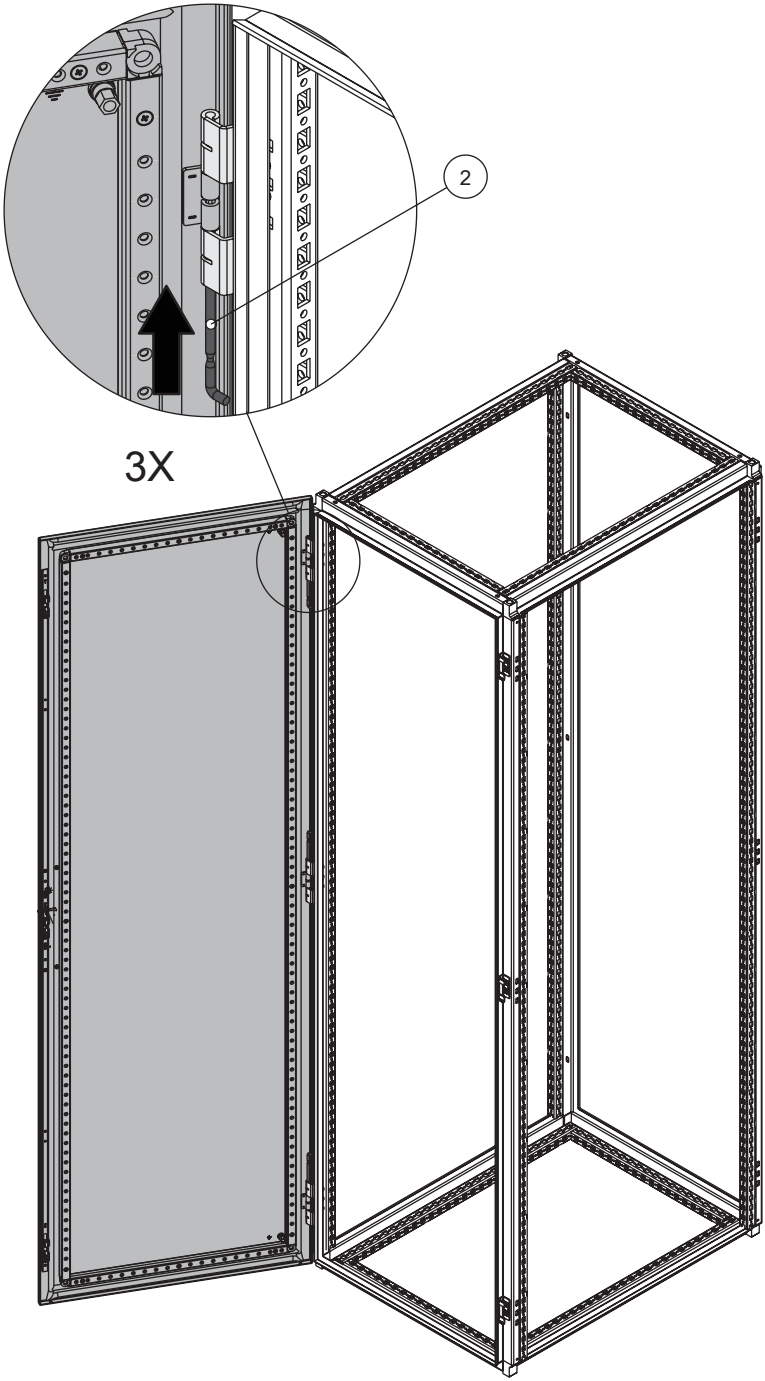

3

© 2018 Hoffman Enclosures Inc.

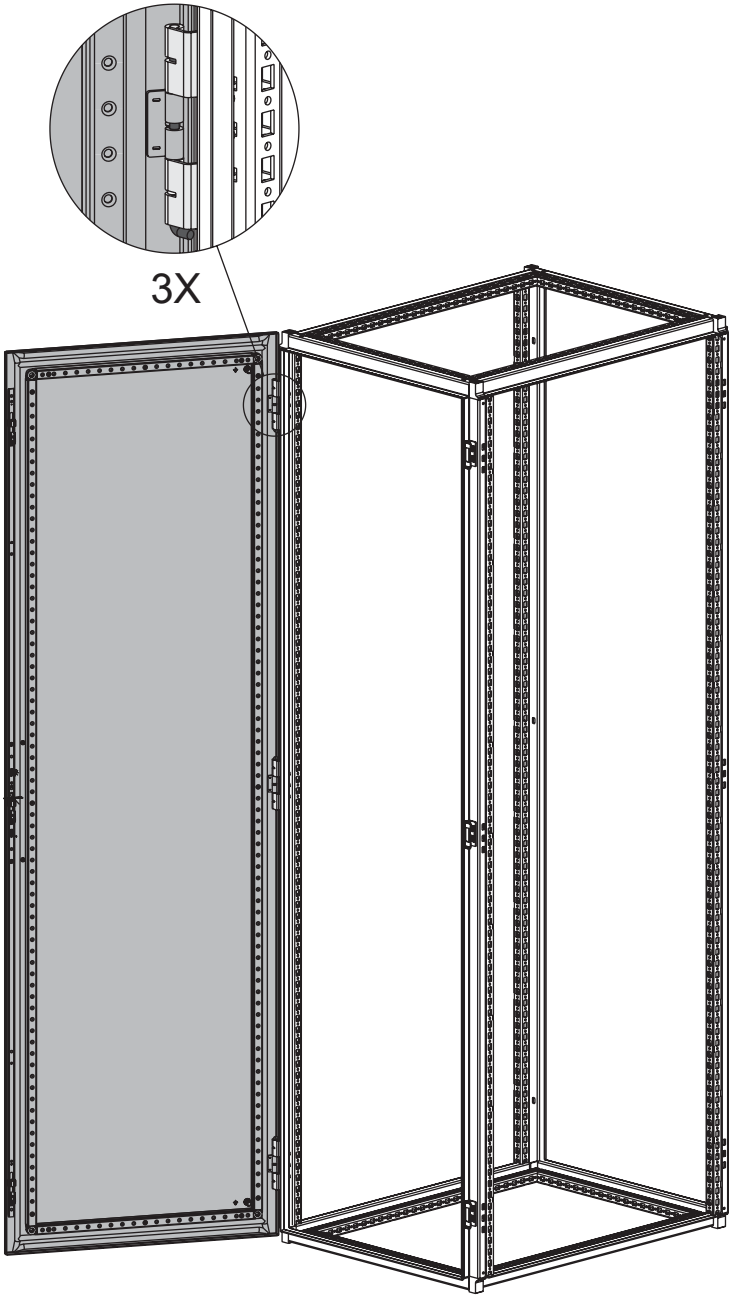

4

© 2018 Hoffman Enclosures Inc.

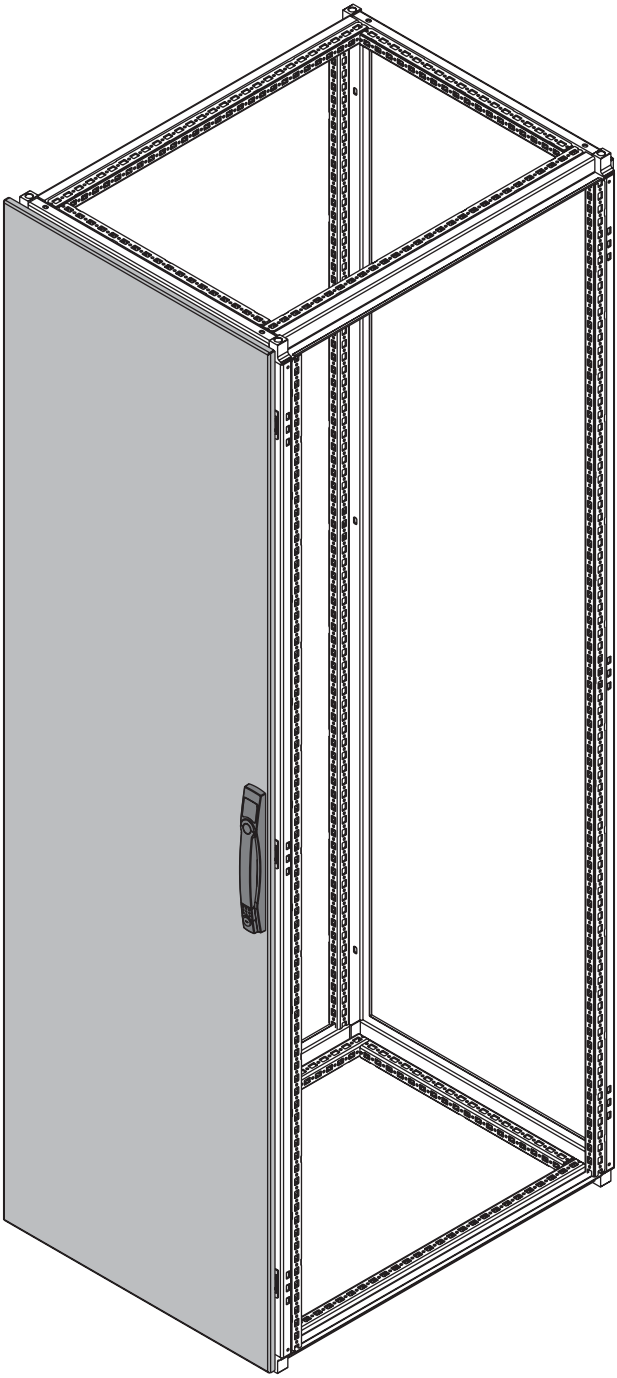

5

© 2018 Hoffman Enclosures Inc.

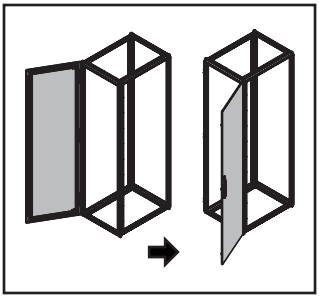

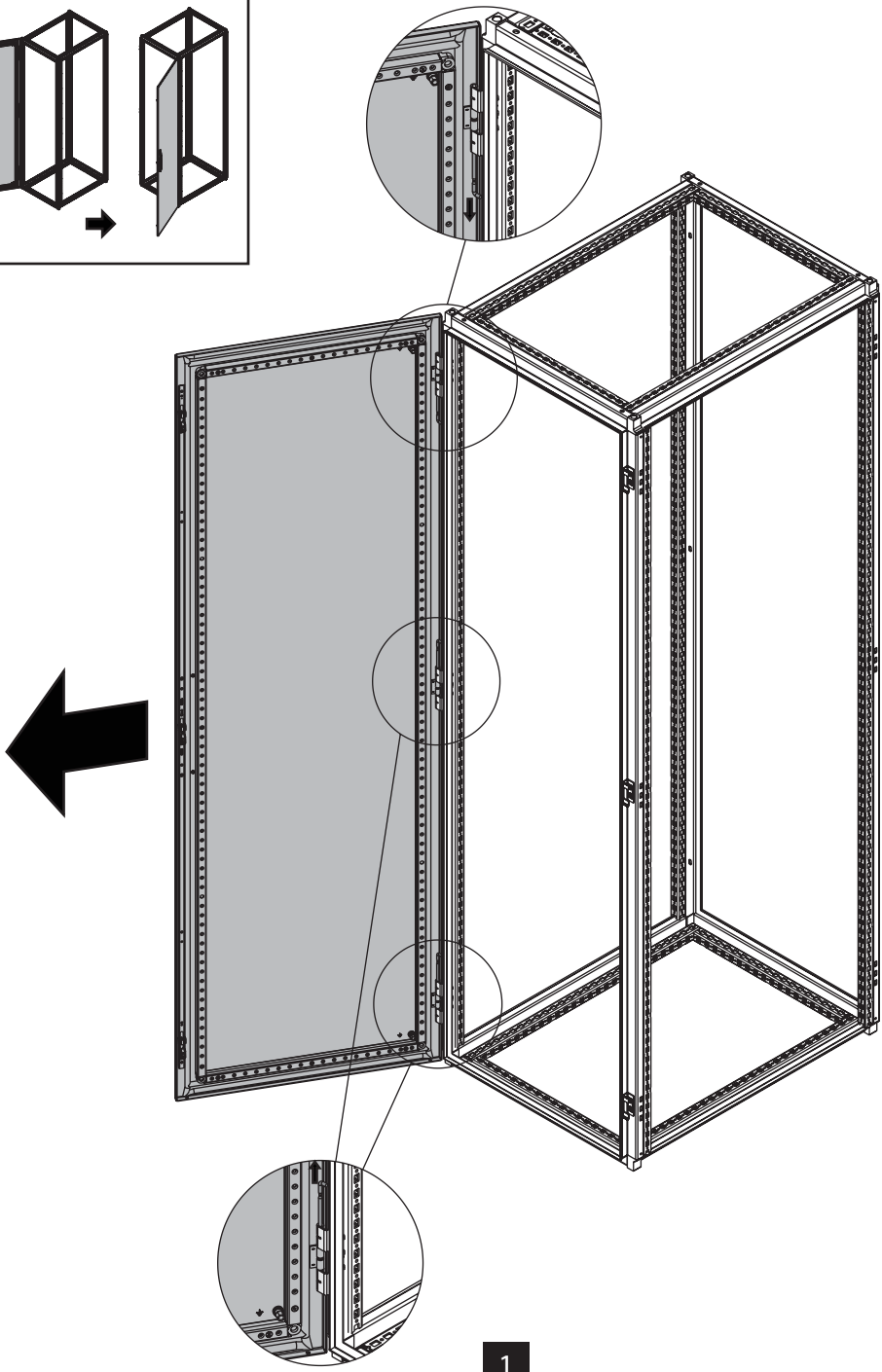

1

© 2018 Hoffman Enclosures Inc.

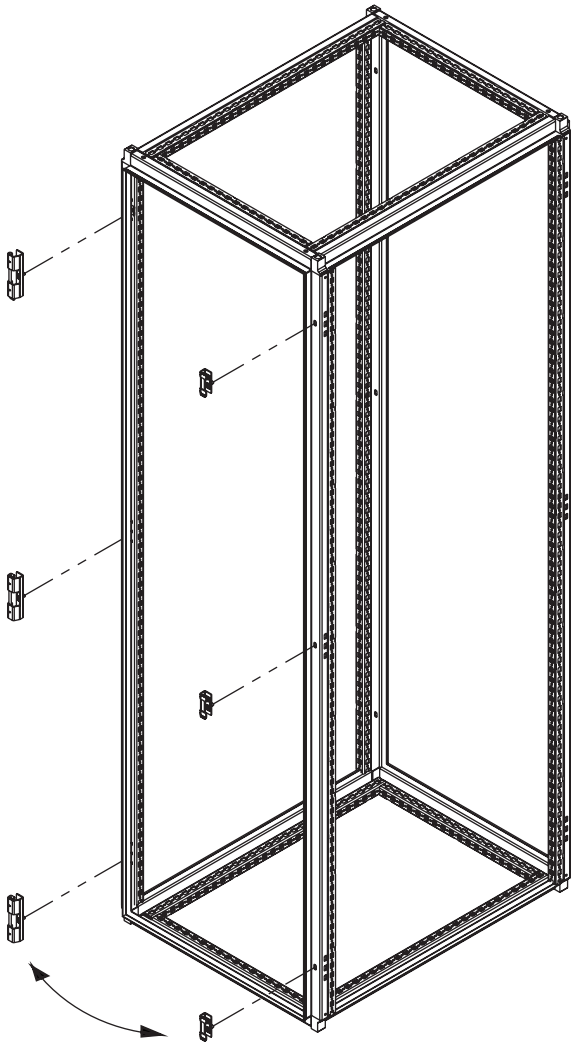

2

© 2018 Hoffman Enclosures Inc.

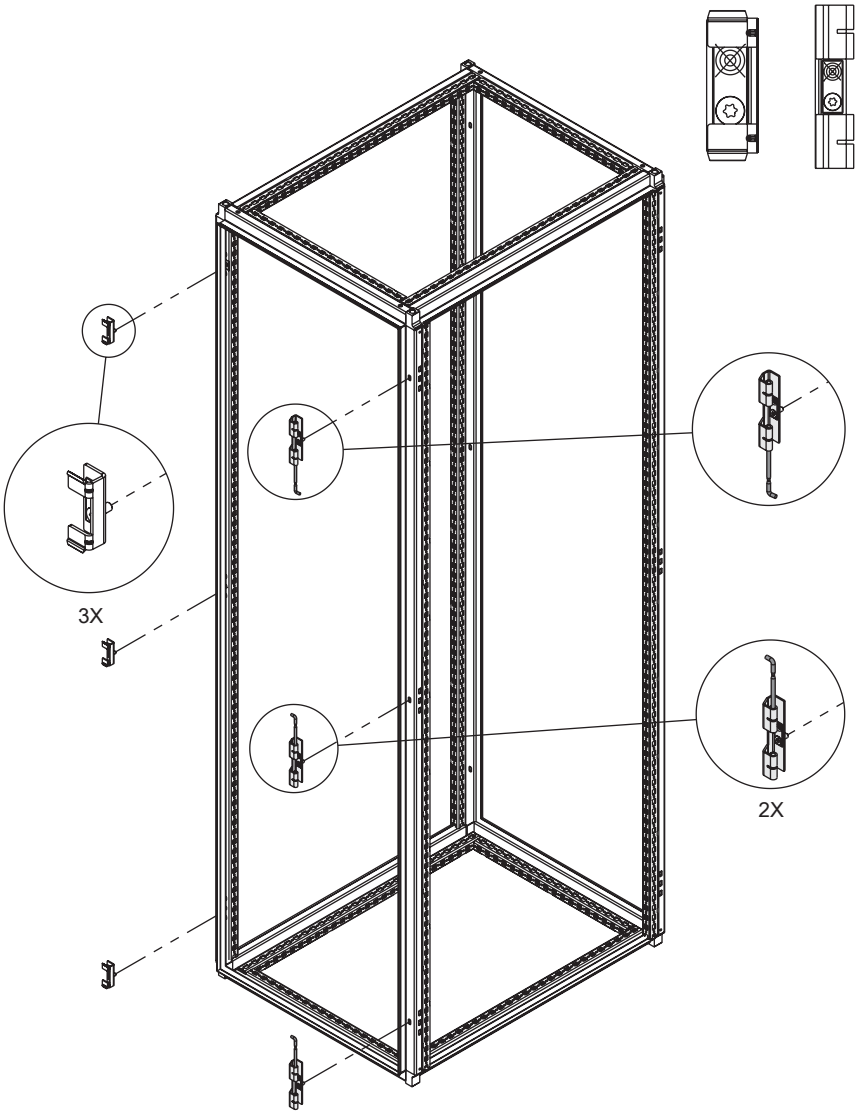

3

© 2018 Hoffman Enclosures Inc.

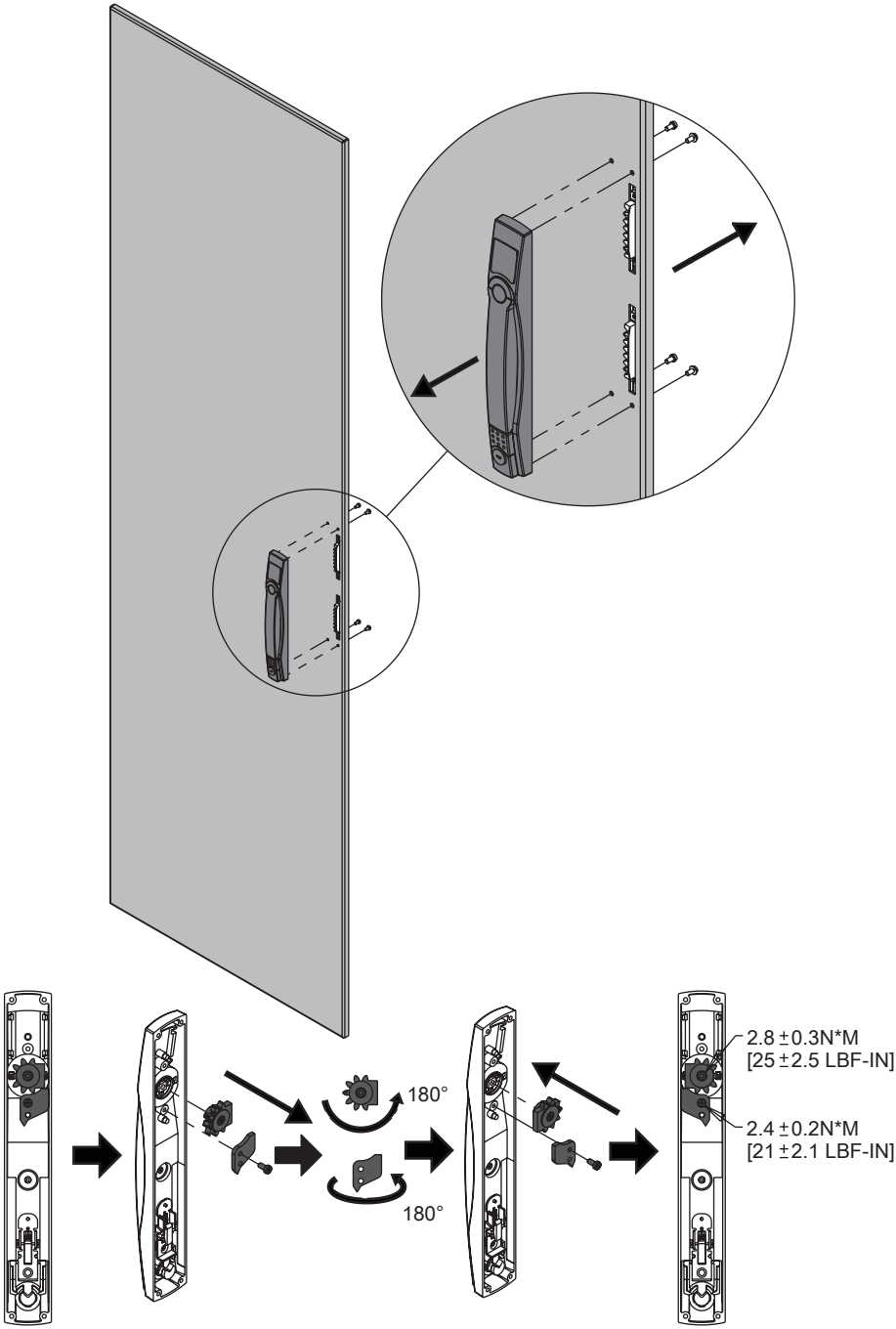

4

© 2018 Hoffman Enclosures Inc.

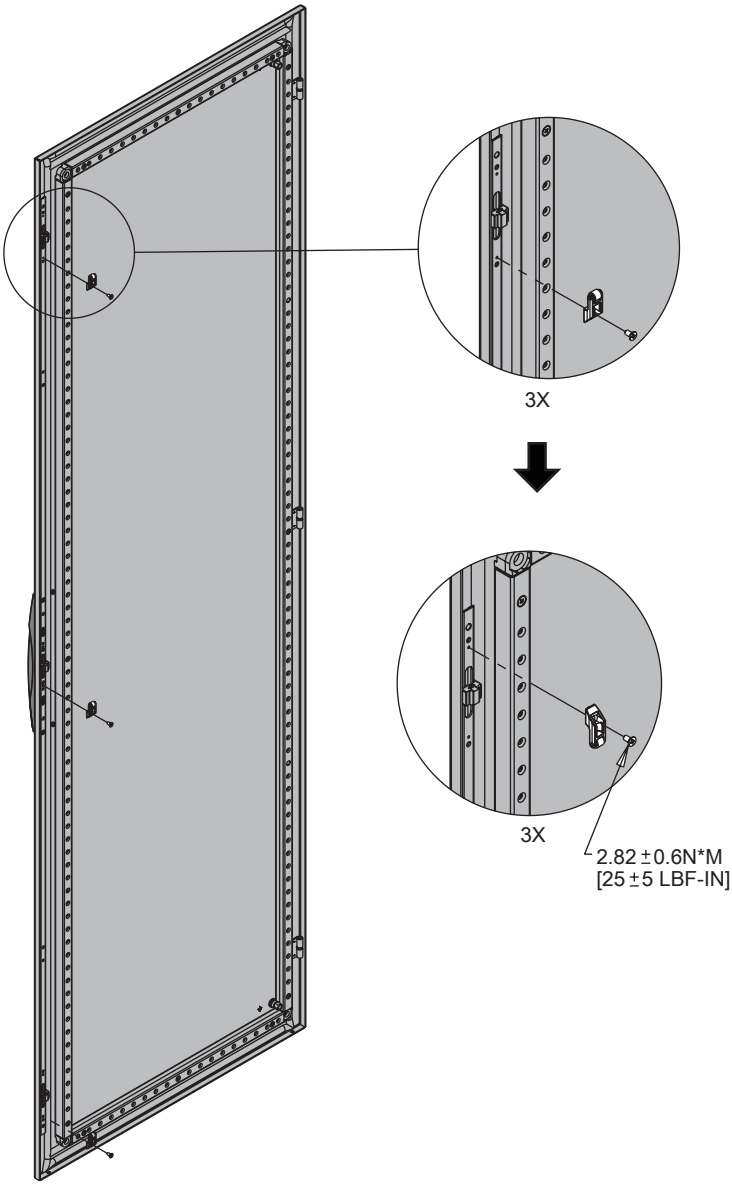

5

© 2018 Hoffman Enclosures Inc.

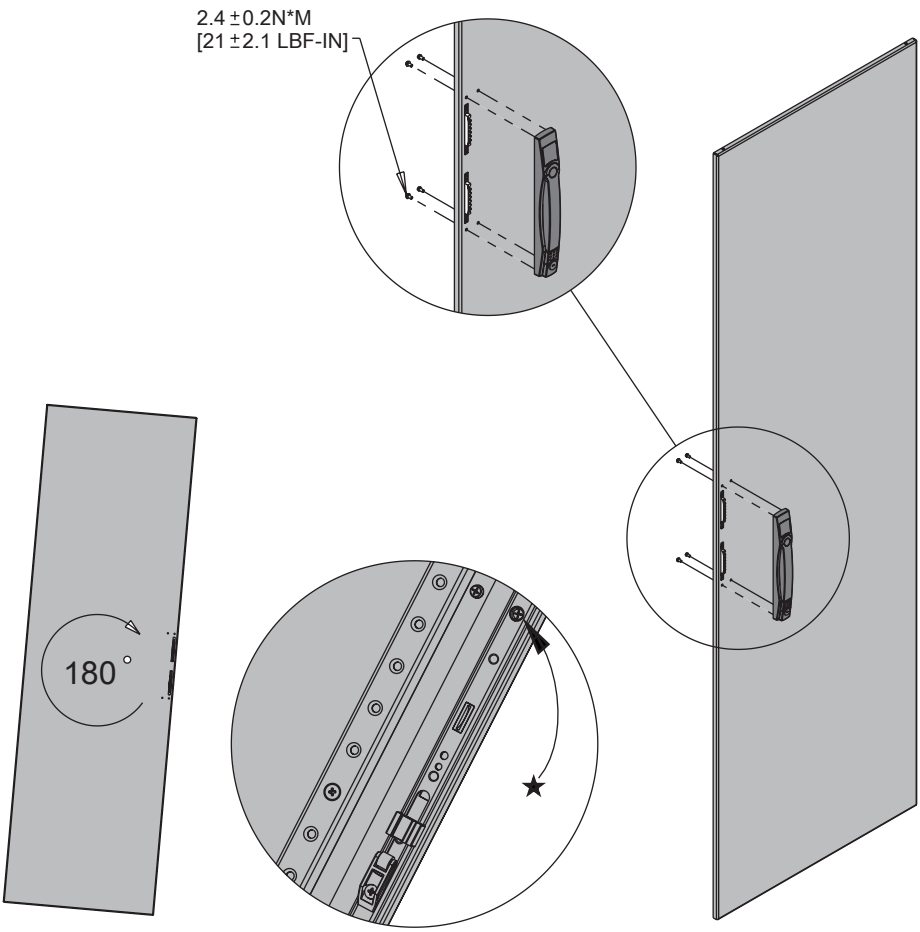

6

© 2018 Hoffman Enclosures Inc.

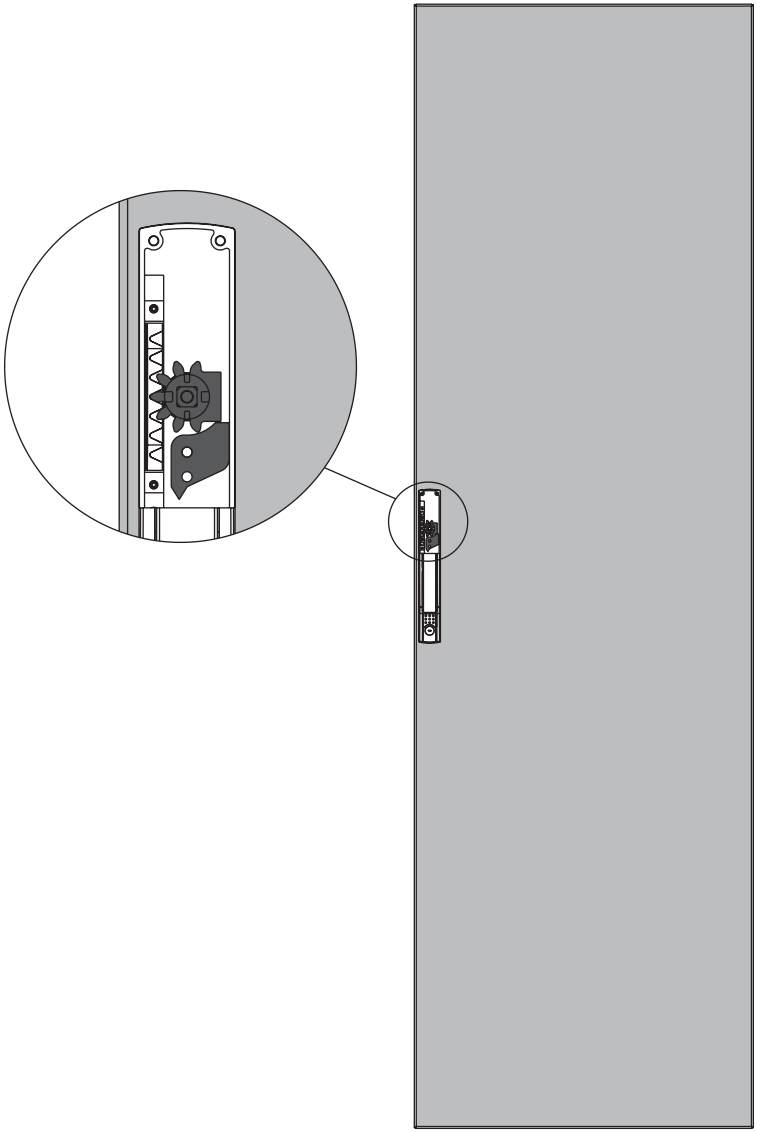

7

© 2018 Hoffman Enclosures Inc.

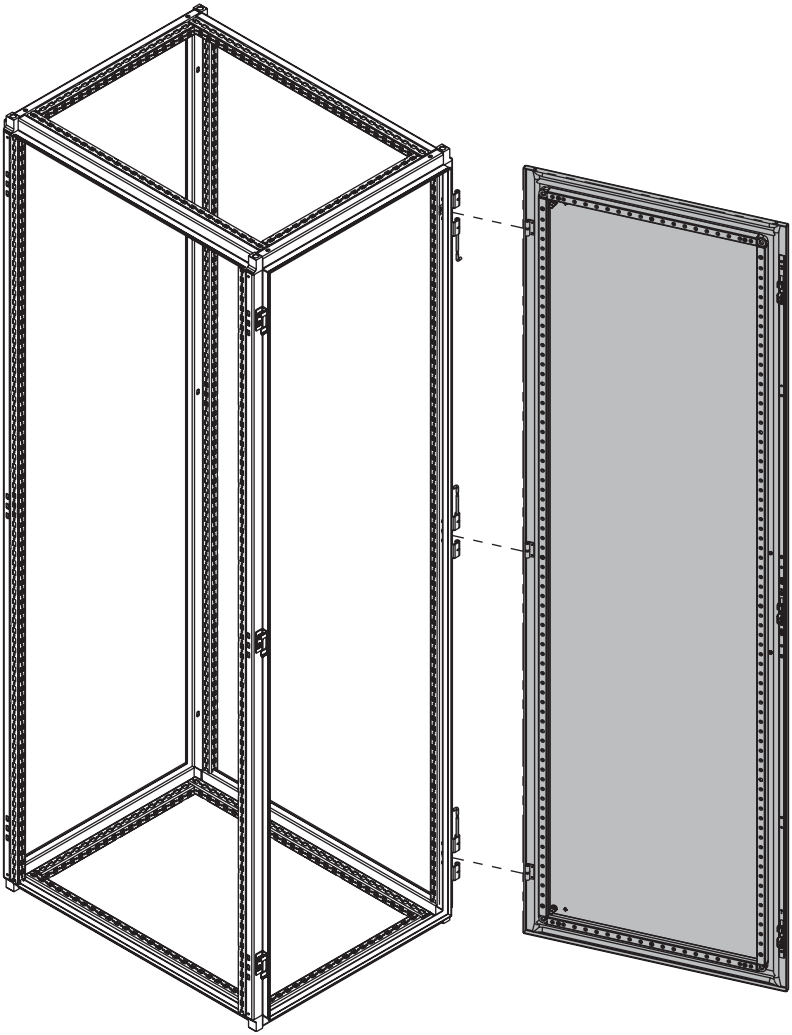

8

© 2018 Hoffman Enclosures Inc.

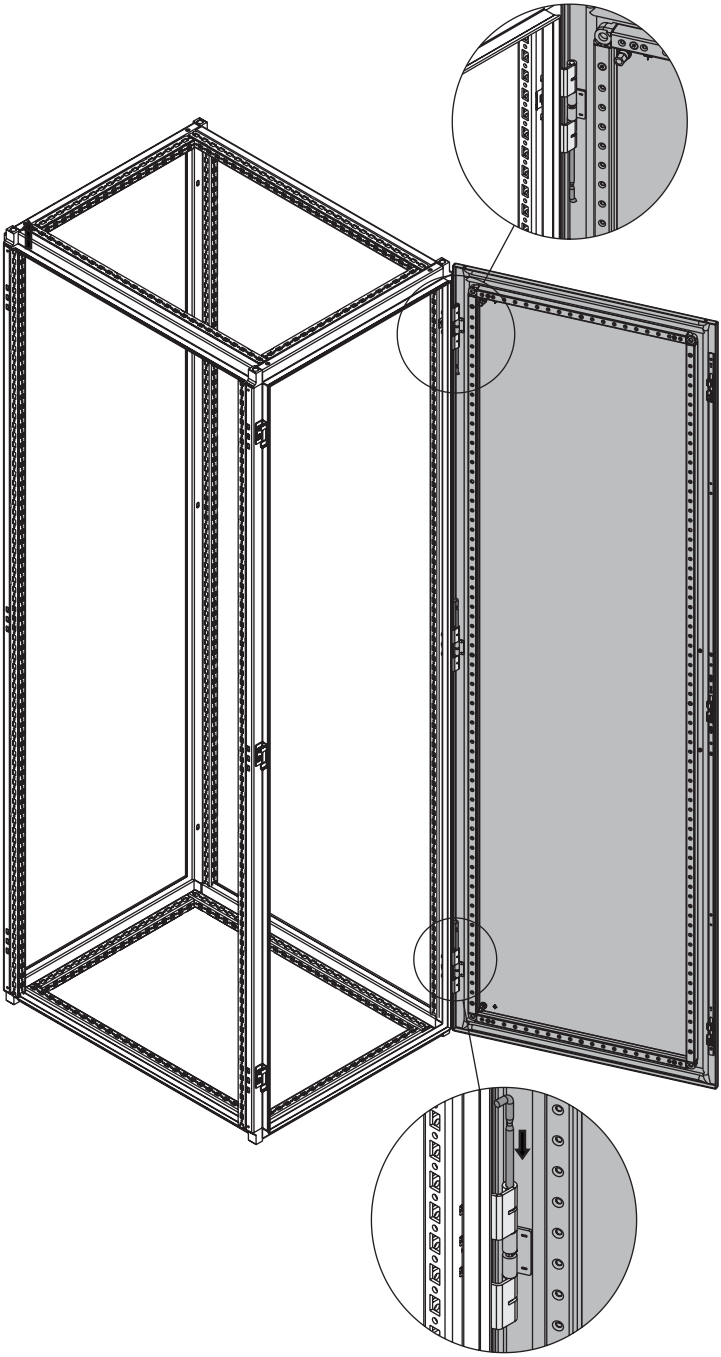

9

© 2018 Hoffman Enclosures Inc.