CONCEPT

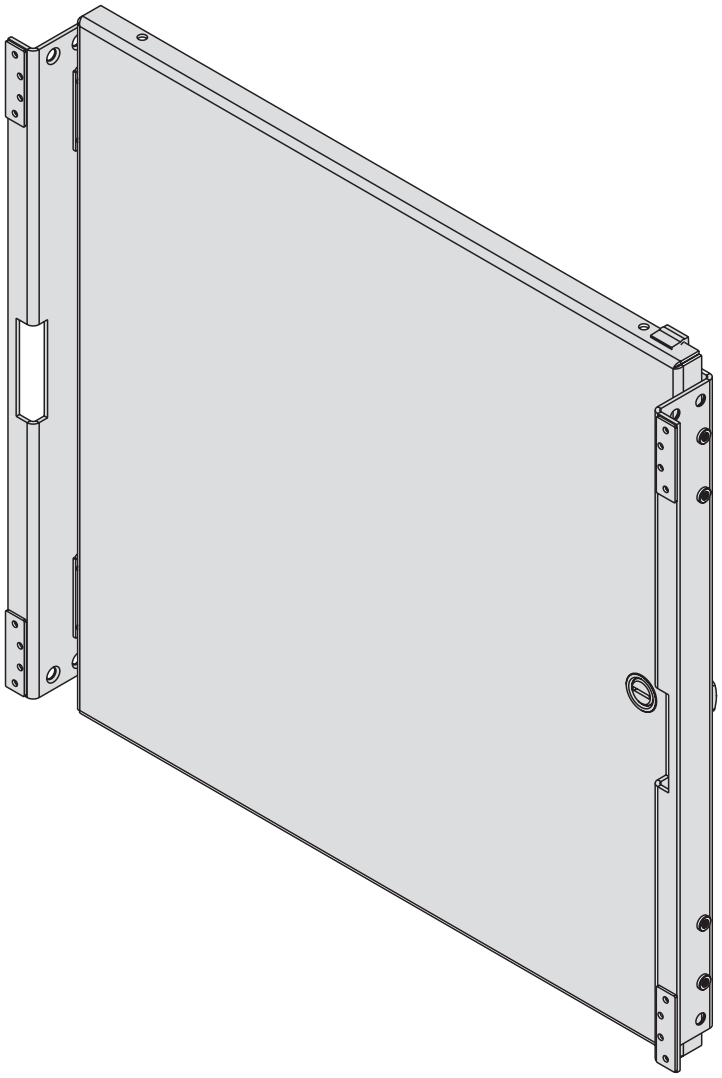

© 2018 Hoffman Enclosures Inc.

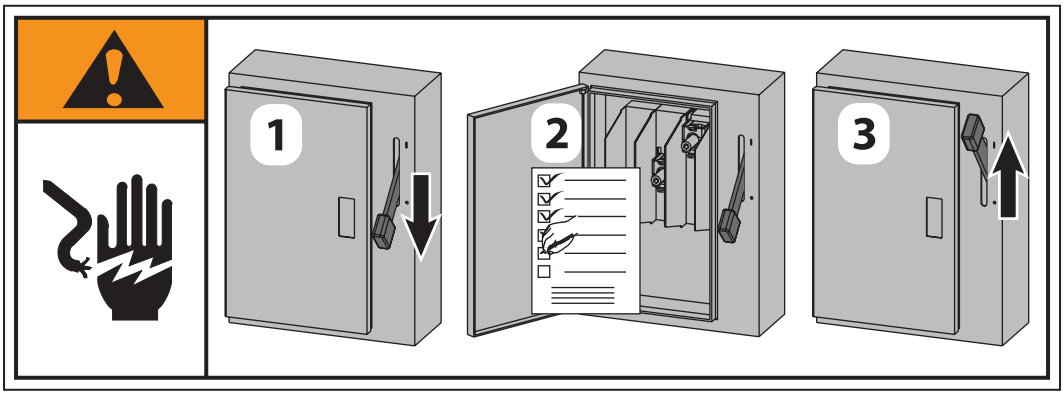

1 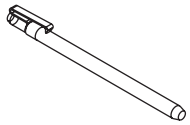 (2X)	2 M5X16 (4X) (12X)	3 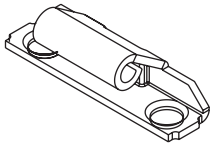 (2X)	4 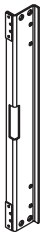 (2X)	5 M5X10 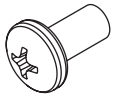 (4X)
6 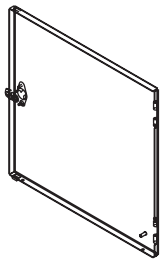	7 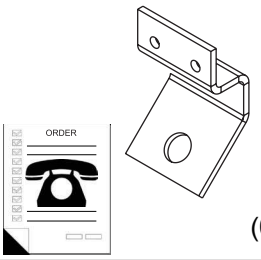 (0X)	8 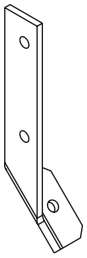 (0X)	9 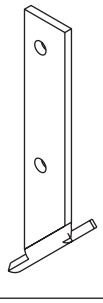 (0X)	10 M8 (4X)
11 M6 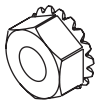 (1X)	12 M6 (1X)	13 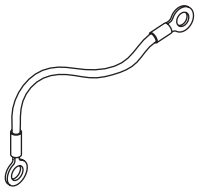 (0X)	14 M5X20 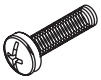 (4X)	15 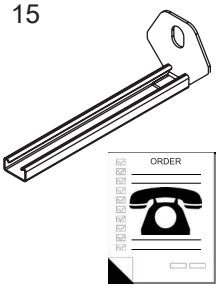 (0X)

© 2018 Hoffman Enclosures Inc.

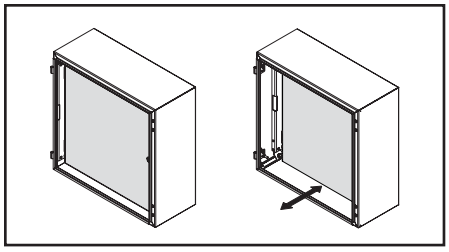

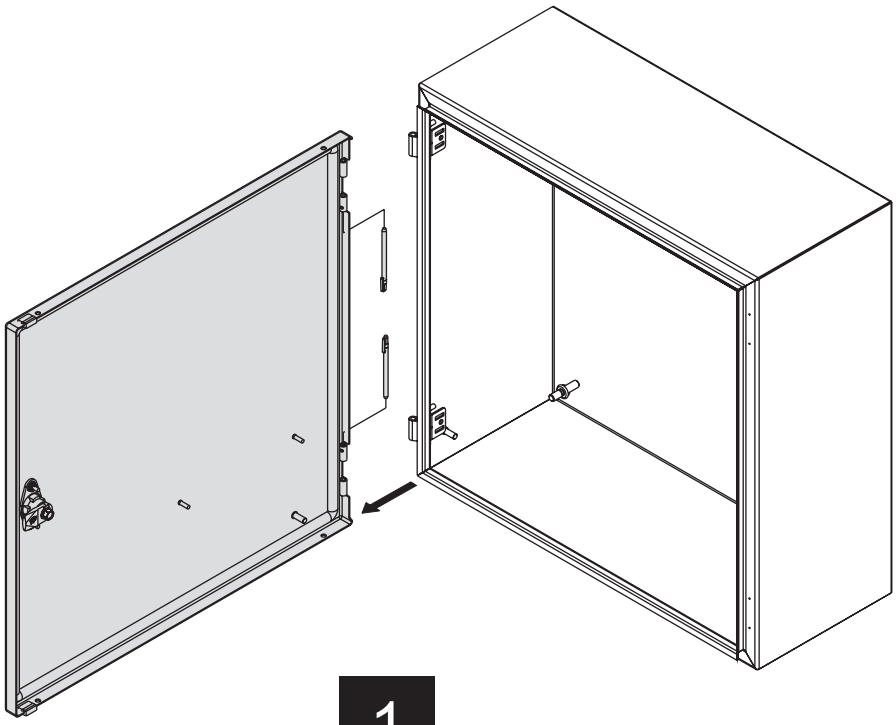

1

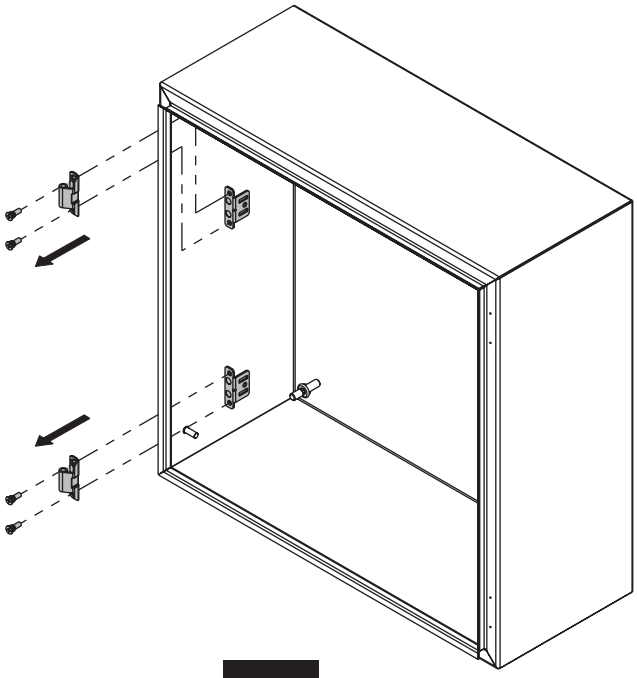

2

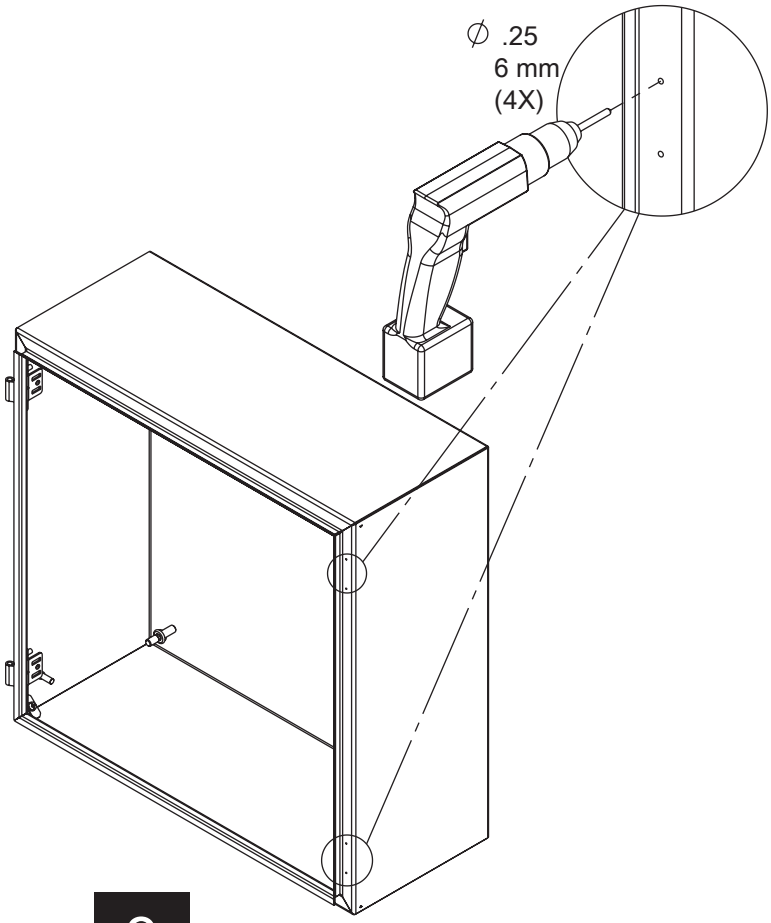

3

© 2018 Hoffman Enclosures Inc.

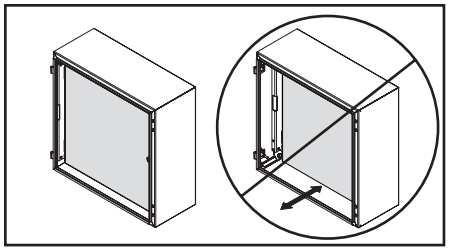

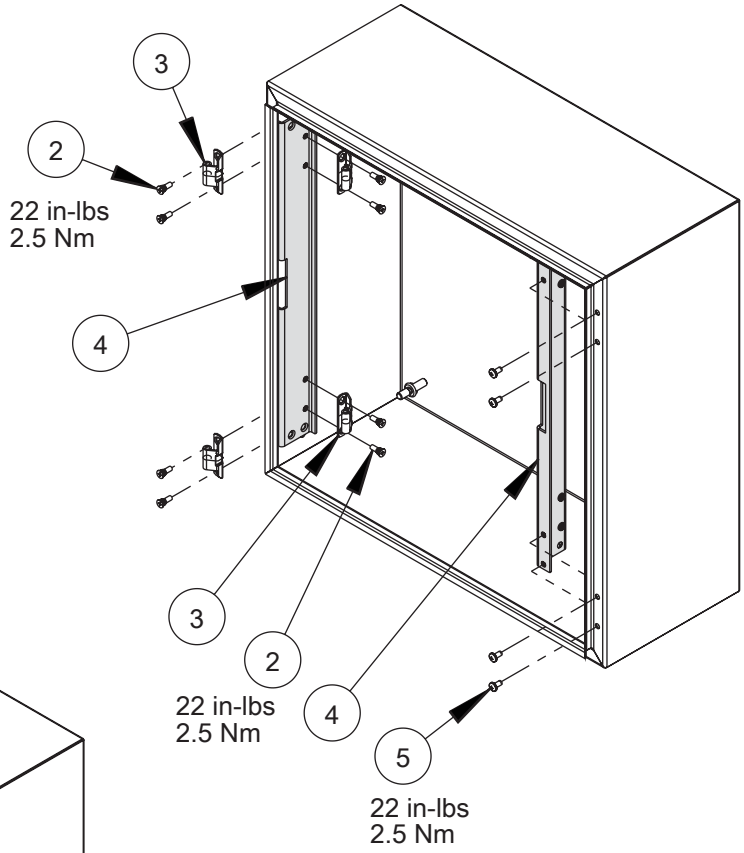

4

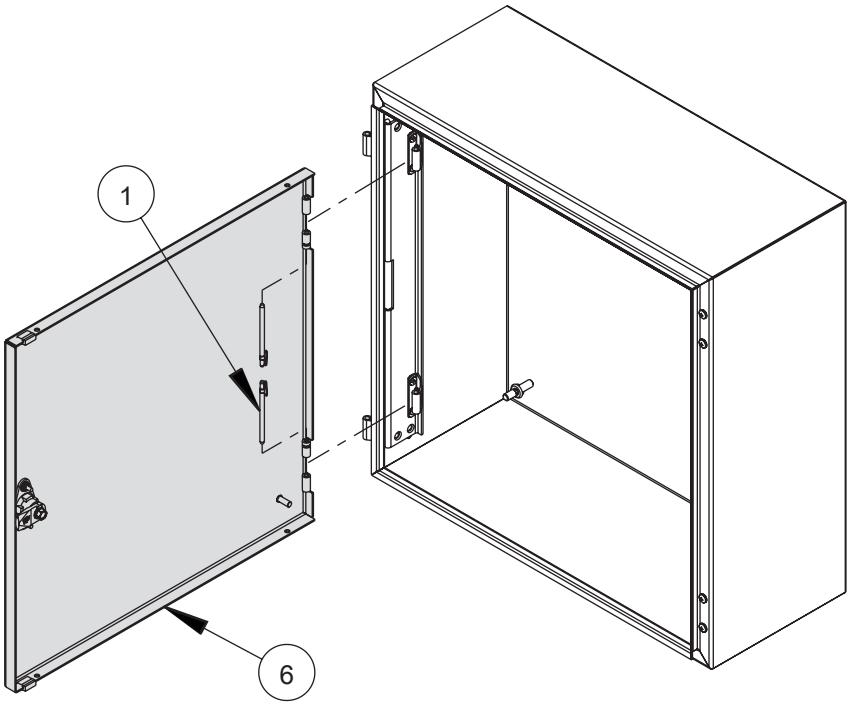

5

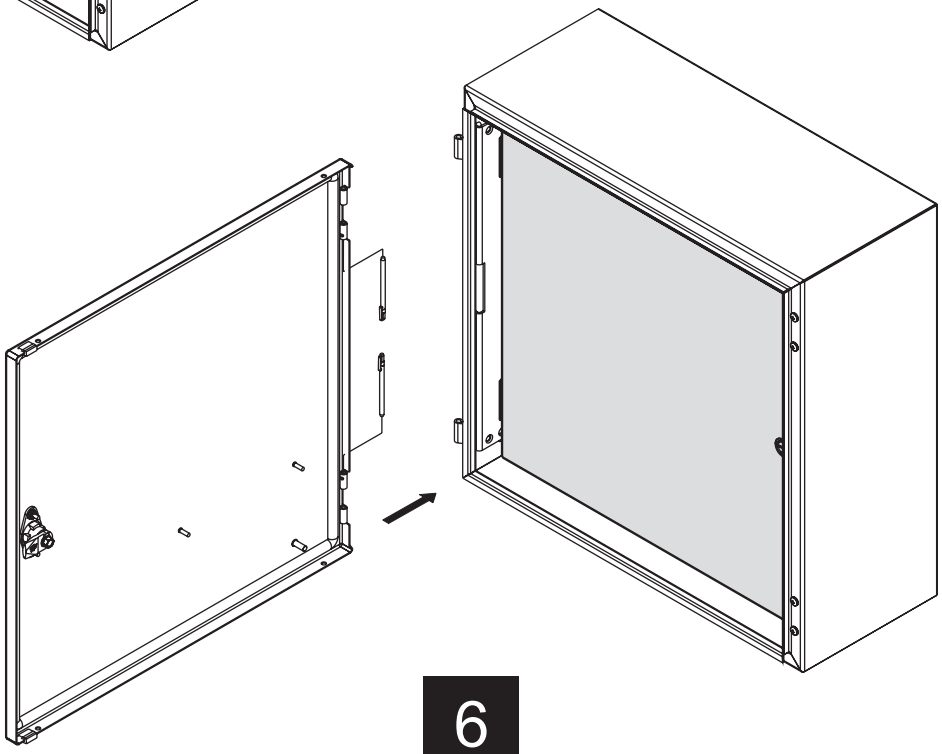

6

© 2018 Hoffman Enclosures Inc.

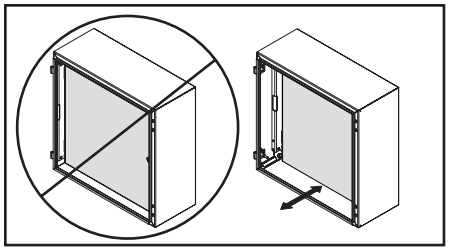

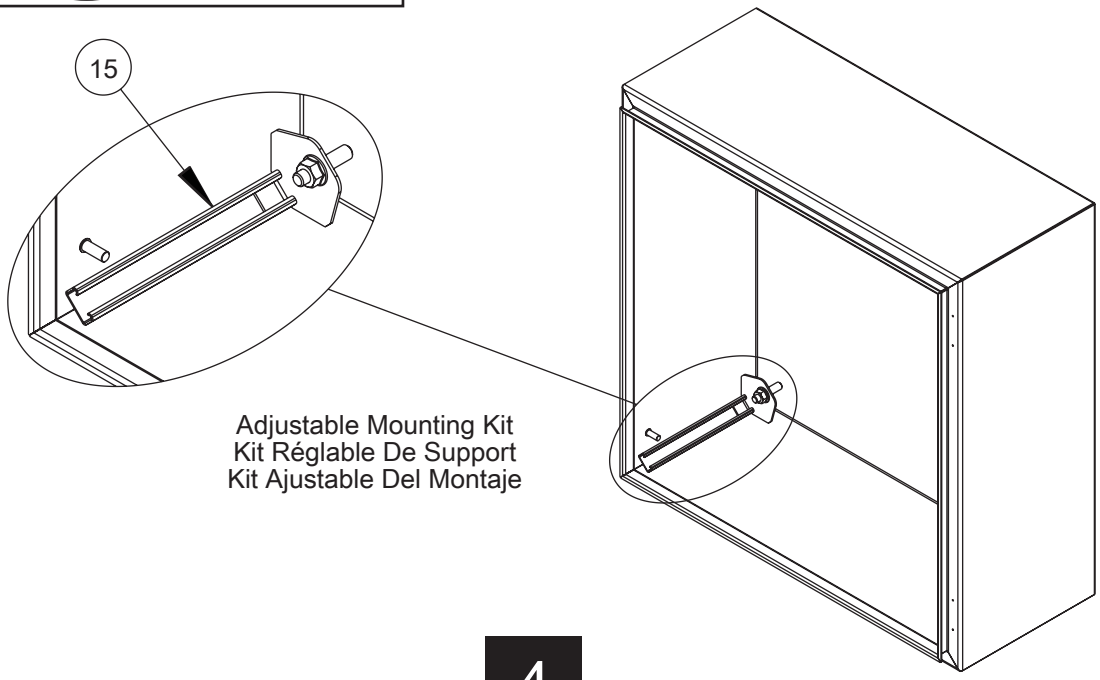

4

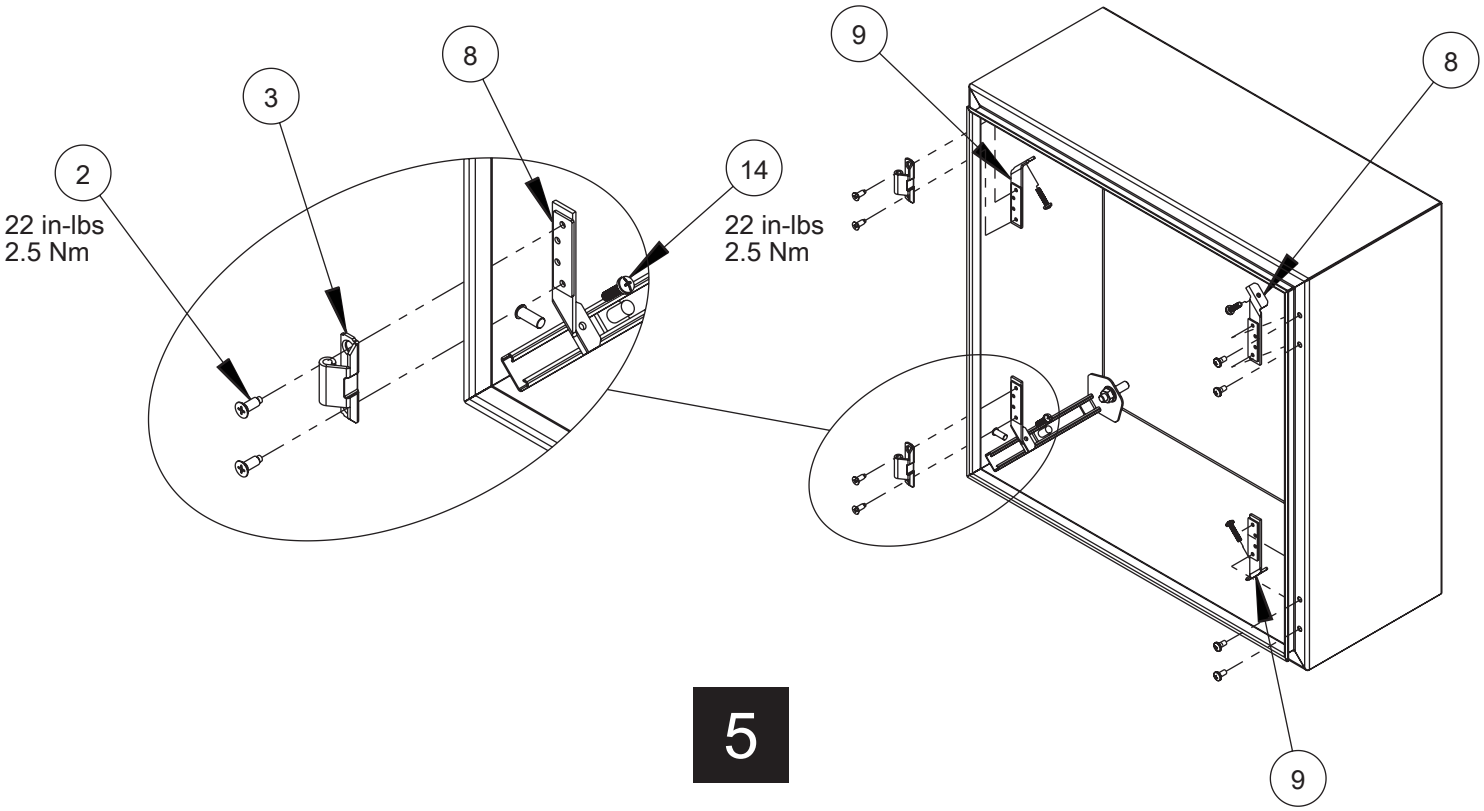

5

© 2018 Hoffman Enclosures Inc.

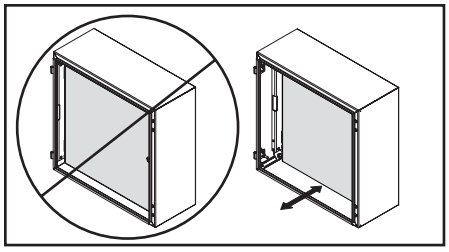

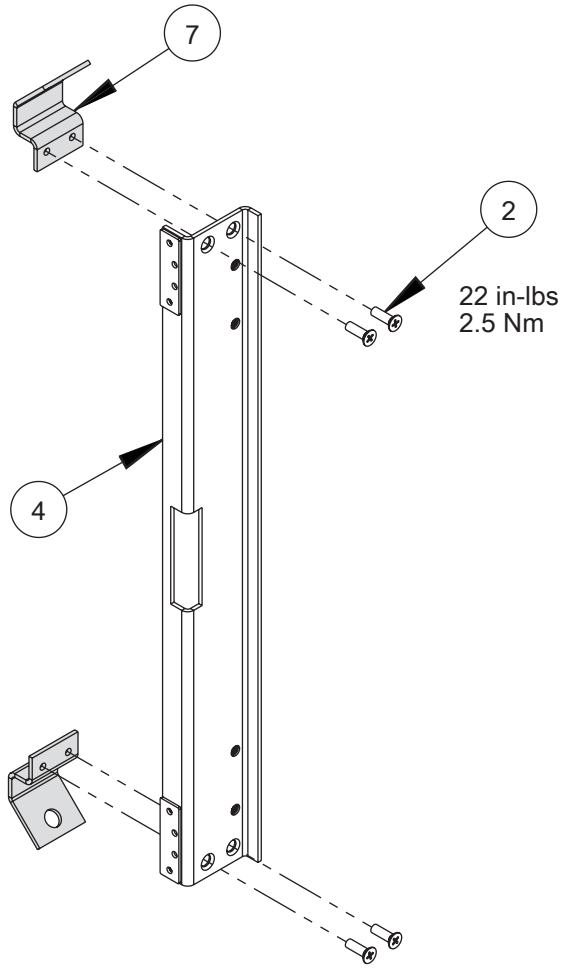

6

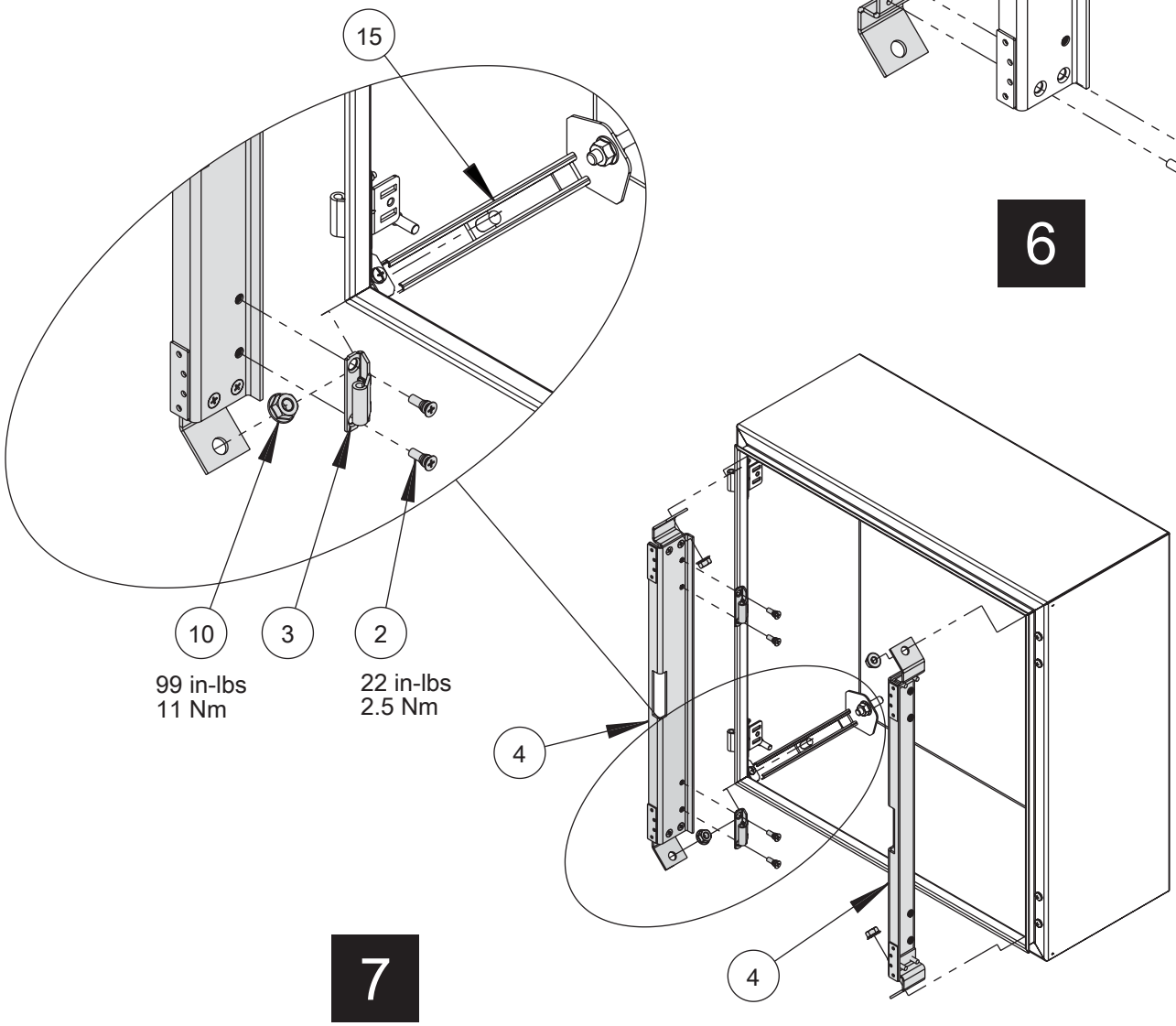

7

© 2018 Hoffman Enclosures Inc.

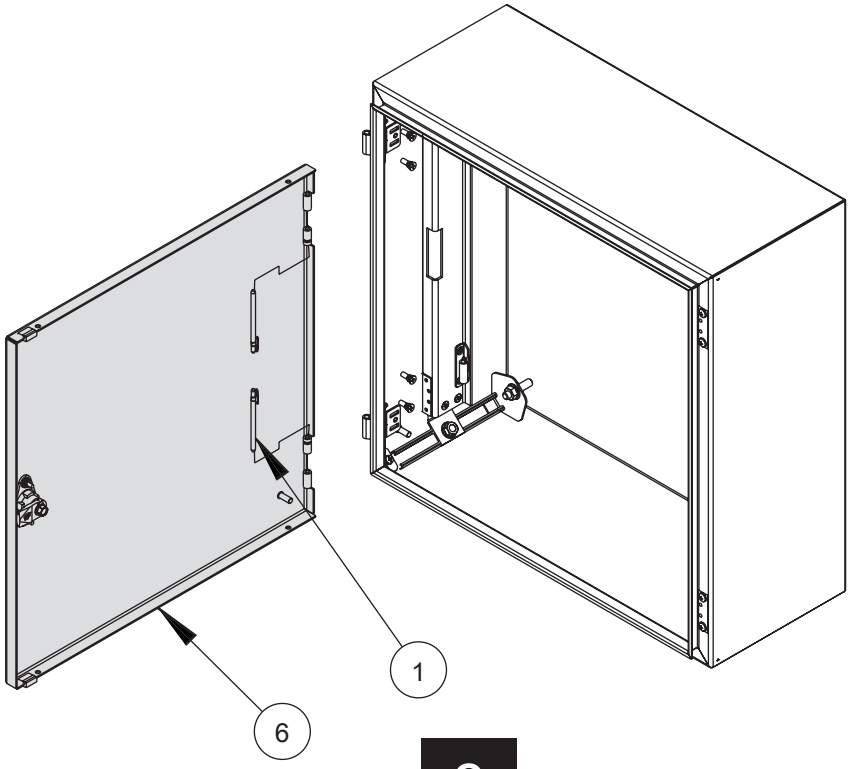

8

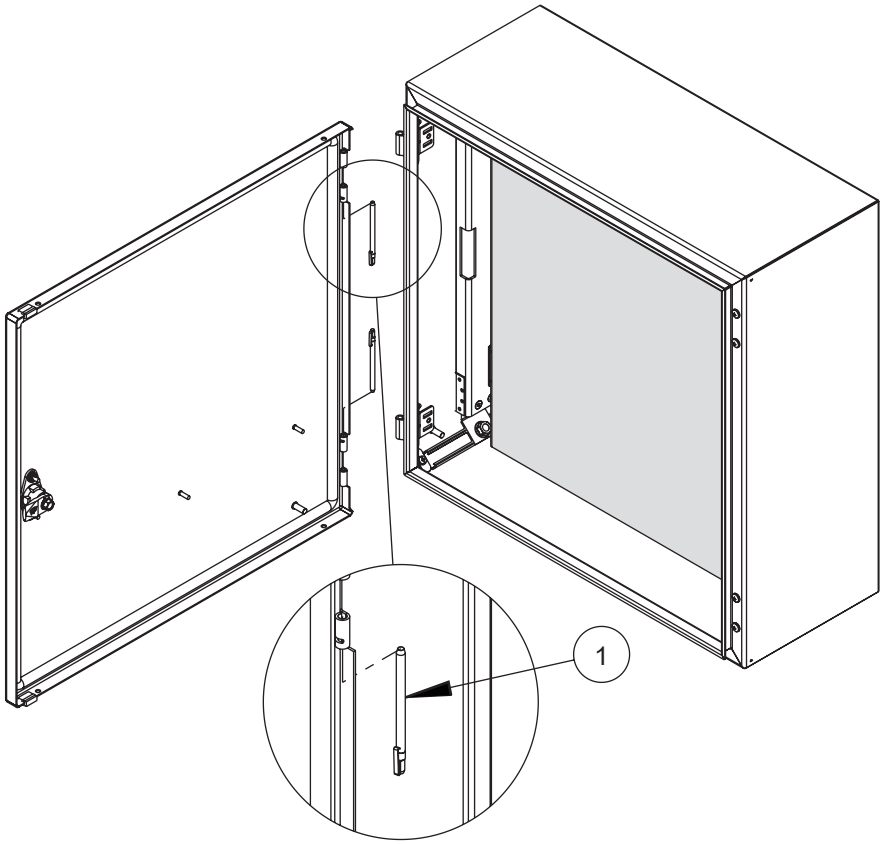

9

© 2018 Hoffman Enclosures Inc.

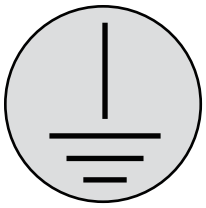

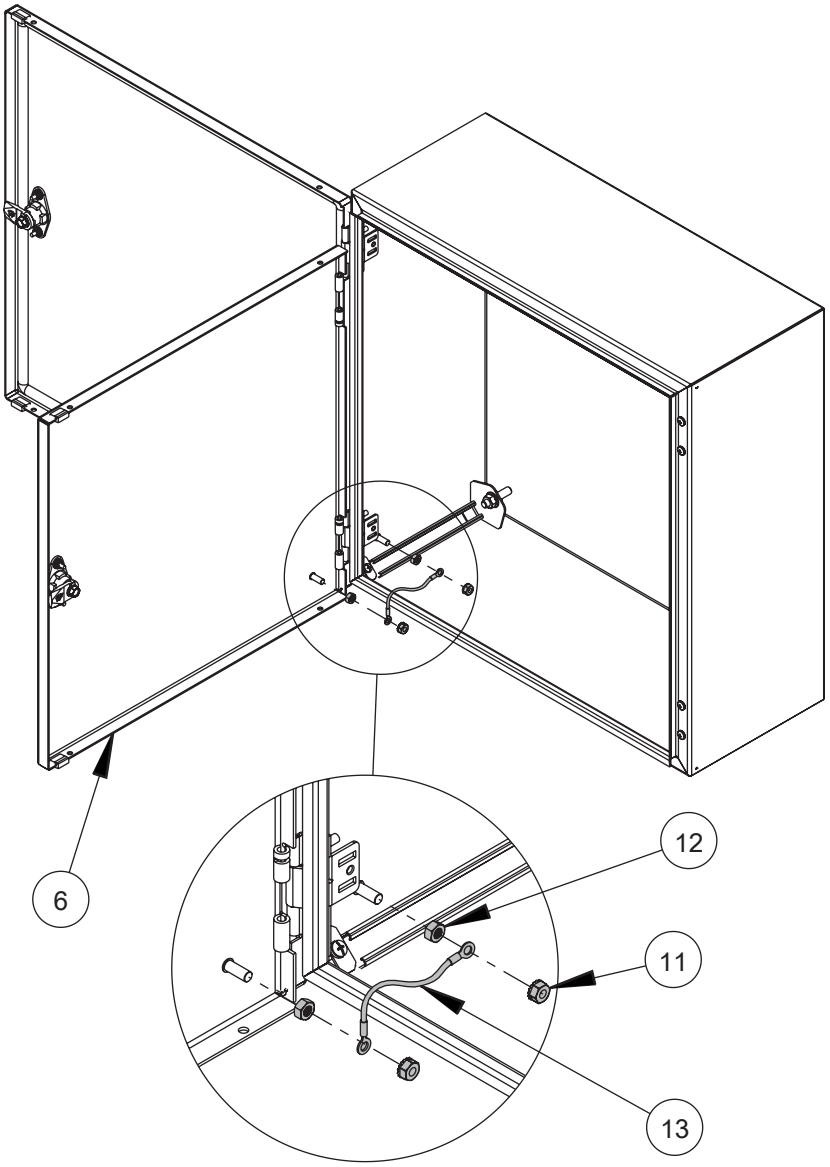

© 2018 Hoffman Enclosures Inc.