Installation and Operating Instructions

Supension System

SYSPEND 281-MAX

Application examples

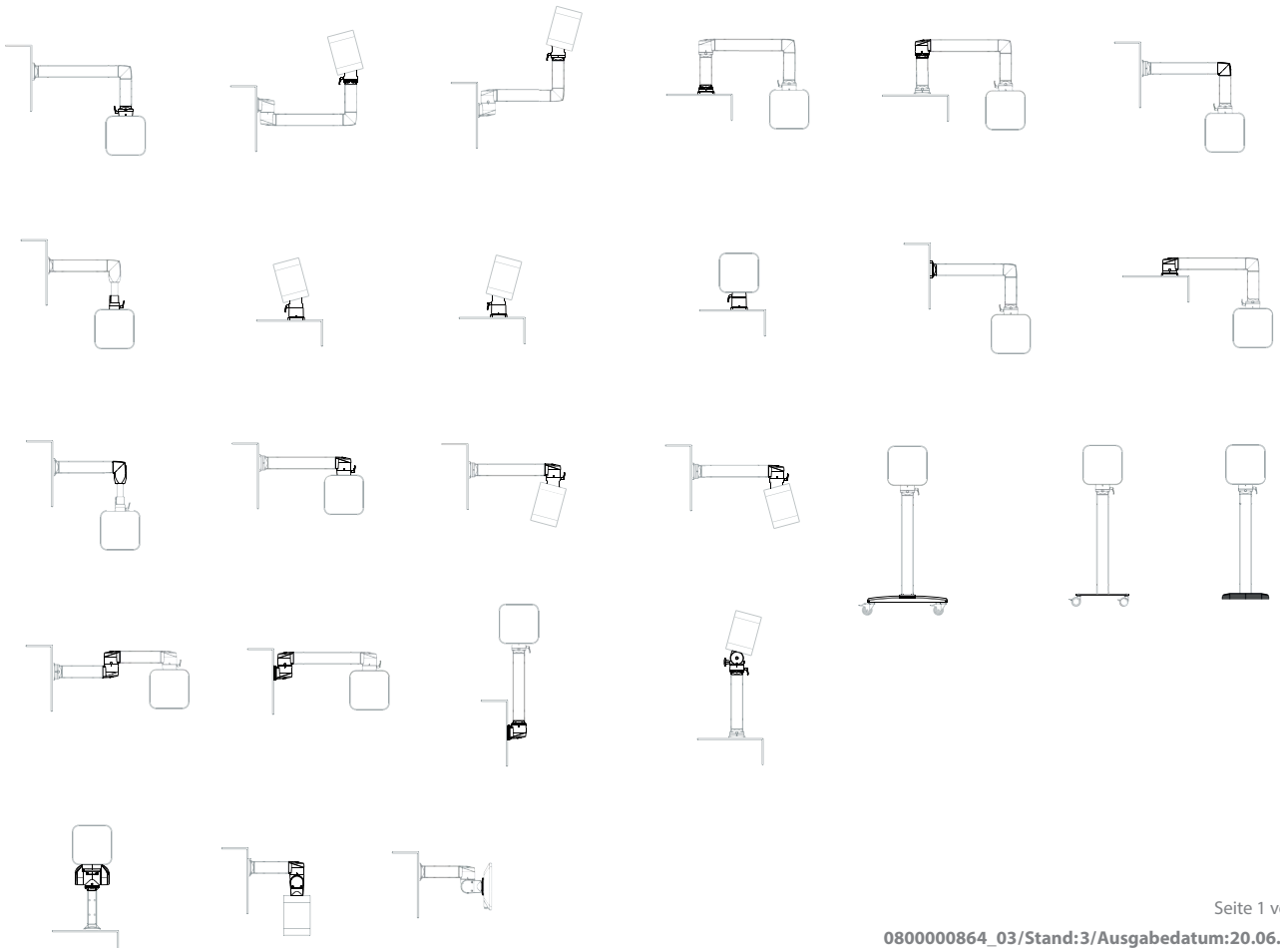

© 2023 Hoffman Enclosures Inc.

Contents

1. Layout and use of the instructions
2. Safety instructions
3. Mounting of tube
   3.1. Round tube
   3.2. Vertical
   3.3. Horizontal
4. Tube alignment
   4.1. Vertical
   4.2. Horizontal Option 1
   4.3. Horizontal Option 2
   4.4. Tube adapter
5. To ascertain the lever screw in
6. Fine adjustment of the tightness
7. Attitude of the tightness of torque (M) Turn/ tilt coupling
8. Fixing at enclosure
   8.1. Standard
   8.2 Turn/tilt coupling W
   8.3 Turn/tilt coupling S
   8.4 with adapter plate VESA 75/100
9. Mounting on building or machine
   9.1. Standard
   9.2. with small base
   9.3 with FLEX.base
10. To crew link cap
11. Accessories
12. Mechanical Data
13. Load diagram SYSPEND 281-MAX
14. Tube Cutoff

1 Layout and use of the instructions

All components that are not included in the delivery specification are shown in grey. The instructions do not necessarily follow the operating or installation sequence. Not all sections apply to every component.

Procedure:
- Identify the pictogram applicable for your application
- Start at the beginning and select the section applicable for your application, select the section by assigning the pictograms

2 Safety Instructions

Caution

Risk of injury

► Do not reach into tubes

© 2023 Hoffman Enclosures Inc.

3 Mounting of tube

3.1 Round tube S2MFC48

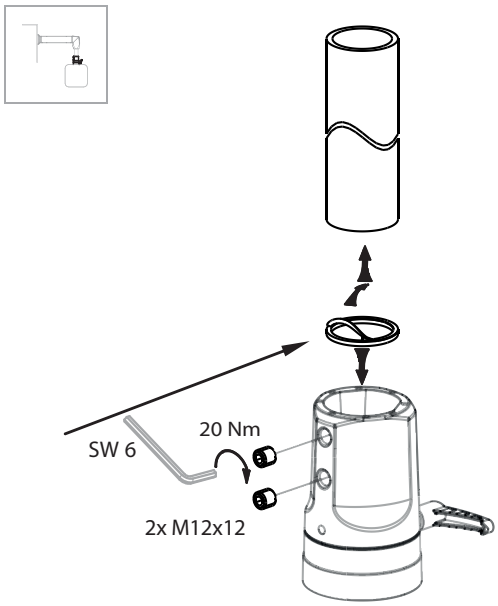

3.2 Vertical S2MFC, S2MRB, S2MWJV, S2ME, S2MER, S2MWF, S2MACB, S2MACF, S2MSCV

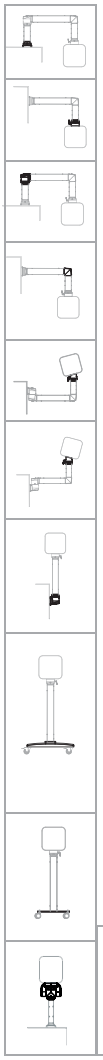

3.2.1

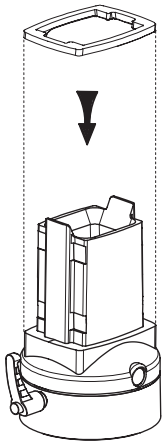

3.2.2

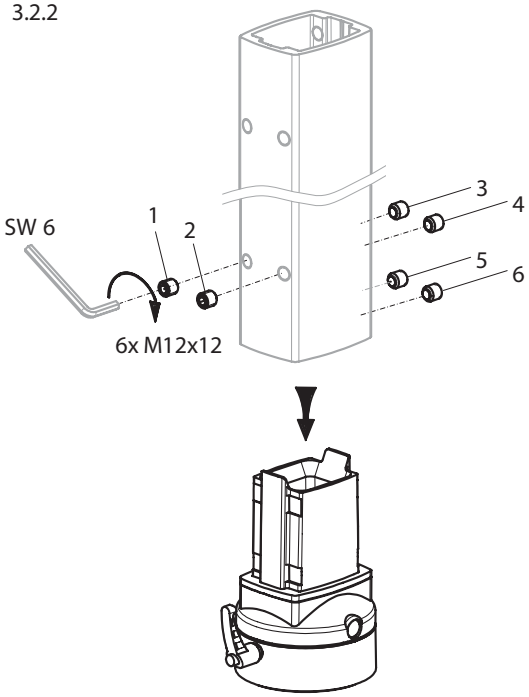

3.2.3

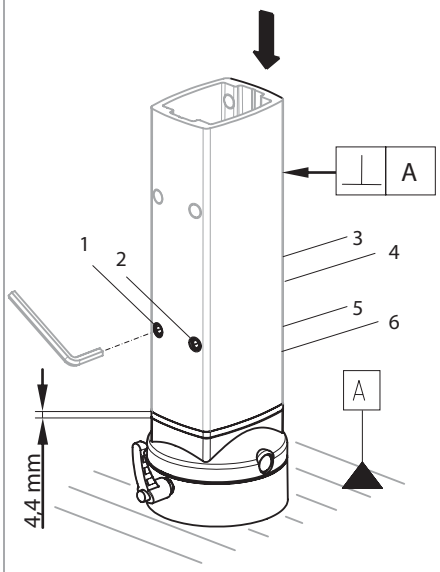

3.2.1 - Press gasket flat
3.2.2 - Tighten screws 1 – 6 until they are flush on the inside
- Fit tube in position
3.2.3 - Press gasket with tube in axial direction while tightening screw 3 and 4 until there is no play
- Maintain pressure while tightening screws 5 and 6 to 20 Nm
- Align tube: see “Tube Alignment”
- Firmly tighten screws in stages
- Check that gap is max. 4.4. mm

© 2023 Hoffman Enclosures Inc.

3.3 Horizontal S2MFEC. S2MSJ, S2MIJ, S2MWJH, S2MSCH

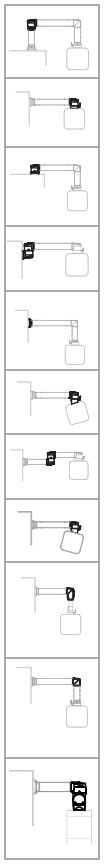

3.3.1

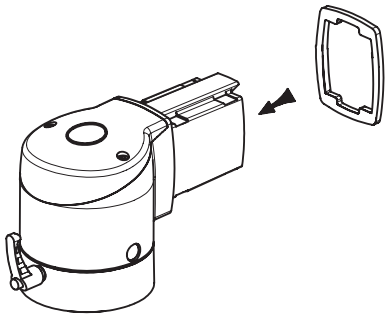

3.3.2

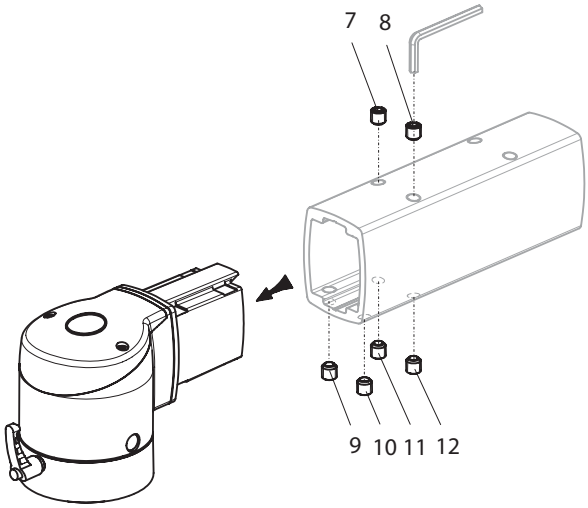

3.3.1 - Press gasket flat

3.3.2. - Tighten screws 7 – 12 until they are
- Fit tube in position

3.3.3

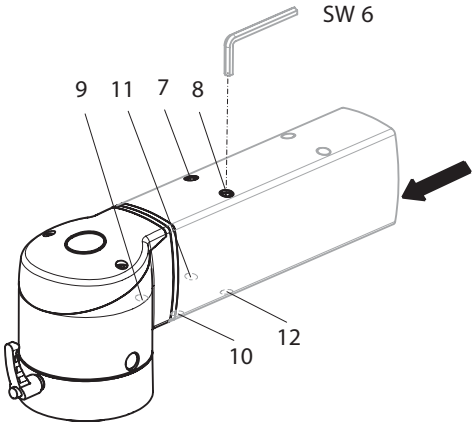

3.3.4

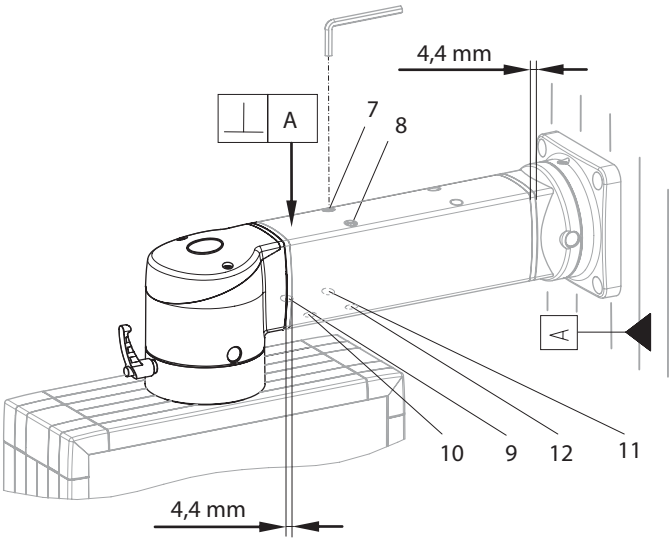

3.3.3 - Press gasket with tube in axial direction while tightening screw 11and 12 until there is no play
- Maintain pressure while tightening screws 9 and 10 to 20 Nm
- Align tube (see Tube Alignment)

3.3.4 - Secure enclosure to tube
- Align tube (see Tube Alignment)
- Firmly tighten screws in stages
- Check that gap is max. 4.4. mm

© 2023 Hoffman Enclosures Inc.

4 Tube alignment

4.1 Vertical S2MFC, S2MRB, S2MWJV, S2ME, S2MER, S2MWF, S2MACB, S2MACF, S2MSCV

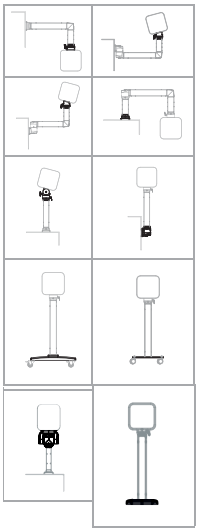

4.1.1

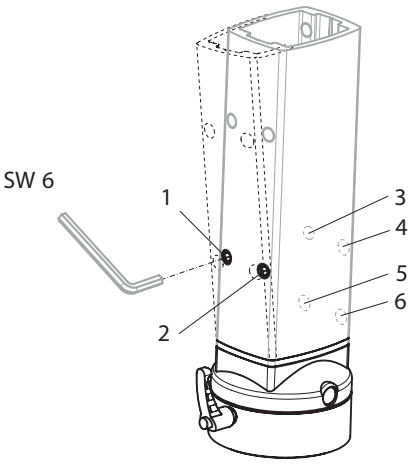

4.1.2

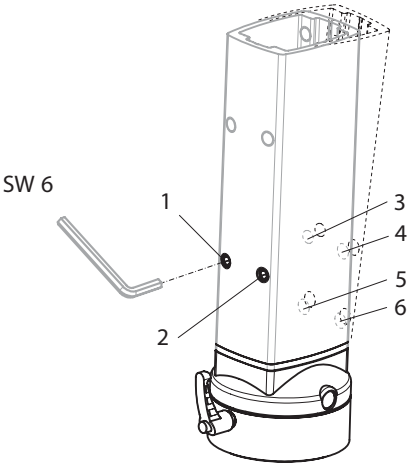

4.1.1 - Slacken off screws 3, 4
- Tighten screws 1, 2

4.1.2 - Tighten screws 3, 4
- Slacken off screws 1, 2

4.2 Horizontal Option 1 S2MFEC. S2MSJ, S2MIJ, S2MWJH, S2MSCH

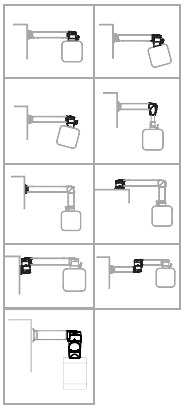

4.2.1

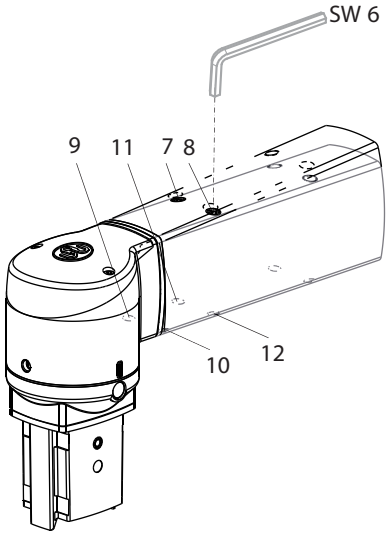

4.2.2

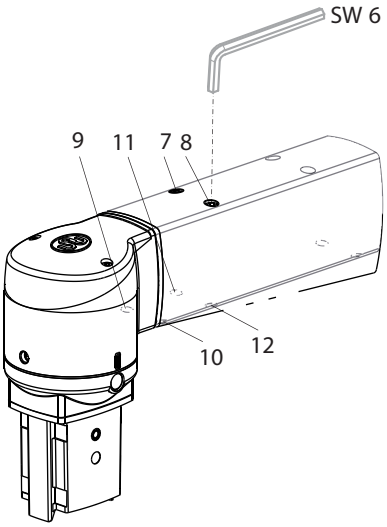

4.2.1 - Slacken off screws 11, 12
- Tighten screws 7, 8

4.2.2 - Tighten screws 11, 12
- Slacken off screws 7, 8

© 2023 Hoffman Enclosures Inc.

4.3 Horizontal

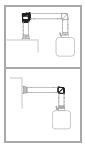

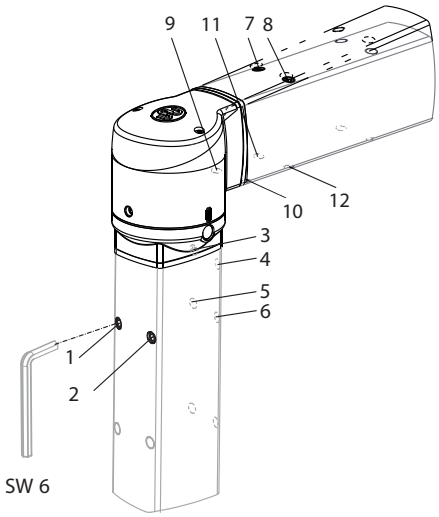

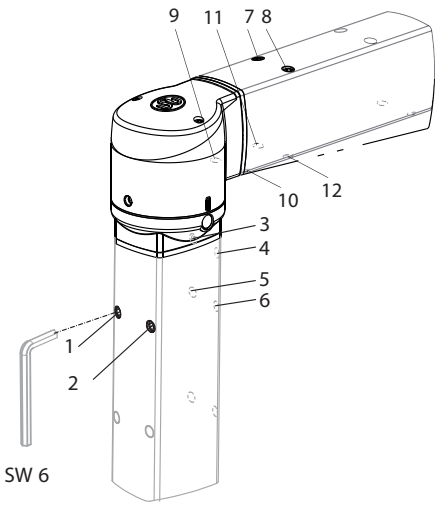

4.3.1 - Slacken off screws 5, 6 and tighten screws 1, 2
and/or
- Slacken off screws 11, 12 and tighten screws 7, 8

4.3.2 - Tighten screws 5, 6 and slacken off screws 1, 2
and/or
- Tighten screws 11, 12 and slacken off screws 7, 8

4.4 Tube adapter S2MTA

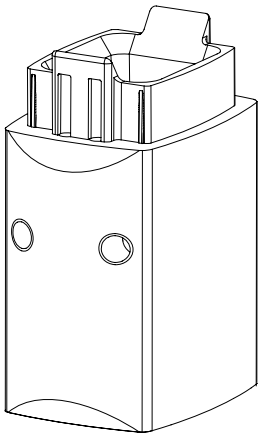

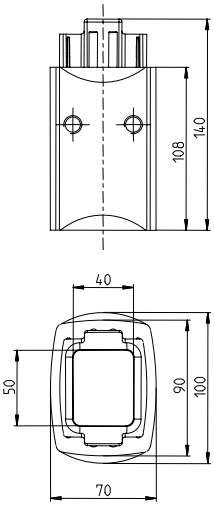

Suitable for...

Coupling	Elbow - rotating	Elbow
Elbow coupling	Reduced elbow	

Mechanical Data

Tube Adapter	GD-Al (RAL 7016 Standard)
Gasket	Neoprene

© 2023 Hoffman Enclosures Inc.

1

Glue the gasket

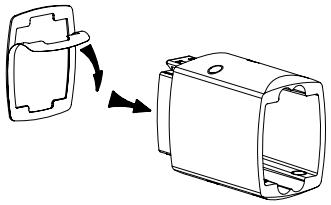

2

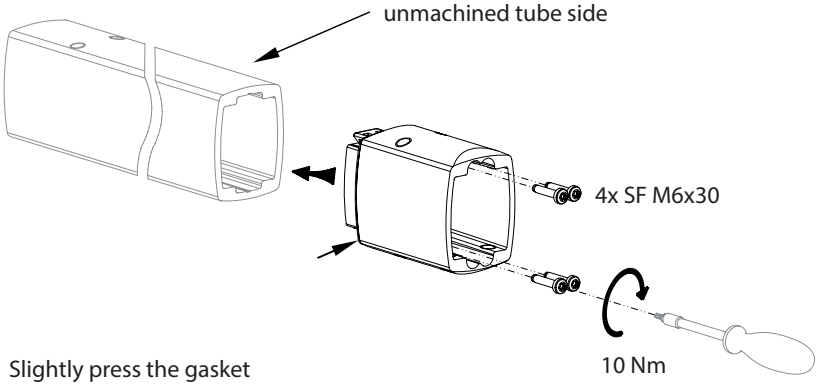

Slightly press the gasket during mounting

3

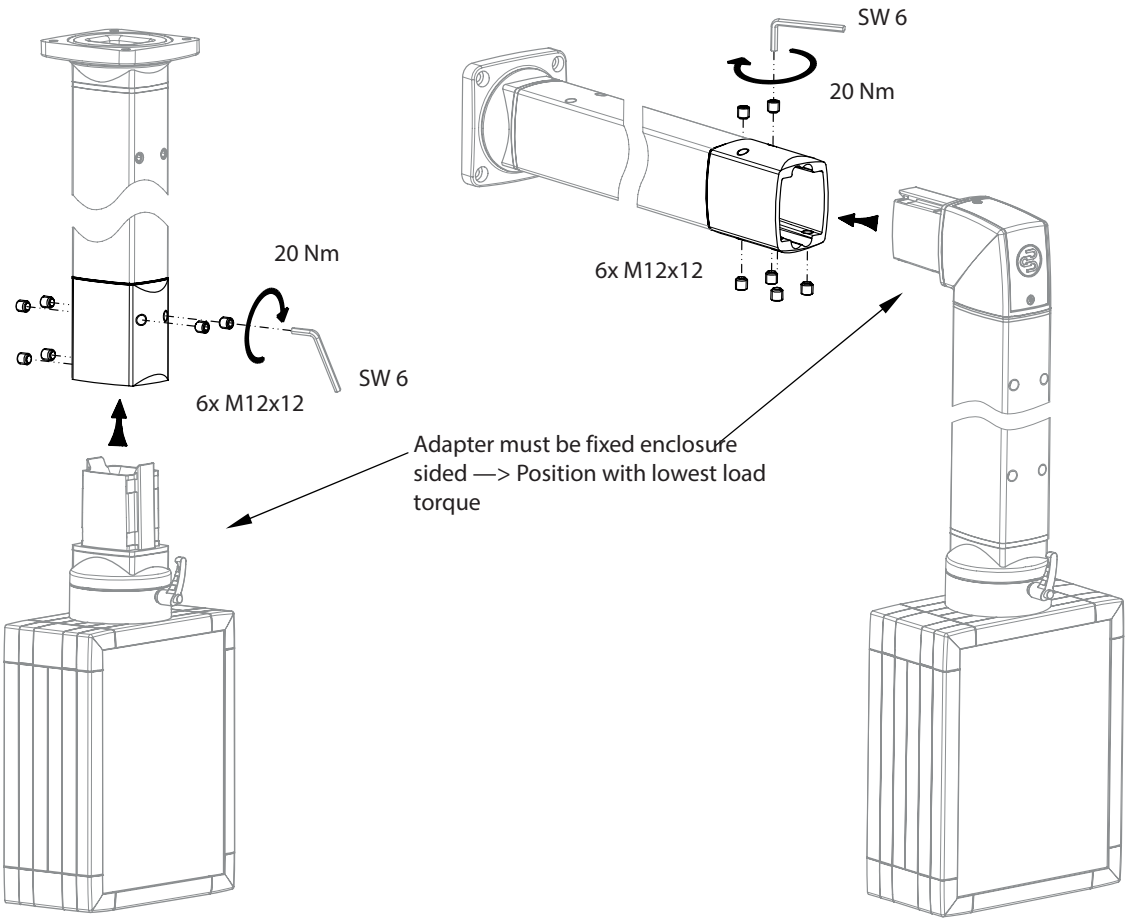

© 2023 Hoffman Enclosures Inc.

5 To ascertain the lever screw in S2MFC, S2MFEC, S2MACB,S2MACF, S2MBC

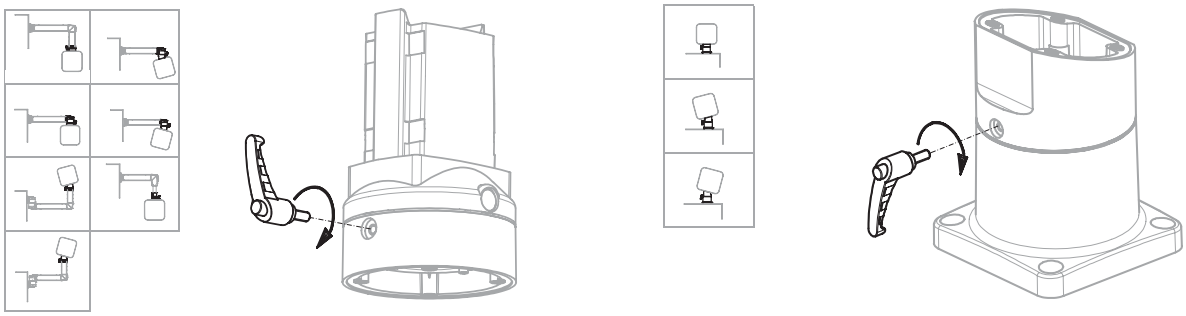

6 Fine adjustment of the tightness

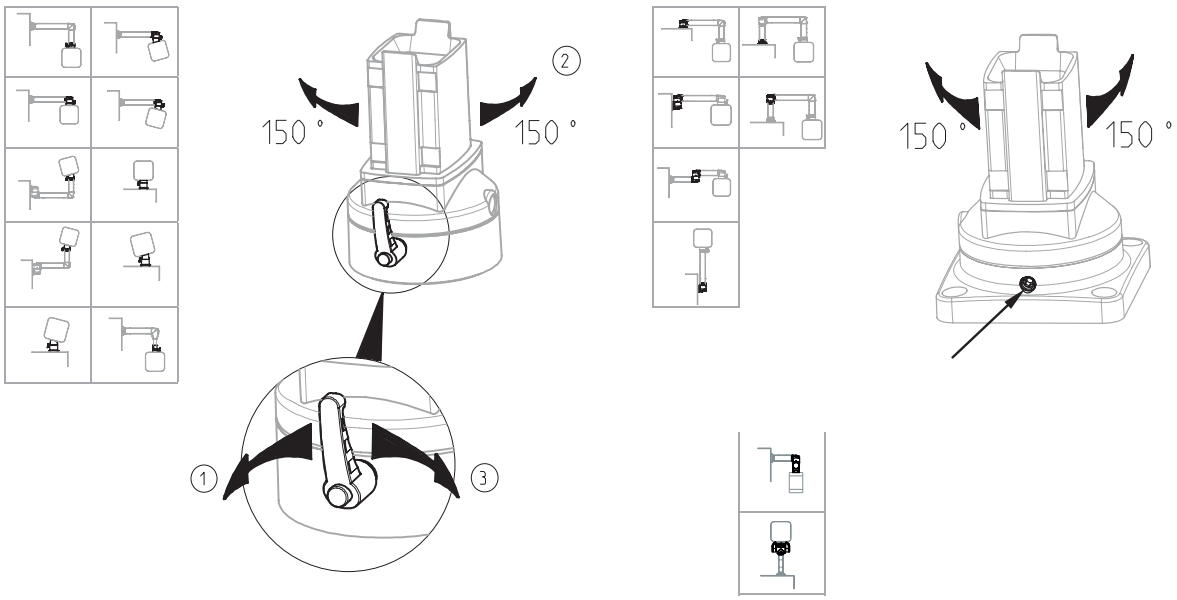

© 2023 Hoffman Enclosures Inc.

7 Attitude of the tightness of torque (M) Turn/ tilt coupling S2MCV, S2MCH

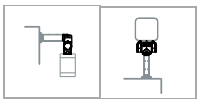

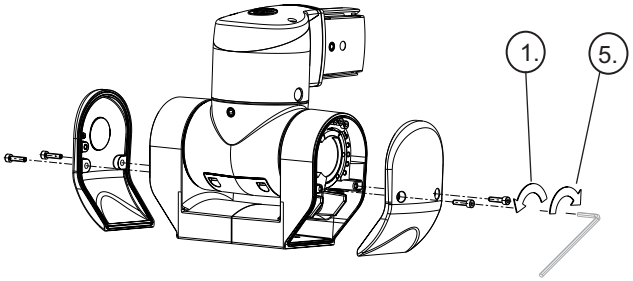

Unscrew the cover Pos.1
Mount the cover Pos. 5

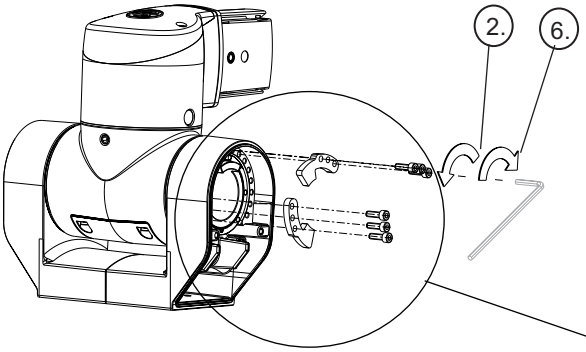

Unscrew the tilt angle limiter Pos.2
Mount the tilt angle limiter Pos. 11

Application examples for tilt angle limiter

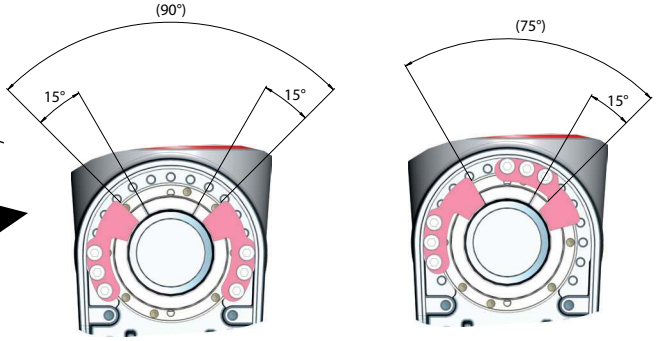

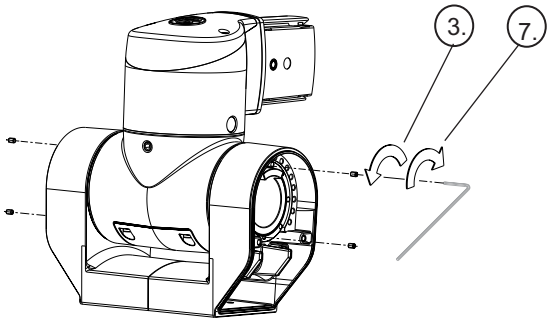

Unscrew the threaded pin M4 Pos. 3 /
Screw the threaded pin M4 Pos. 7

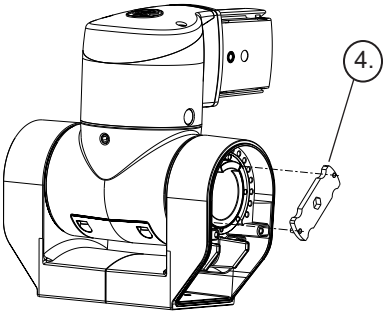

Loosen threaded nut with tool item no. 980 5422 000. Pos. 4 max. 1 revolution anticlockwise. Set the desired inclination moment by tightening the threaded sleeve

© 2023 Hoffman Enclosures Inc.

Unscrew the cover Pos. 1
Mount the cover Pos. 4

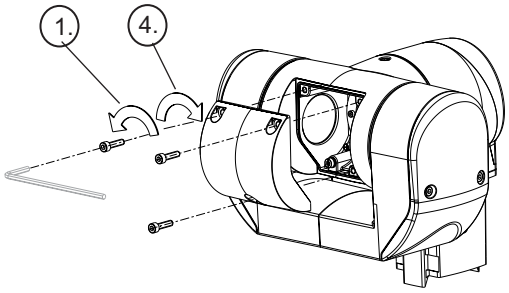

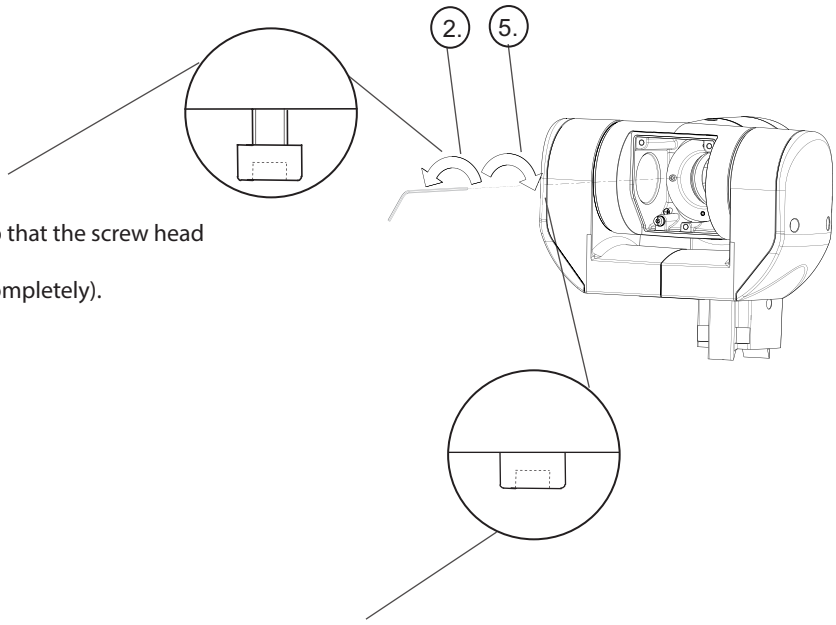

Loosen cylinder screws M3, so that the screw head lifts 2-3 mm. Pos. 2
(Attention: Do not unscrew completely).

Screw the M3 screws as far as the stop and tighten at 1,5 Nm Pos. 5

Loosen the threaded sleeve anticlockwise with tool item no. 9805421000. Pos. 3 max. 1 revolution.Set the desired swing torque by tightening the threaded sleeve

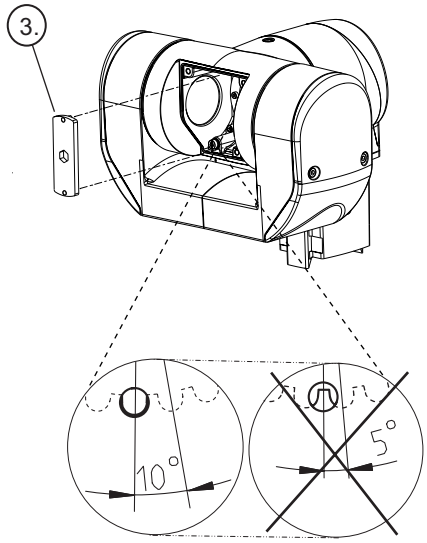

Correct the position of the through holes (as Abb. 2 shows) by tightening clockwise. Attention: Not as shown in Abb. 3!

Abb.2 Abb.3

© 2023 Hoffman Enclosures Inc.

8 Fixing at enclosure

8.1 Standard

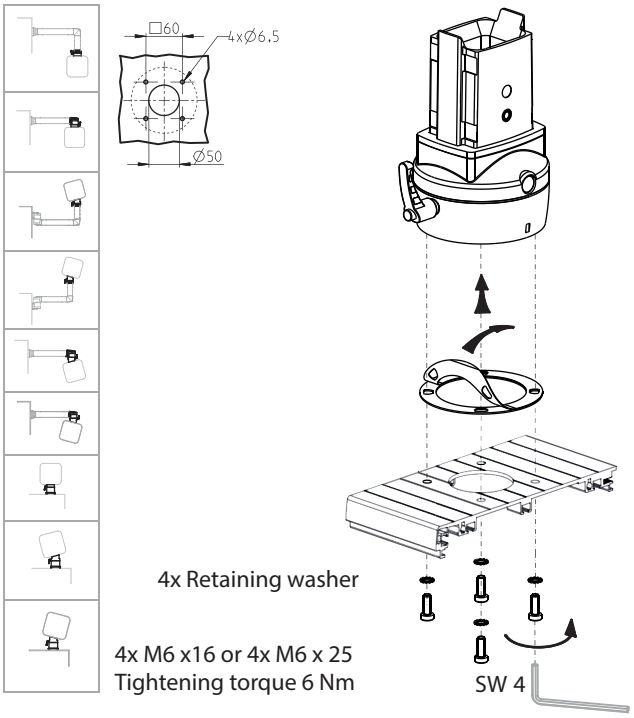

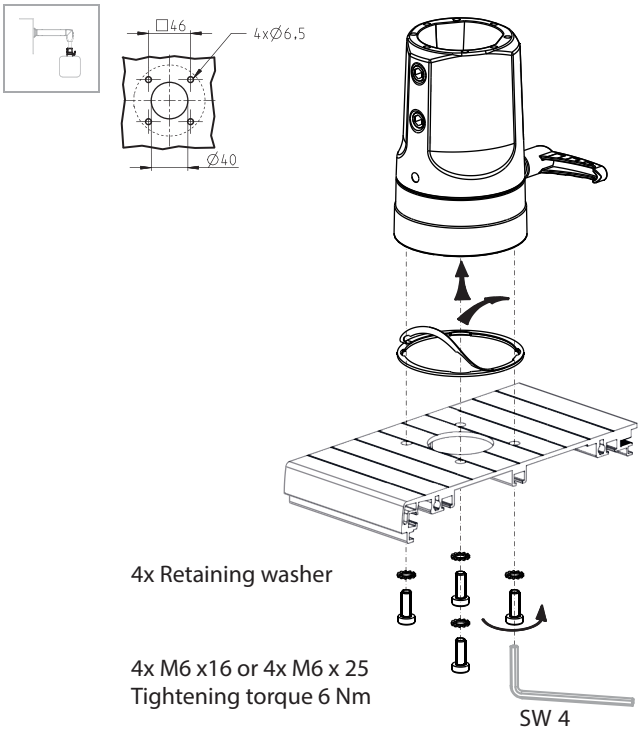

8.2 Turn/tilt coupling W S2MSCH

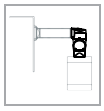

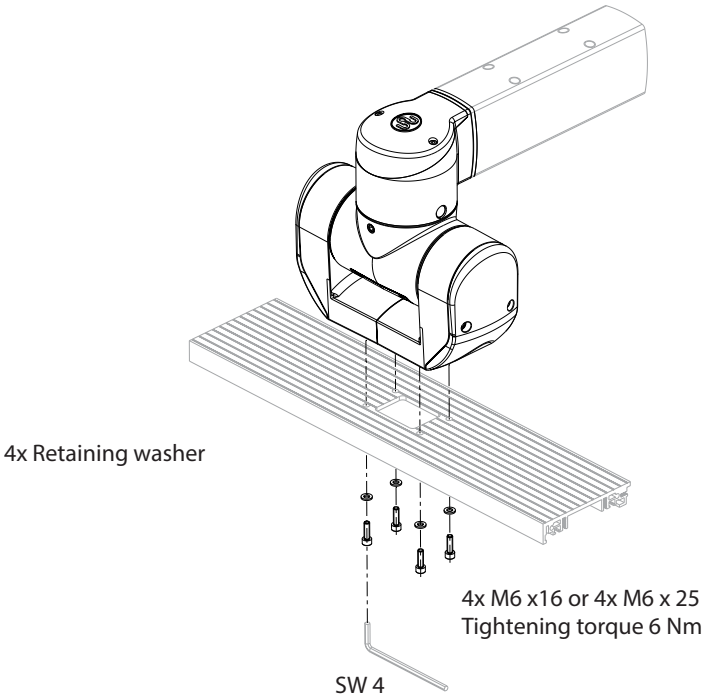

© 2023 Hoffman Enclosures Inc.

8.3 Turn/tilt coupling S S2MSCV

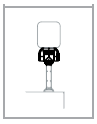

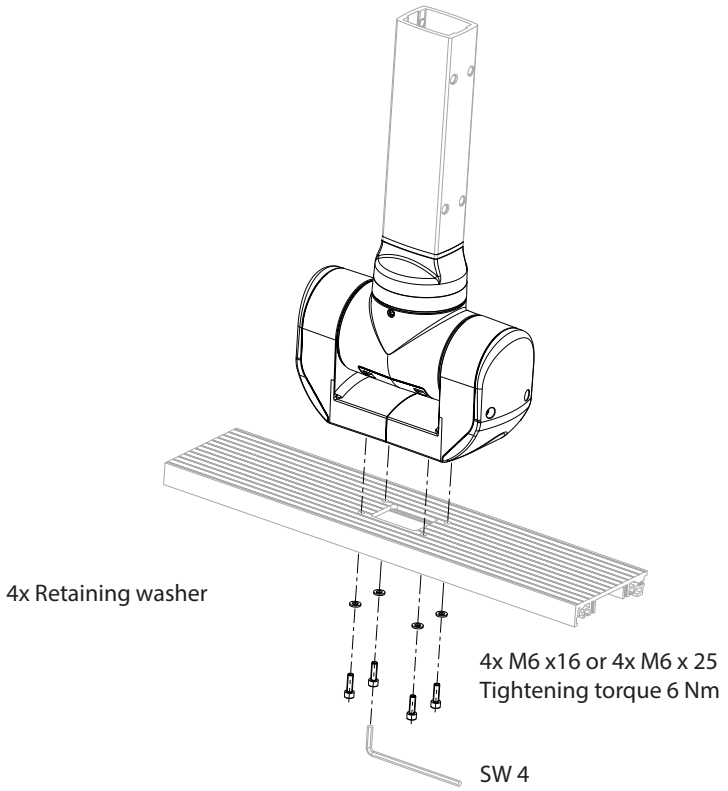

8.4 with adapter plate VESA 75/100 S2MVAP

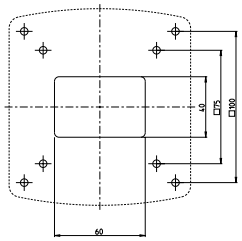

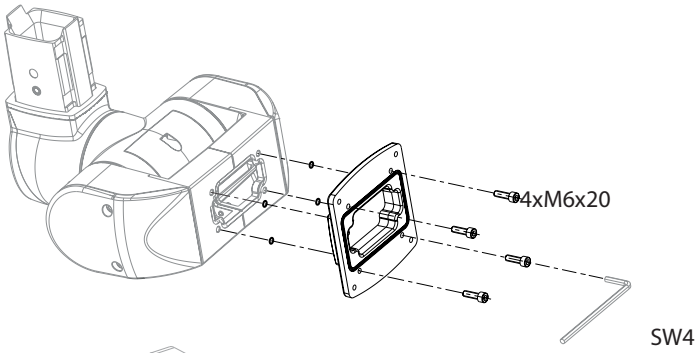

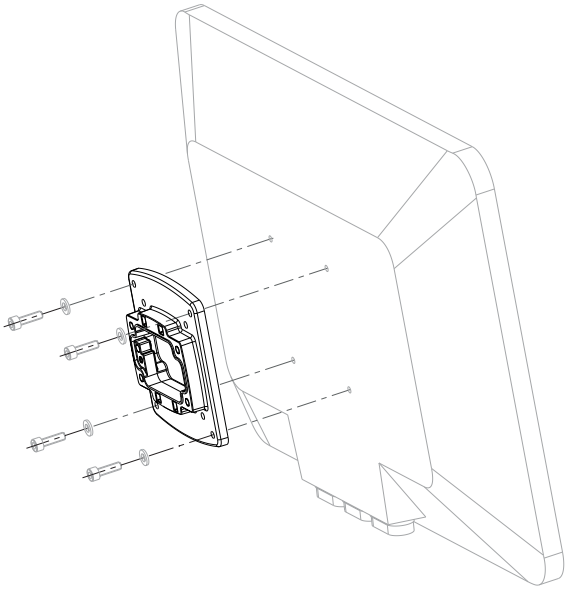

© 2023 Hoffman Enclosures Inc.

9 Mounting on building or machine

9.1 Standard

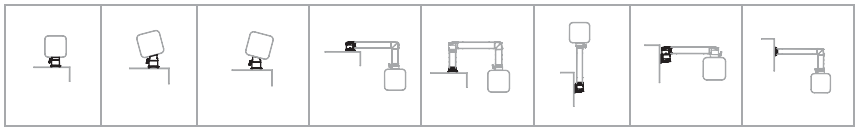

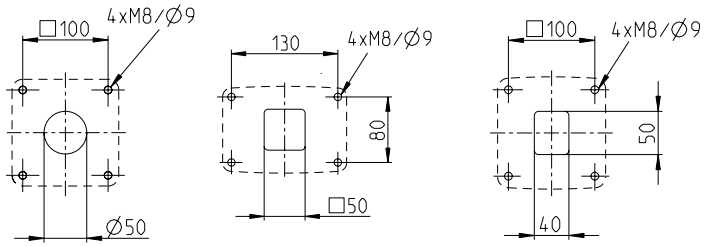

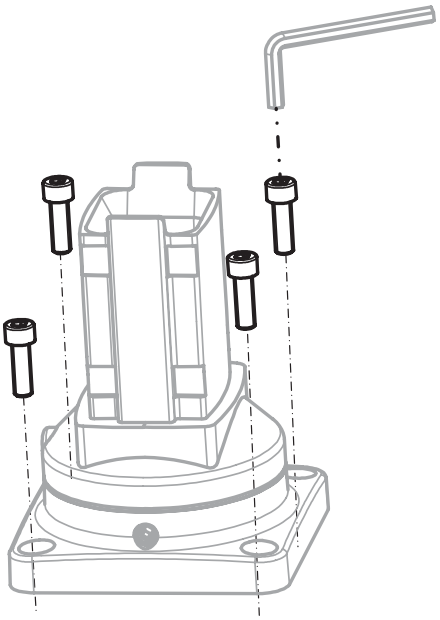

9.2 with small base S2MPBS

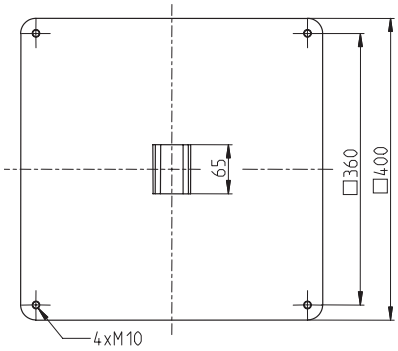

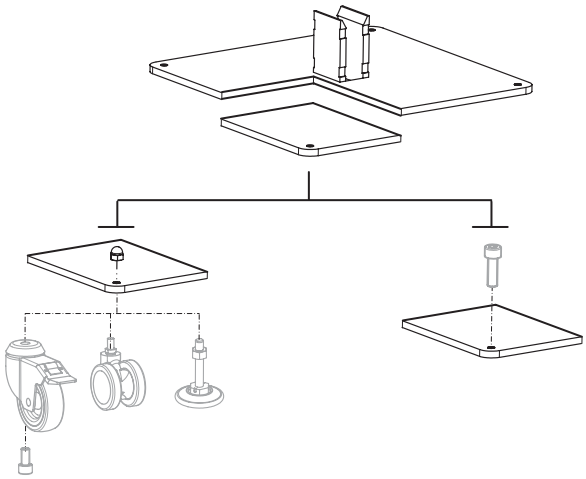

See “Accessories for Bases” Page 16

© 2023 Hoffman Enclosures Inc.

10 To crew link cap

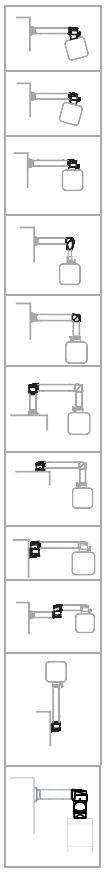

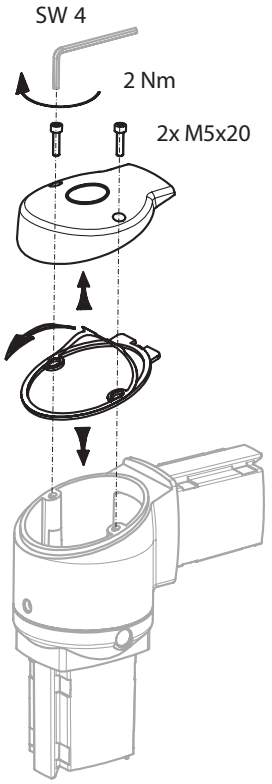

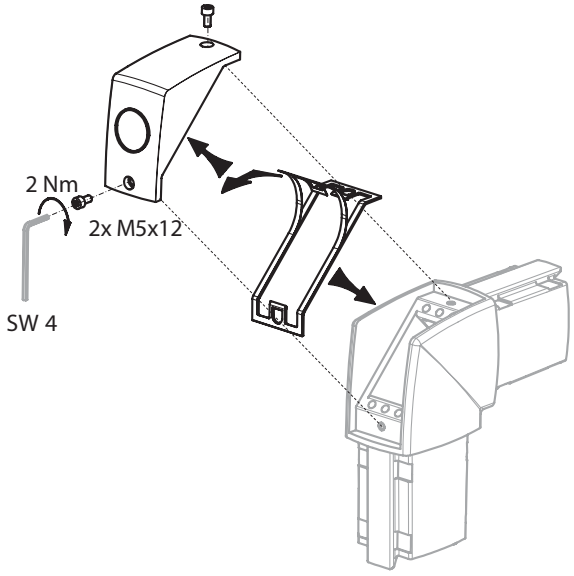

11 Accessories

Art No.	Type
S2MRL	Rotation limiters

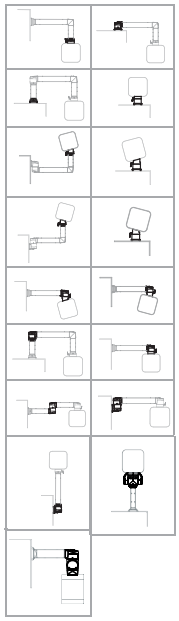

Scope of supply
1x Cap
10x Bills

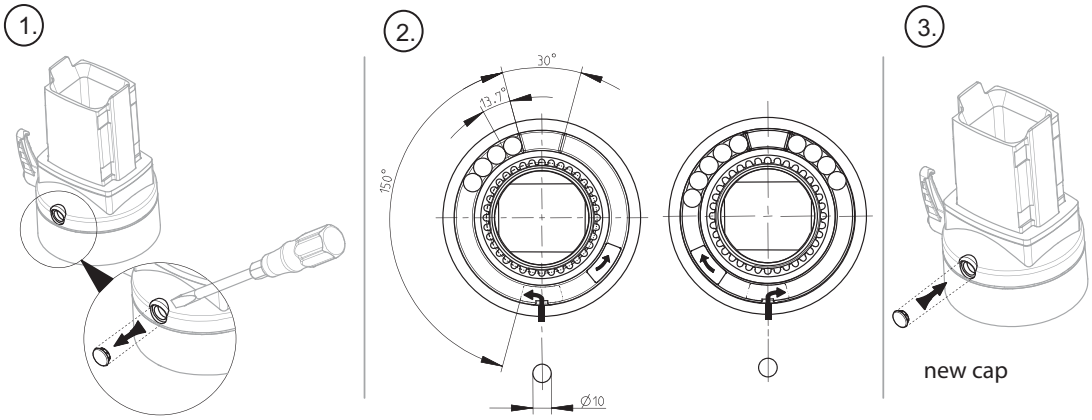

x° = Rotation
n = Number of bills per side
x° = 150° - (n x 13,7°)

© 2023 Hoffman Enclosures Inc.

S2MA48 | Adapter plate

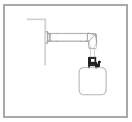

1.

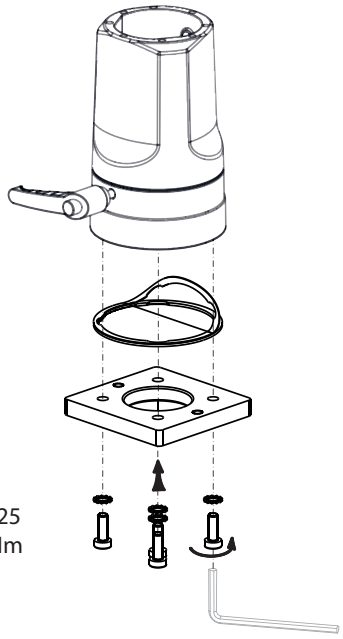

4x Retaining washer

4x M6 x16 or 4x M6 x 25
Tightening torque 6 Nm

SW 5

2.

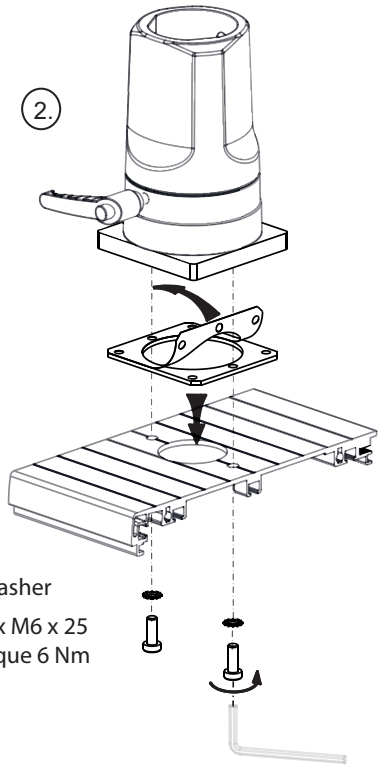

2x Retaining washer

2x M6 x16 or 2x M6 x 25
Tightening torque 6 Nm

SW5

S2MLSAR | Signal light Kit

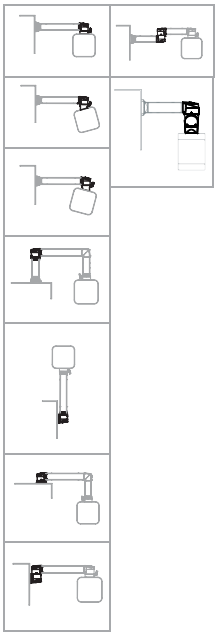

1.

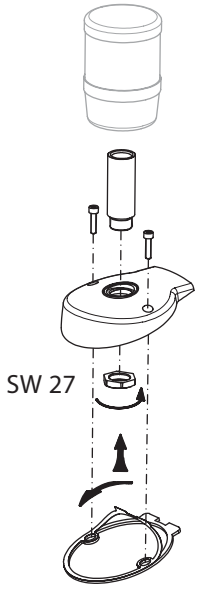

2.

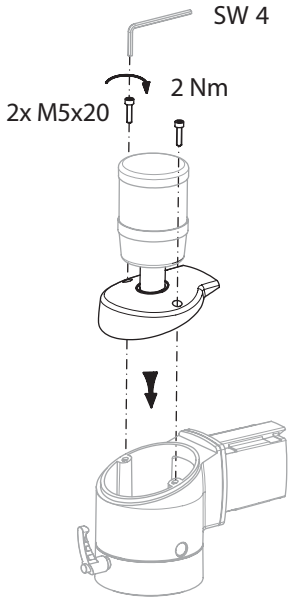

© 2023 Hoffman Enclosures Inc.

S2MLSAE	Signal light Kit

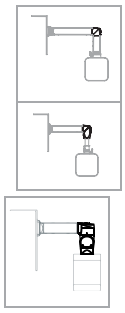

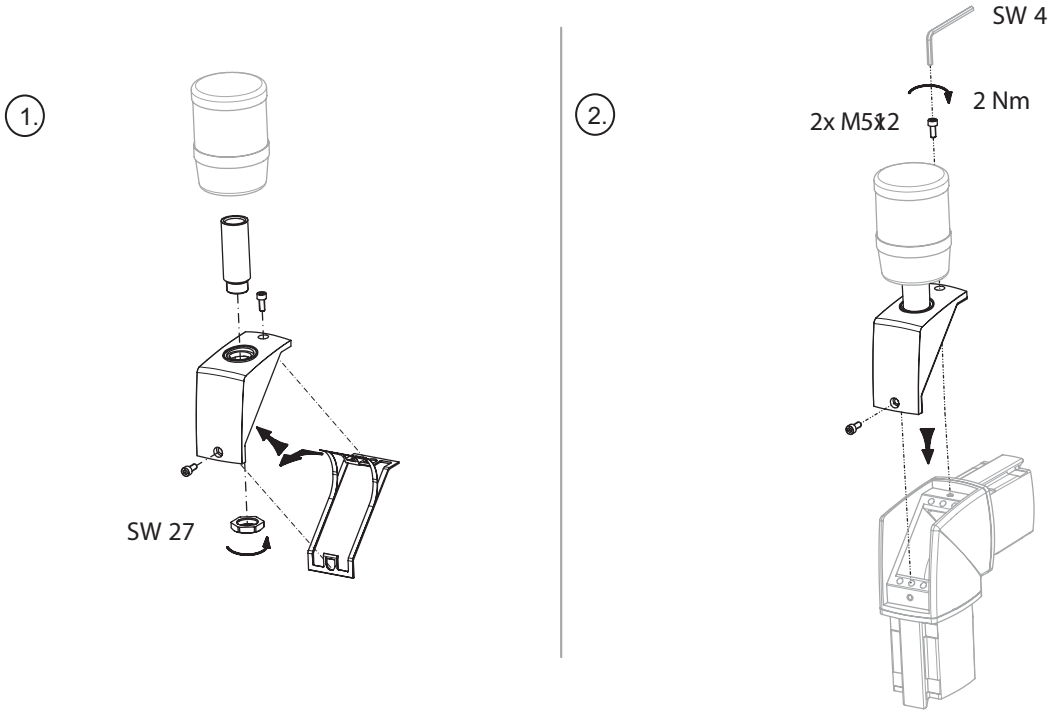

12 Mechanical Data

Material

Komponenten	GD-Al
Large base	GD-Al
Small base	Steel
Gasket	Neoprene
Plastics	PA / POM
Protection class	IP65 (except bases)

13 Load diagram SYSPEND 281-MAX

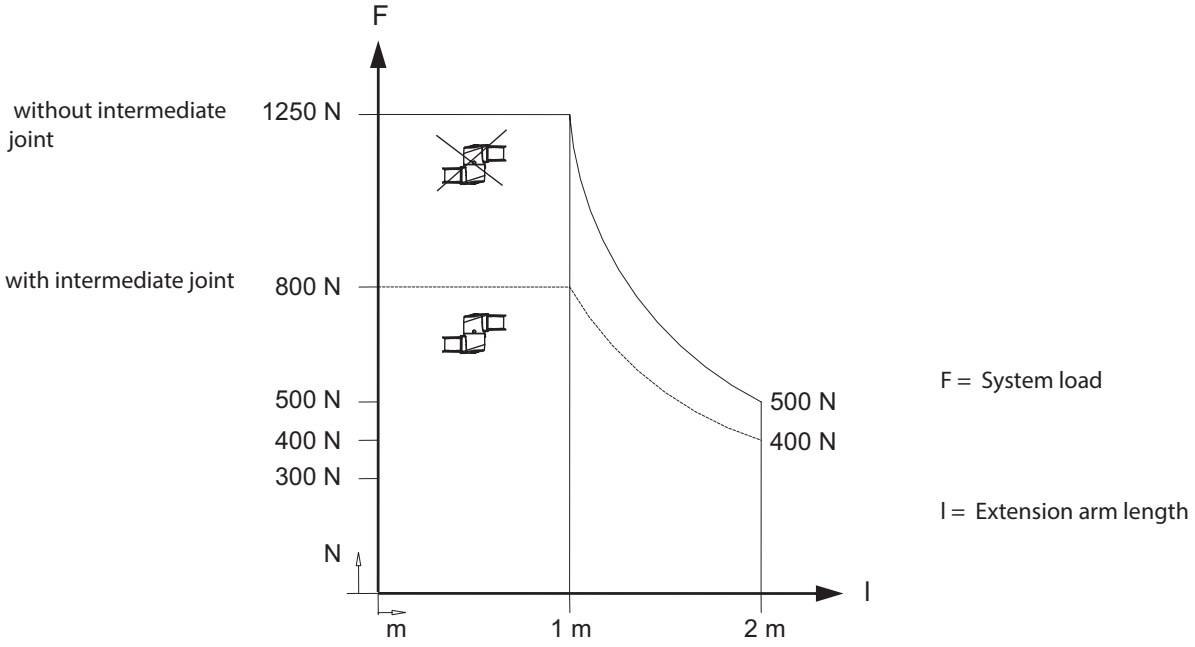

© 2023 Hoffman Enclosures Inc.

14 Tube Cutoff

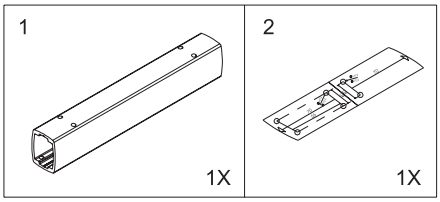

1.

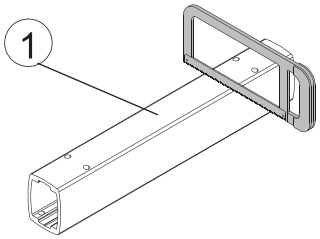

2.

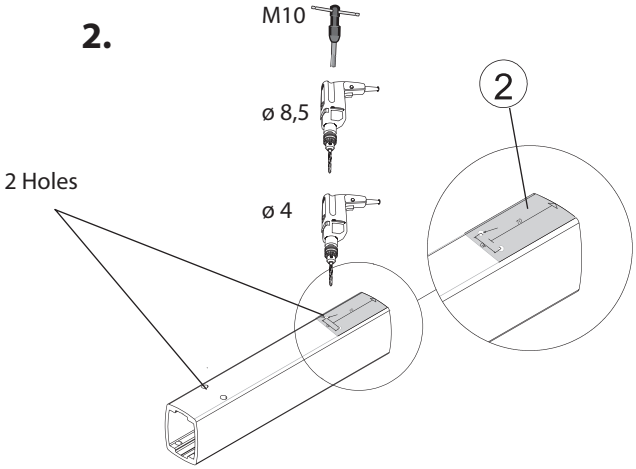

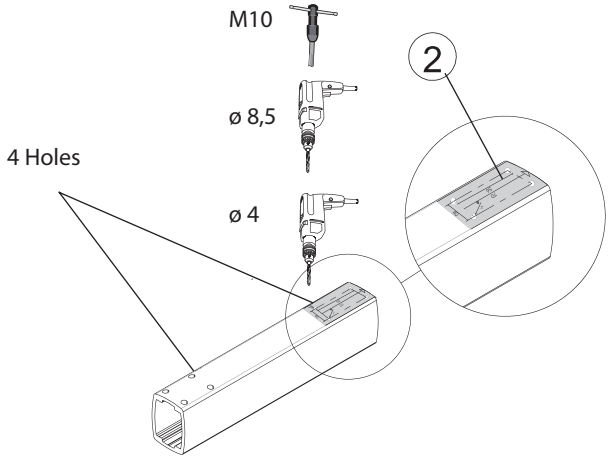

The original operating and installation instructions are the German language version.
Other languages are a translation of the original operating and installation instructions.

© 2023 Hoffman Enclosures Inc.