PROLINE FLOTEK TD TOP DUCTED SERVER CABINET

INDUSTRY STANDARDS

EIA 310-D

APPLICATION

PROLINE FLOTEK TD improves equipment efficiency and lowers energy costs by directing hot exhaust from the cabinet up above the plenum or drop ceiling and away from the cold room air. Photo shown with Tool-less (Snap-in) Blanking Panels installed. Order separately.

FEATURES

- Designed for use with 19-in. rack-mounted servers, blade servers and other equipment
- Adjustable top duct (chimney) is provided in two different standard heights to fit wihin various ceiling heights
- Chimney is pre-assembled and shipped inside the cabinet to ease assembly and avoid extra parcels and shipping damage
- S-connectors provided with chimney to facilitate connection to HVAC duct work
- Edge gasket provided with chimney to prevent hot exhaust gas from mixing with cold airflow
- Cabinet is provided with seals and blocking panels to eliminate cold air bypass
- Includes two sets of fully adjustable mounting angles which are RU marked front and back to facilitate assembly
- Open base allows under-floor cable entry
- Fully perforated front door provides unrestricted cold airflow to equipment
- Front sealed 19-in. mounting rails and top/bottom air blocking plates prevent cold air bypass
- Solid rear door directs hot exhaust into chimney to prevent mixing with cold airflow
- Efficiency increases when cold and hot airflows are kept separate resulting in higher CRAC temperatures (cold airflow to the equipment)
- Reduces overall energy needs with more efficient cold air delivery to equipment
- Allows increased thermal loads and higher server densities inside cabinet
- Can be used on raised and non-raised floors

SPECIFICATIONS

- Top sliding gland plate accommodates cables, cable bundles and pre-terminated patch panels
- Chimney provided with edge gasket and S-connectors
- Attractive, rigid front door made of aluminum extrusions and formed perforated steel, with more than 60 percent open space for free flow of cool air to equipment
- Front door is left-hinged and reversible
- Front and rear doors have keyed multi-point vault-style latch system and central key lock to ensure security
- Solid rear door is fully gasketed to ensure all hot exhaust is directed to top duct
- Front air dam surrounds mounting rack angles to prevent cold air bypass
- Top and sides are formed steel
- Rack angles have .375-in. spaced square holes per EIA standards

FINISH

RAL 9005 black textured, low-gloss polyester powder paint over pretreated steel.
Front door extrusion has a smooth, low-gloss, silver polyester power paint finish.

LOAD RATING

Static Load Rating: 2500 lb. (1134 kg)
A cabinet has a static load when:

- it is in its final, permanent, fully secured location, and
- its load is uniformly applied to the two sets of rack-mounting angles

Never move a cabinet with its maximum static load applied.
Contact Hoffman if further information is needed.

ACCESSORIES

19-in. Rack-Mount Environmental Monitor
Cable and PDU Manager
Rack- and Panel-Mount Power Distribution Units (PDUs)
Screw Packages
Tool-less (Snap-in) Blanking Panels for 19-in. Racks
Tool-less Shelf
Vertical Cable Manager 1

BULLETIN: DPVD

Standard Product

Catalog Number	AxBxC mm	AxBxC in.	H MInimum (mm)	H Minimum (in.)	H Maximum (mm)	H Maximum (in.)	Rack Units
PSTD20612BM	1991 x 608 x 1199	78.37 x 23.94 x 47.22	2600	102.36	3057	120.36	42

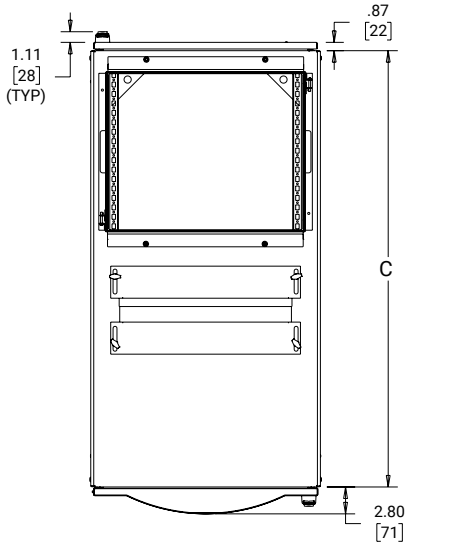

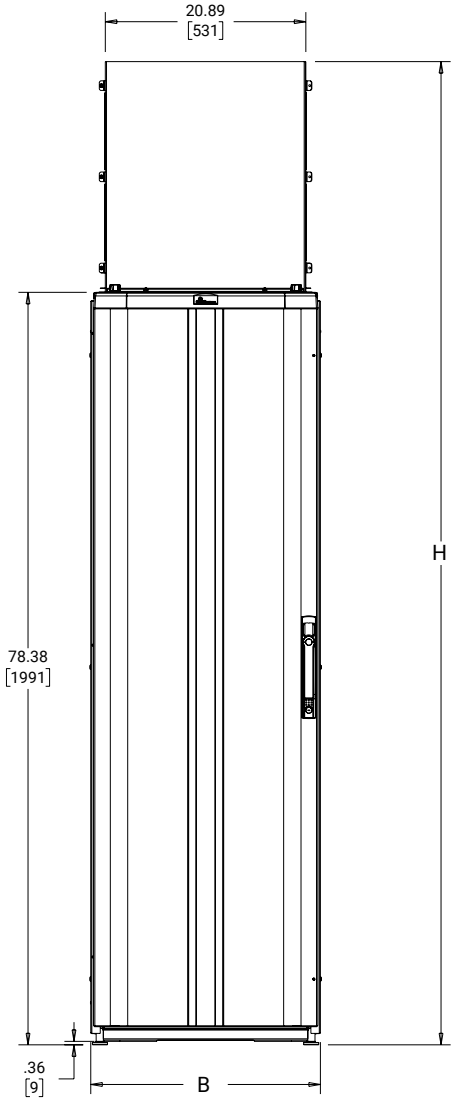

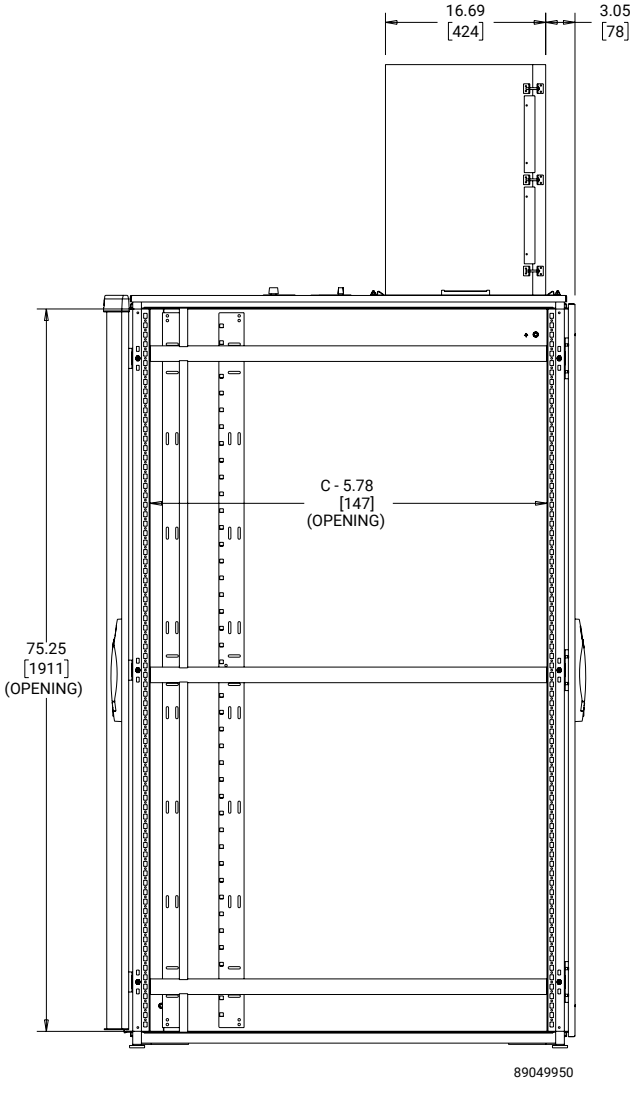

(SHOWN WITH SIDE REMOVED)

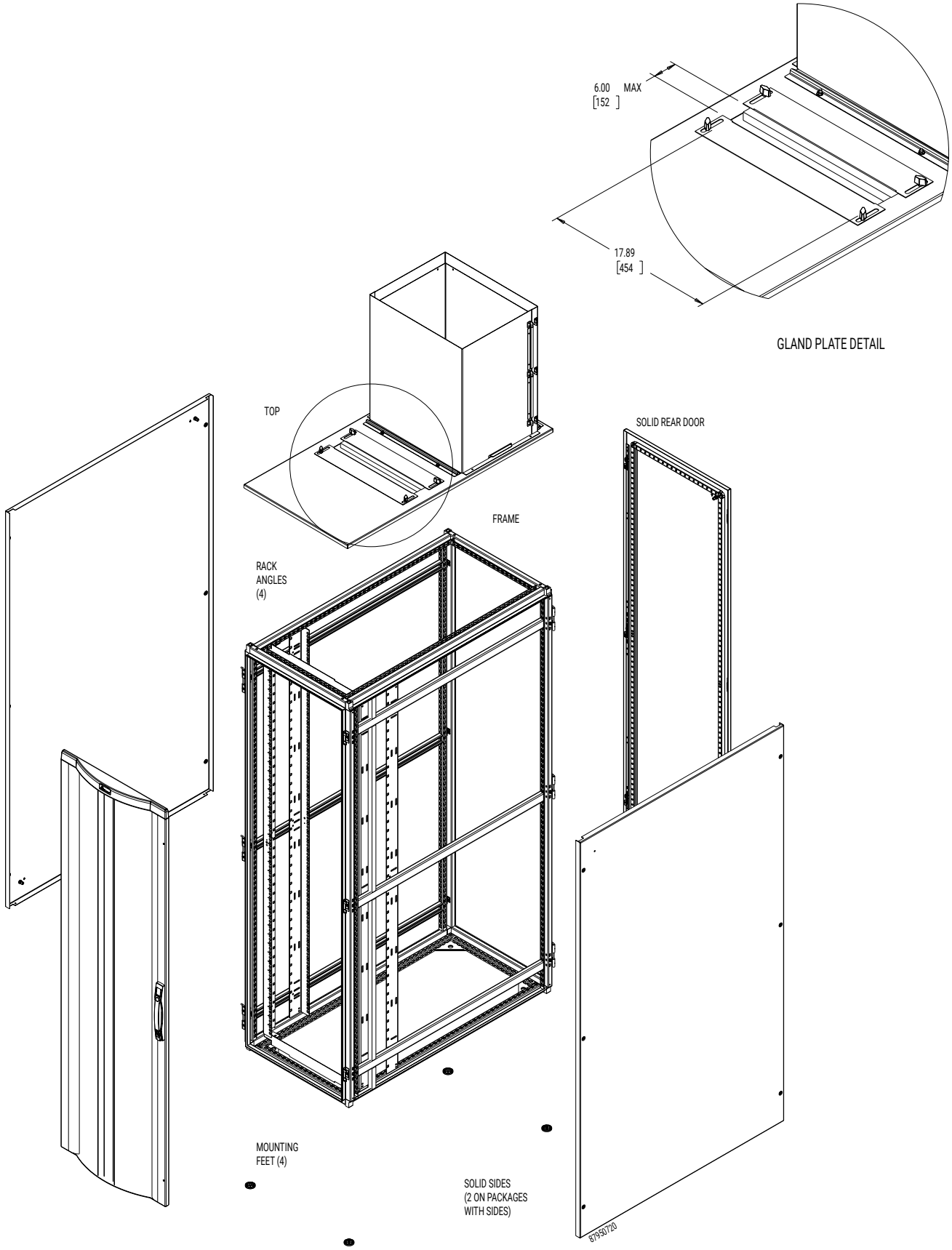
6.00 MAX
[152]
17.89
[454]
GLAND PLATE DETAIL
TOP
SOLID REAR DOOR
FRAME
RACK
ANGLES
(4)
MOUNTING
FEET (4)
SOLID SIDES
(2 ON PACKAGES
WITH SIDES)
87950720

Rear View

HVAC S Connector

Gasket

Chimney up and down positions

Front View
(purchase blanking panels separately)