SPECTRACOOL™

Plenum Adaptor, G52

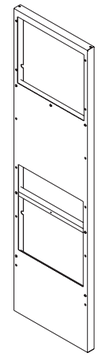

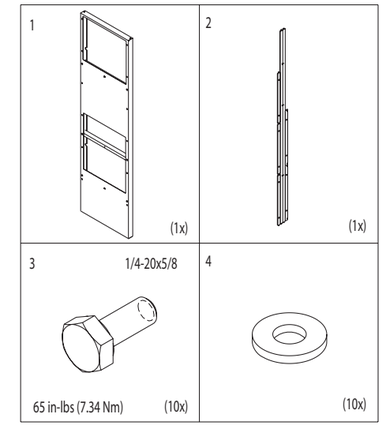

nVent
2100 Hoffman Way
Anoka, MN 55303 USA
☎ +1.763.422.2211
+1.763.576.3200

nVent.com

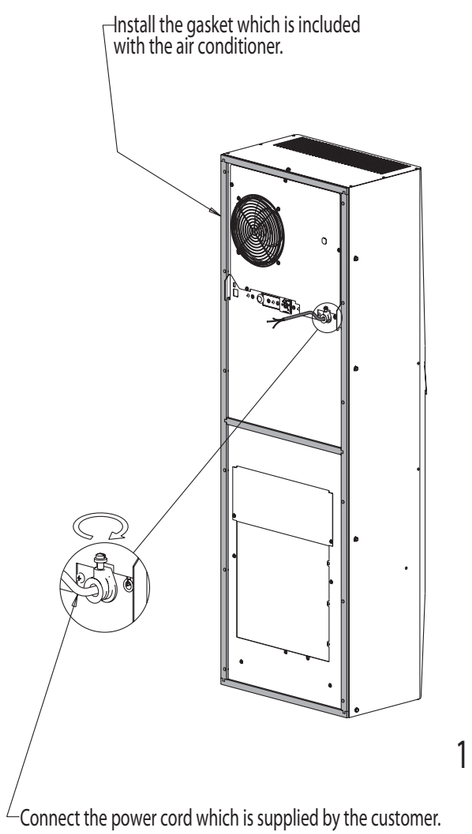

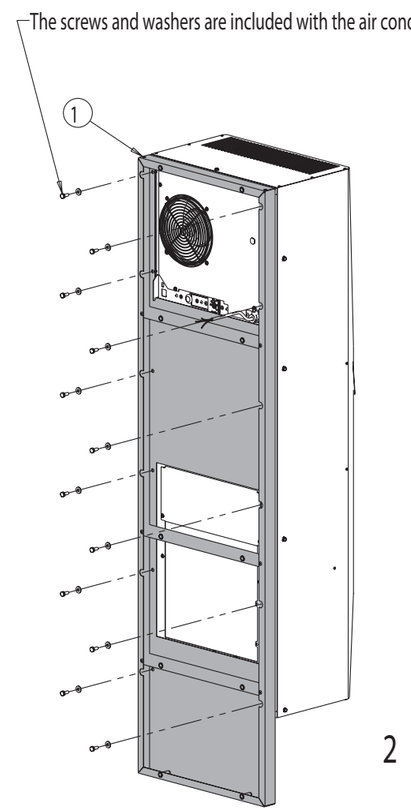

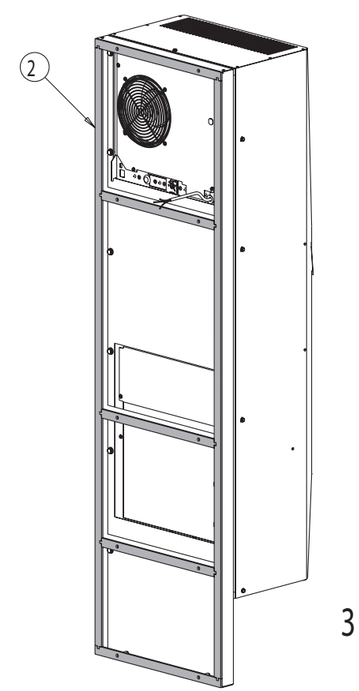

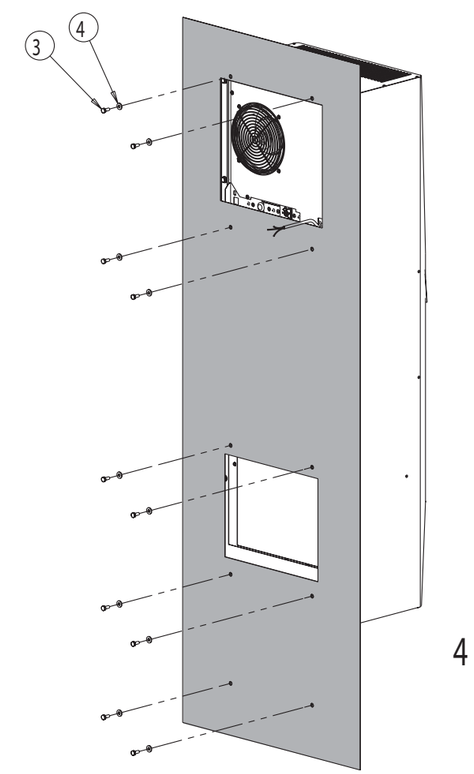

For warranty information, please reference the following web address:
https://hoffman.nvent.com/en/hoffman/warranty-information

Rev. F

© 2018 nVent

P/N 89091688

89093206