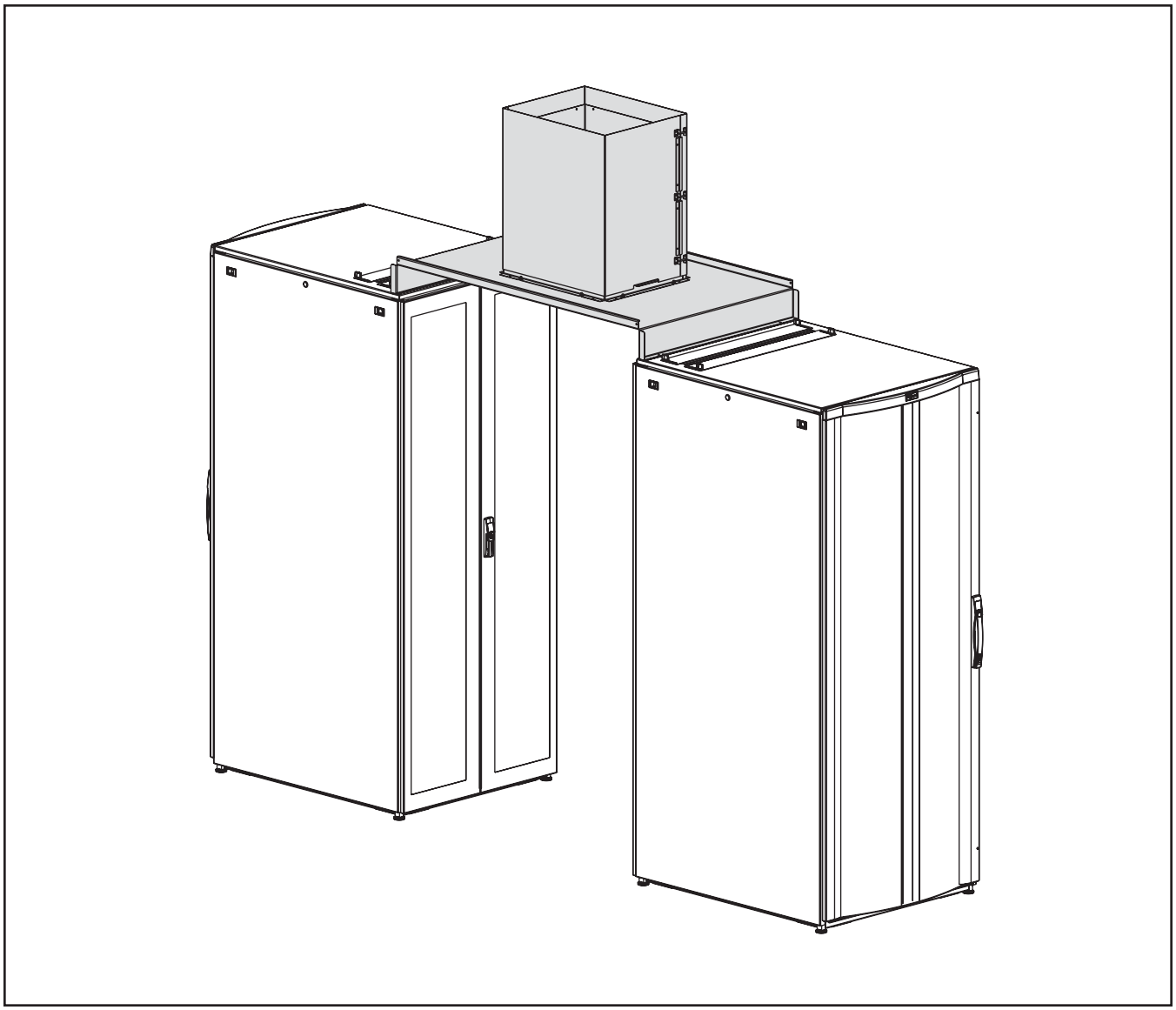

© 2018 Hoffman Enclosures Inc.

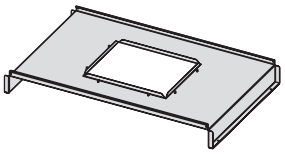

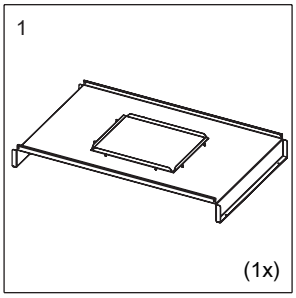

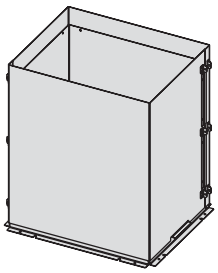

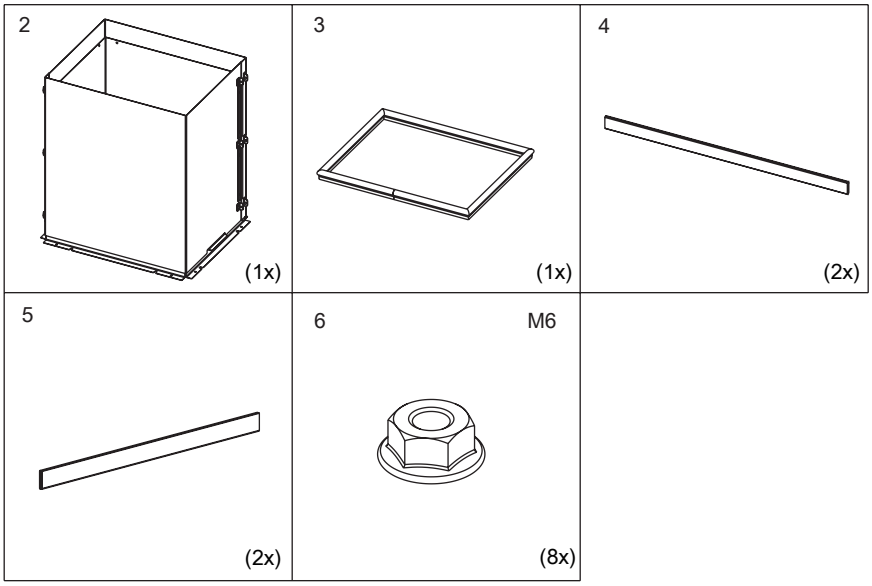

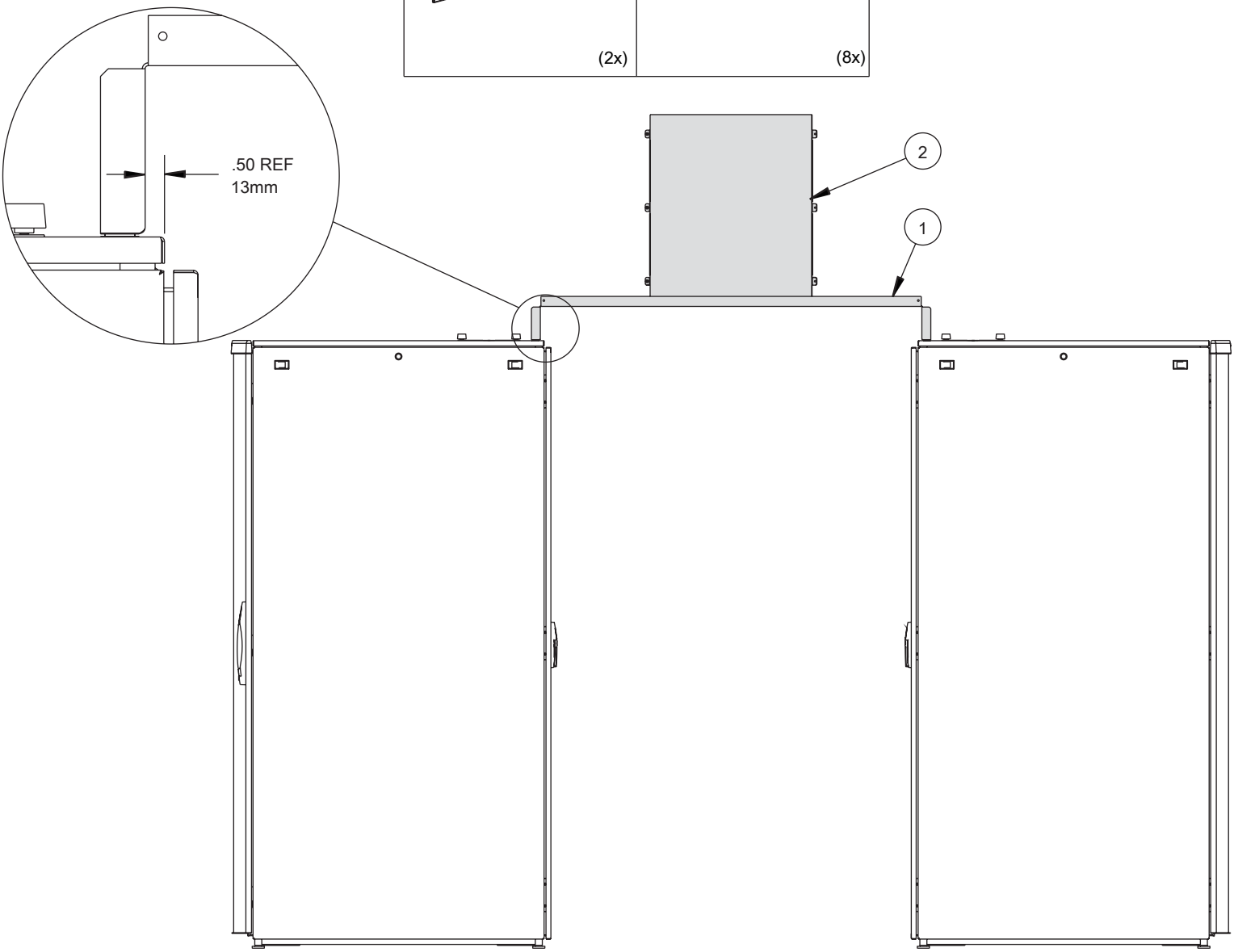

© 2018 Hoffman Enclosures Inc.

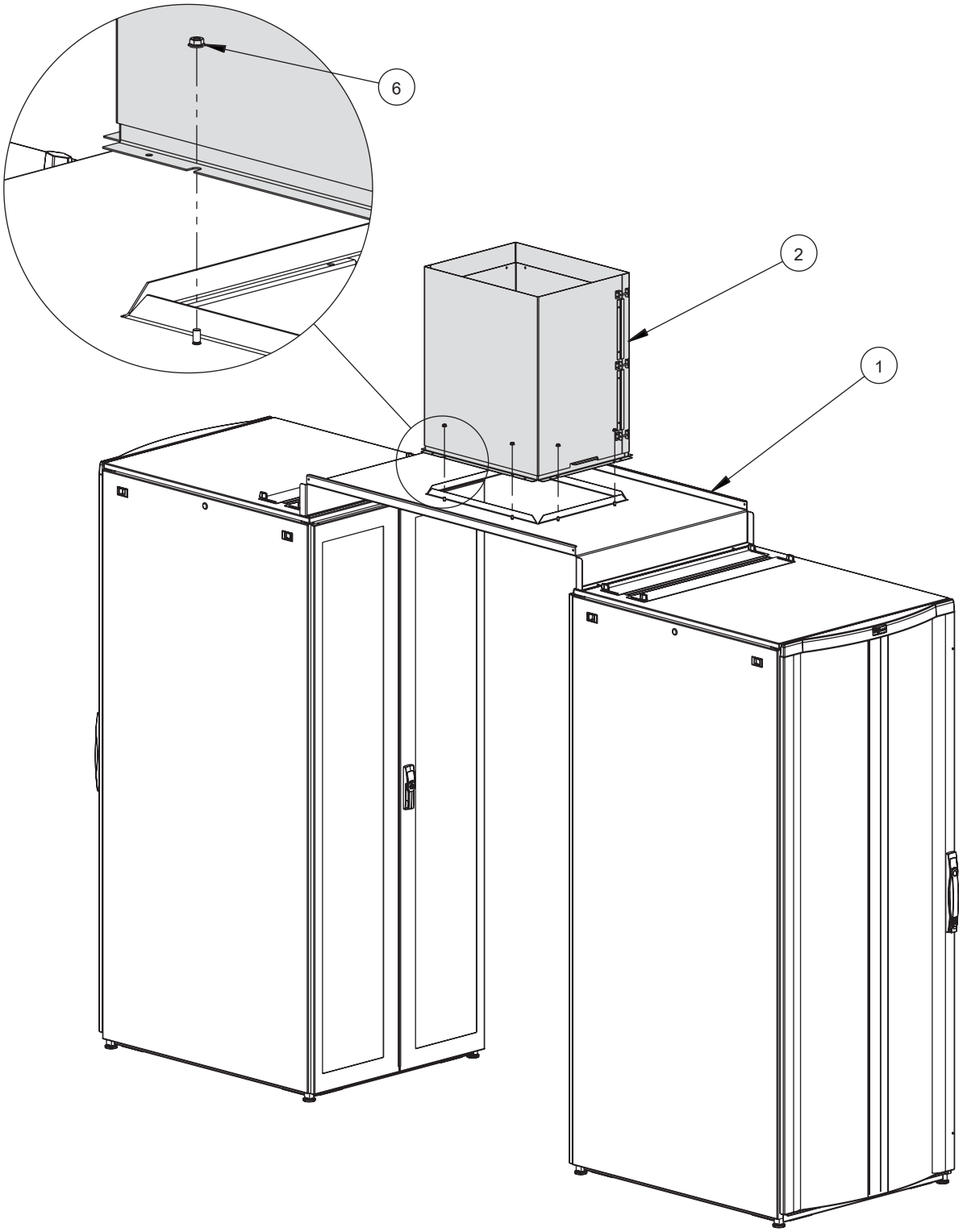

© 2018 Hoffman Enclosures Inc.

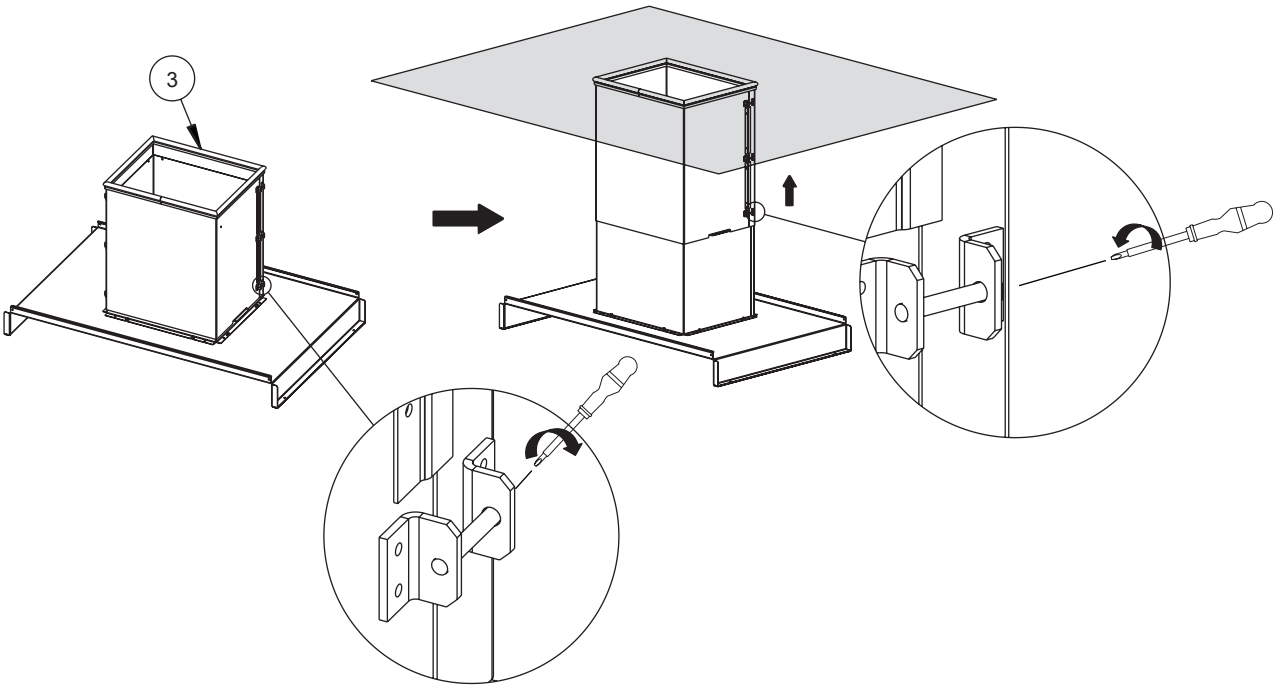

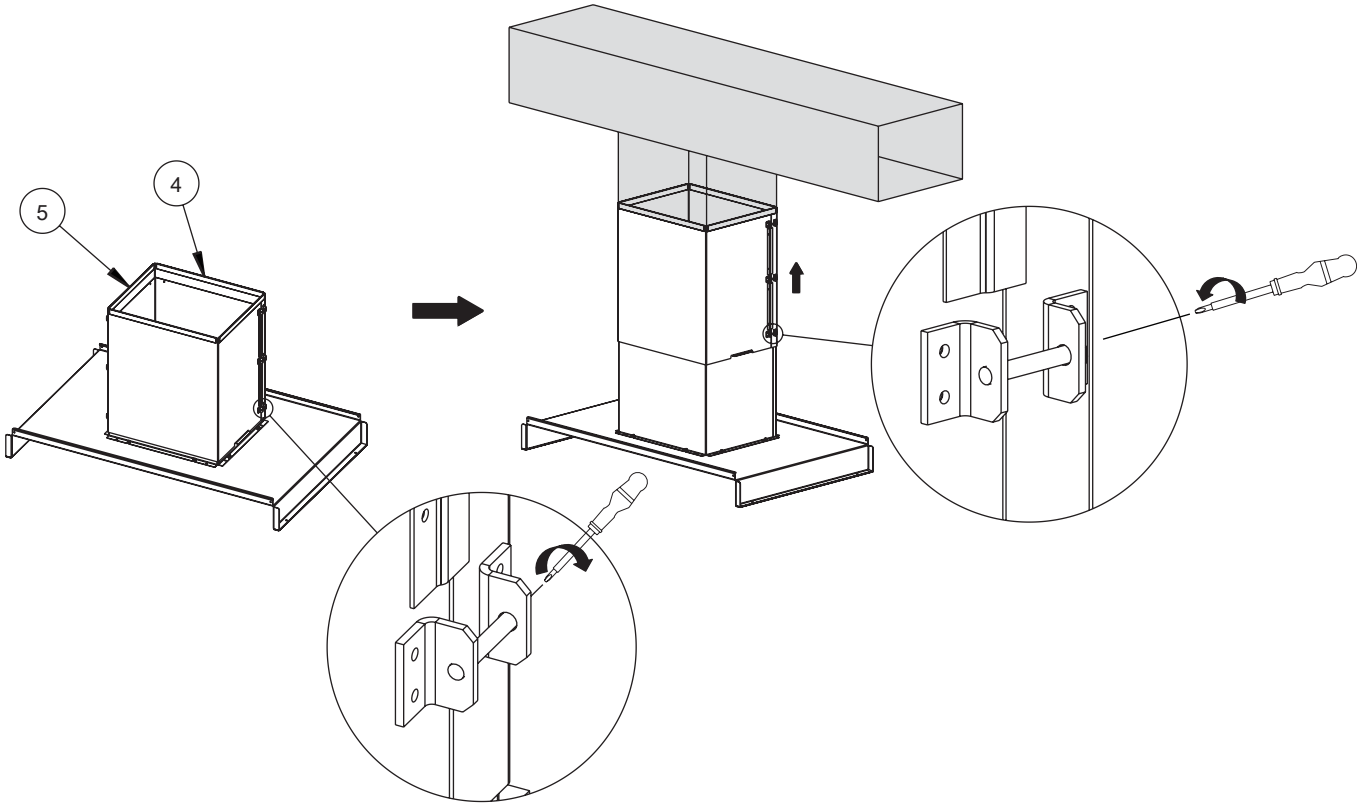

© 2018 Hoffman Enclosures Inc.