SYSPEND 180-MAX SUSPENSION SYSTEM, TYPE 12

INDUSTRY STANDARDS

Maintains NEMA Type 12 and IEC IP65 enclosure rating when properly installed per nVent HOFFMAN instructions.

APPLICATION

The SYSPEND 180-MAX is a modular enclosure suspension system designed for modern industrial aesthetics, excellent ergonomics and multiple component combinations. The easy-to-install components can be configured in a variety of ways to get the right combination for any application. At 3.3 ft. (1 m) the system supports up to 180 lb. (81.6 kg). Recommended for use with CC2000, CC4000, and CONCEPT HMI enclosures.

FEATURES

- System supports up to 180 lb. (82 kg) and allows operators to easily move controls in and out of position
- Multiple modular components available to provide ergonomic, fatigue-free operation
- Clean lines and smooth transitions between tubes and system components provide attractive aesthetics and allow for ease of cleaning
- Tubing provides structural integrity and acts as equipment wiring conduit
- Secure attachment with sixfold positive connection between tubes and components along with recessed mounting areas in components; no additional safety drilling required
- Secure connections and easy adjustment of system alignment using tube setscrews coated with thread sealer
- System design allows for user friendly readjustment and leveling without disassembling the complete system or additional kits
- Multiple tube lengths offer system design versatility
- Heavy-duty bearings in all movable joints for convenient, smooth operation and enhanced durability to withstand stresses of repeated use
- Variable torque adjustment available for all rotating components; general adjustment at bearing with locking handle adjustment on enclosure couplings
- Panel couplings allow for connection at the rear of displays or monitors with VESA mounting
- System can be combined with the SYSPEND 281-MAX using the Reduction Elbow to achieve a higher load rating

SPECIFICATIONS

- Anodized aluminum tubes
- Choice of RAL 9005 black or RAL 7035 light-gray die-cast aluminum components
- RAL 9006 white aluminum cable access caps
- Oil-resistant neoprene gaskets

SYSTEM LOAD CAPACITY

The SYSPEND 180-MAX load graph is the result of load capacity tests. Please contact Hoffman for specific application information.

Load Diagram

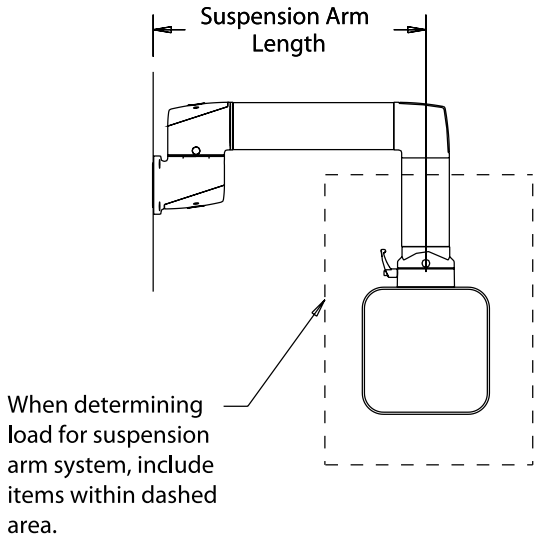

Load Diagram for Static Load Capacity

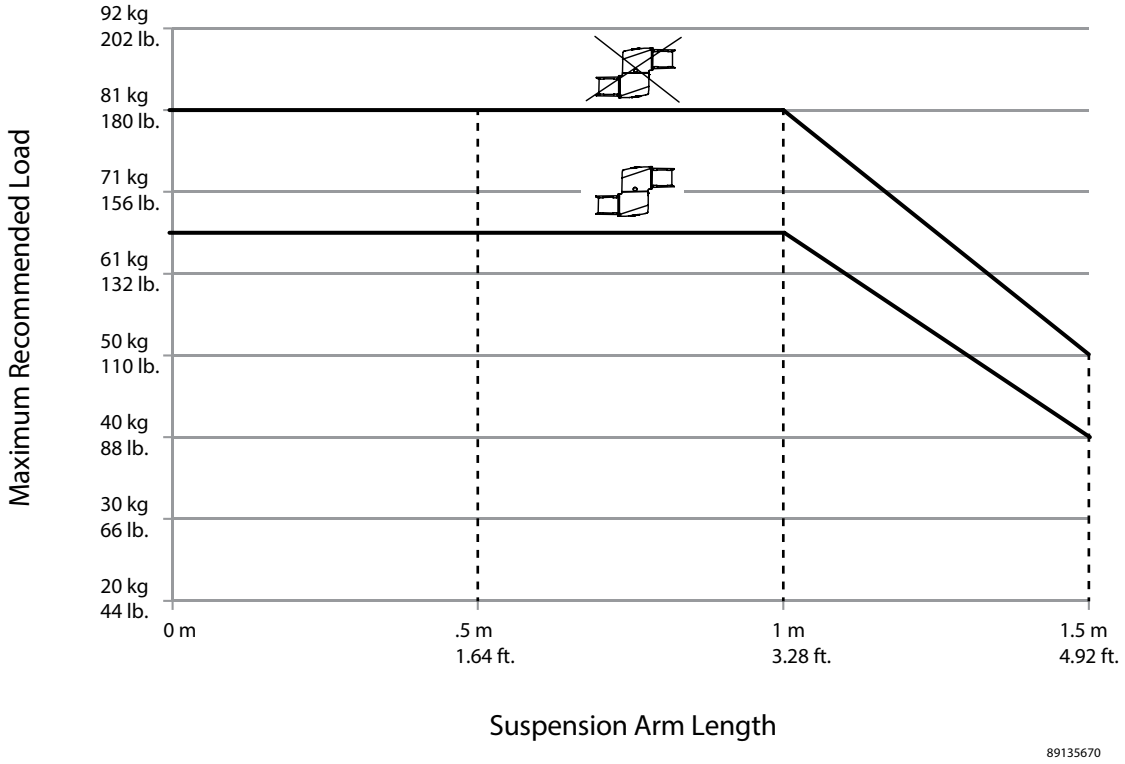

TUBES

Aluminum tubes provide structural integrity and act as conduit for equipment wiring. Tubes attach to system components with 6 setscrews on each end of the tube. Setscrews are provided with system couplings, not the tubes. Setscrews allow for easy adjustment and leveling of the system. Setscrews are provided with thread sealer providing secure connections. Available in 6 standard lengths ranging from 250 mm (9.84) to 1500 mm (59.05). Tubes 750 mm (29.53) and longer include drilling template to assist with drilling and tapping the holes when tube is cut to length.

BULLETIN: CS5

Catalog Number	Color	L mm/in.	Weight (lb.)	Weight (kg)
S1MT250	Anodized	250 9.84	1.75	.79
S1MT500	Anodized	500 19.68	3.50	1.59
S1MT750	Anodized	750 29.53	5.25	2.38
S1MT1000	Anodized	1000 39.37	7.00	3.18
S1MT1250	Anodized	1250 49.21	8.75	3.97
S1MT1500	Anodized	1500 59.05	10.50	4.76

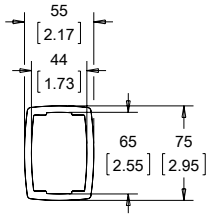

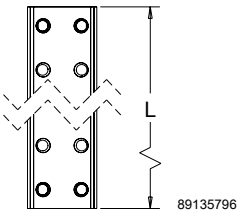

NARROW ADAPTER

The Narrow Adapter can be attached to the Flange Coupling and Flange Elbow Coupling to create a narrower connection to an enclosure. Specifically designed for use with the SYSPEND ALUMINUM HMI Enclosures that have 66mm of usable space. Does not inhibit coupling functionality. Die-cast aluminum construction. Choice of RAL 9005 black or RAL 7035 light gray finish. Includes installation instructions, gaskets, and mounting hardware.

BULLETIN: CS5

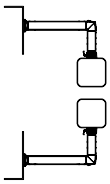

Catalog Number	Color	Weight (lb.)	Weight (kg)
S1MA	RAL 9005, Black	0.5	0.25
S1MAG	RAL 7035, Light Gray	0.5	0.25

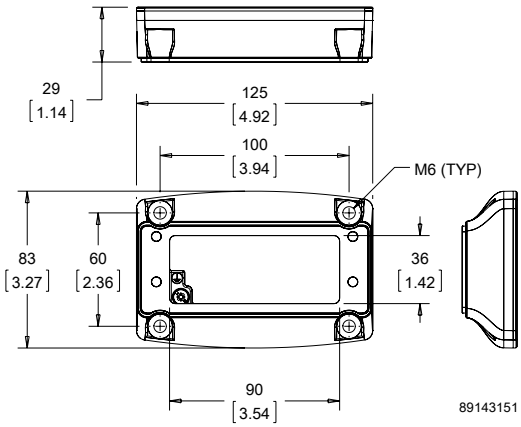

FLANGE COUPLING

The flange coupling attaches a tube to the enclosure, enabling 300-degree enclosure rotation and can be locked into a given position. The flange coupling has a safety stop and maintenance-free bearings. Die-cast aluminum construction. Choice of RAL 9005 black or RAL 7035 light gray finish. Includes installation instructions, gaskets, tube setscrews and enclosure mounting hardware.

BULLETIN: CS5

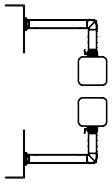

Catalog Number	Color	Weight (lb.)	Weight (kg)
S1MFC	RAL 9005, Black	3.50	1.59
S1MFCG	RAL 7035, Light Gray	3.50	1.59

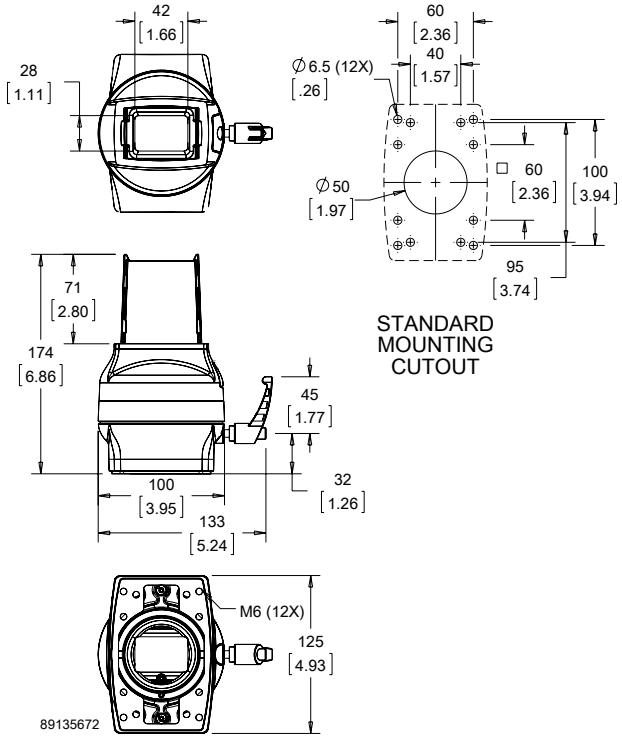

FLANGE ELBOW COUPLING

The flange elbow coupling attaches directly to the enclosure for applications where a vertical tube is not required. It enables the enclosure to rotate 300 degrees and can be locked into a given position. The flange elbow coupling has a safety stop and maintenance-free bearings. Die-cast aluminum construction. Choice of RAL 9005 black or RAL 7035 light gray finish. Includes installation instructions, gaskets, tube setscrews and enclosure mounting hardware.

BULLETIN: CS5

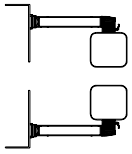

Catalog Number	Color	Weight (lb.)	Weight (kg)
S1MFEC	RAL 9005, Black	4.50	2.04
S1MFECG	RAL 7035, Light Gray	4.50	2.04

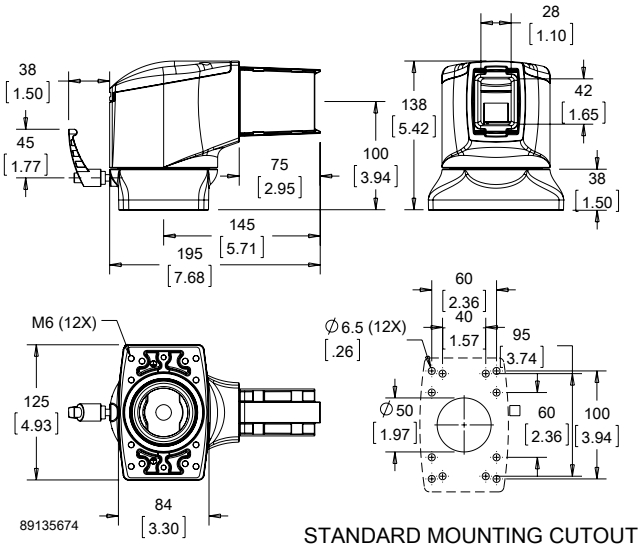

HORIZONTAL PANEL COUPLING

The horizontal panel coupling mounts a horizontal tube to the back of an enclosure or screen using Video Electronics Standards Association (VESA) mounting. The coupling has mounting holes drilled for standard VESA 75 and 100 flange sizes. It enables the enclosure to rotate 300 degrees and can be locked into a given position. The horizontal panel coupling has a safety stop and maintenance-free bearings. Die-cast aluminum construction. Choice of RAL 9005 black or RAL 7035 light gray finish. Includes installation instructions, gaskets, tube setscrews and enclosure mounting hardware.

BULLETIN: CS5

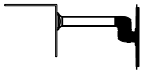

Catalog Number	Color	Weight (lb.)	Weight (kg)
S1MPCH	RAL 9005, Black	6.50	2.95
S1MPCHG	RAL 7035, Light Gray	6.50	2.95

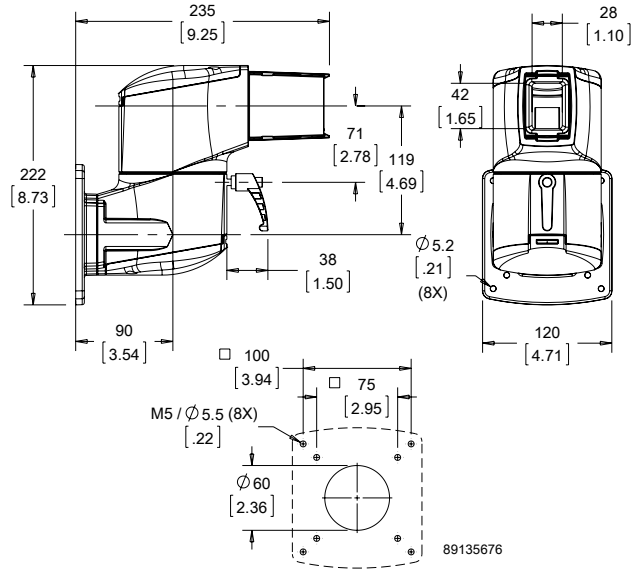

STANDARD MOUNTING CUTOUT

VERTICAL PANEL COUPLING

The vertical panel coupling mounts a vertical tube to the back of an enclosure or screen using Video Electronics Standards Association (VESA) mounting. The coupling has mounting holes drilled for standard VESA 75 and 100 flange sizes. It enables the enclosure to rotate 300 degrees and can be locked into a given position. The vertical panel coupling has a safety stop and maintenance-free bearings. Die-cast aluminum construction. Choice of RAL 9005 black or RAL 7035 light gray finish. Includes installation instructions, gaskets, tube setscrews and enclosure mounting hardware.

BULLETIN: CS5

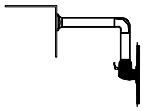

Catalog Number	Color	Weight (lb.)	Weight (kg)
S1MPCV	RAL 9005, Black	5.50	2.49
S1MPCVG	RAL 7035, Light Gray	5.50	2.49

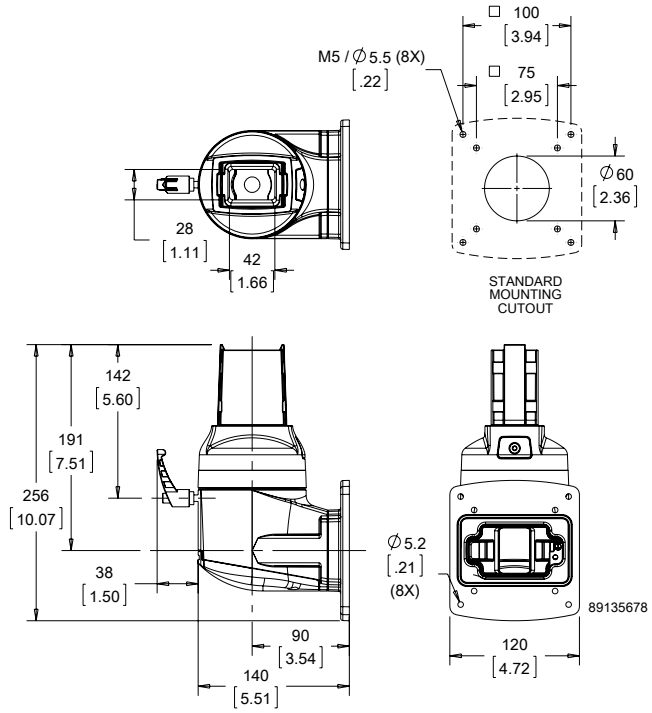

SWIVEL TILT COUPLING VERTICAL

Syspend 180-MAX Swivel Tilt Coupling Vertical allows connection of panels, displays, and enclosures that can be mounted from the top or bottom. Rotation angle 300 degrees with stop. Tilt angle with adjustable stop +/- 105 degrees (without attachments). Screwed mounting opening, suitable for feed-through of DVI connectors.

BULLETIN: CS5

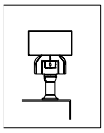

89230121

Catalog Number	Color	Weight (lb.)	Weight (kg)
S1MSCV	RAL 9005, Black	10.25	4.6

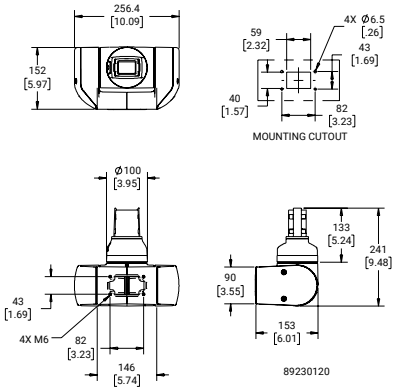

SWIVEL TILT COUPLING HORIZONTAL

Syspend 180-MAX Swivel Tilt Coupling Horizontal allows connection of panels, displays, and enclosures that can be mounted from the top or bottom. Rotation angle 300 degrees with stop. Tilt angle with adjustable stop +/- 105 degrees (without attachments). Screwed mounting opening, suitable for feed-through of DVI connectors.

BULLETIN: CS5

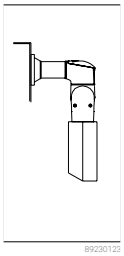

89230123

Catalog Number	Color	Weight (lb.)	Weight (kg)
S1MSCH	RAL 9005, Black	11.18	5.1

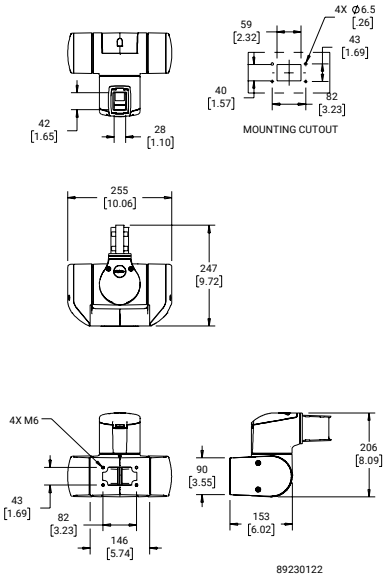

INTERMEDIATE JOINT

Use an intermediate joint to join two horizontal tubes together for a longer length. The arm can be rotated 300 degrees. Includes safety stop and maintenance-free bearings. Die-cast aluminum construction. Choice of RAL 9005 black or RAL 7035 light gray finish. Includes installation instructions, gaskets, and tube setscrews.

Use of the intermediate joint reduces the system load rating capacity to 146 lb. (66 kg) at 3.3 ft. (1 m).

BULLETIN: CS5

Catalog Number	Color	Weight (lb.)	Weight (kg)
S1MIJ	RAL 9005, Black	6.00	2.72
S1MIJG	RAL 7035, Light Gray	6.00	2.72

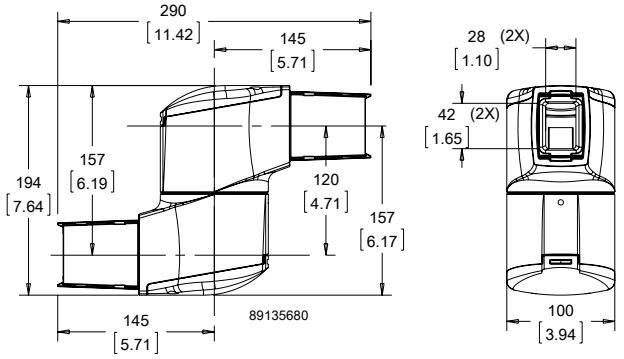

ELBOW

The elbow provides a 90-degree bend in the suspension system. Die-cast aluminum construction. Choice of RAL 9005 black or RAL 7035 light gray finish. Includes installation instructions, gaskets, and tube setscrews.

BULLETIN: CS5

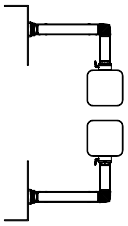

Catalog Number	Color	Weight (lb.)	Weight (kg)
S1ME	RAL 9005, Black	2.75	1.25
S1MEG	RAL 7035, Light Gray	2.75	1.25

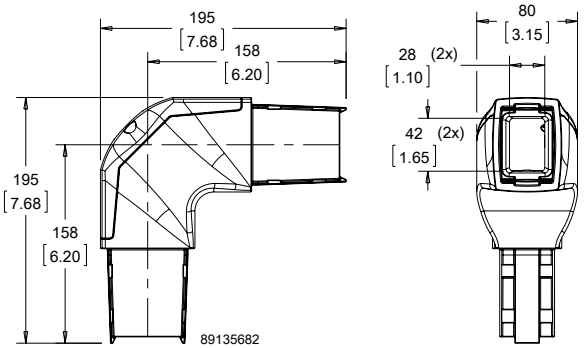

ROTATABLE ELBOW

The rotatable elbow provides a 90-degree bend in the suspension system and allows the vertical tube to rotate 300 degrees. Includes safety stop and maintenance-free bearings. Die-cast aluminum construction. Choice of RAL 9005 black or RAL 7035 light gray finish. Includes installation instructions, gaskets, and tube setscrews.

BULLETIN: CS5

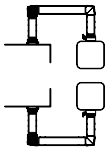

Catalog Number	Color	Weight (lb.)	Weight (kg)
S1MER	RAL 9005, Black	5.00	2.27
S1MERG	RAL 7035, Light Gray	5.00	2.27

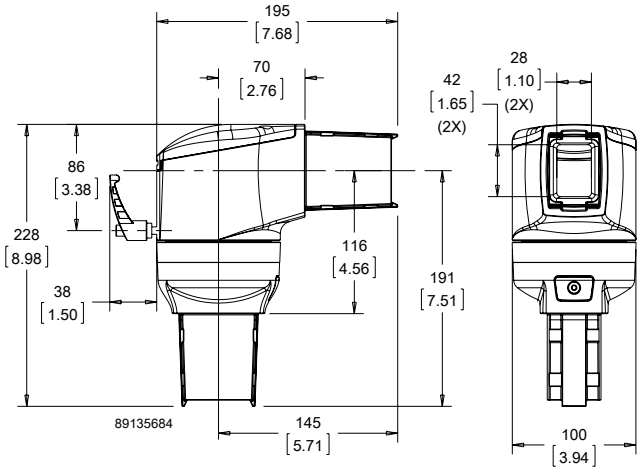

REDUCTION ELBOW

The reduction elbow provides a 90-degree bend in the suspension system between the horizontal tube and base connection of the SYSPEND 281-MAX system and the vertical components of the SYSPEND 180-MAX system. Die-cast aluminum construction. Available in RAL 9005 black finish only. Includes installation instructions, gaskets, and tube setscrews.

Use of the reduction elbow with the SYSPEND 281-MAX base and tube increases the system load rating to 281 lb. (127 kg) at 3.3 ft. (1 m).

BULLETIN: CS5

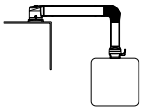

Catalog Number	Color	Weight (lb.)	Weight (kg)
S1MRE	RAL 9005, Black	4.00	1.81

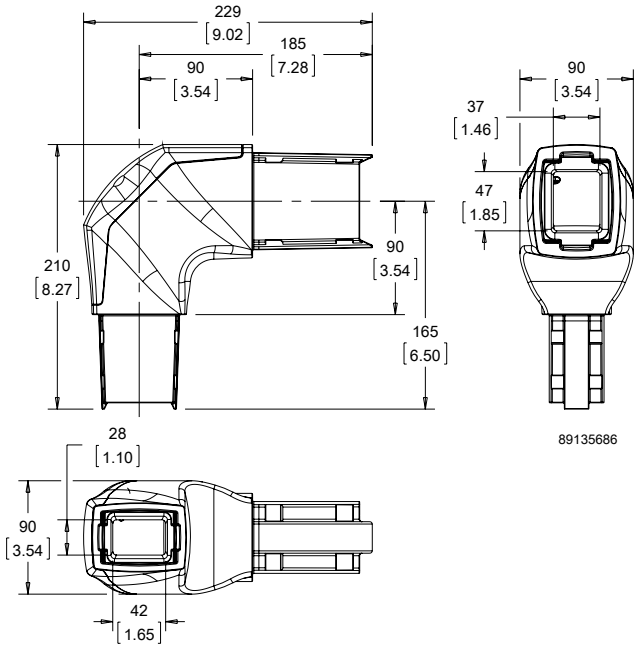

SET-UP JOINT

The set-up joint mounts the suspension system to a horizontal surface. The arm can be rotated 300 degrees. Includes a safety stop and maintenance-free bearings. Die-cast aluminum construction. Choice of RAL 9005 black or RAL 7035 light gray finish. Includes installation instructions, gaskets, and tube setscrews. Surface mounting hardware not provided.

BULLETIN: CS5

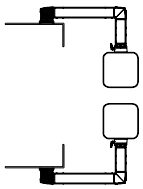

Catalog Number	Color	Weight (lb.)	Weight (kg)
S1MSJ	RAL 9005, Black	4.75	2.15
S1MSJG	RAL 7035, Light Gray	4.75	2.15

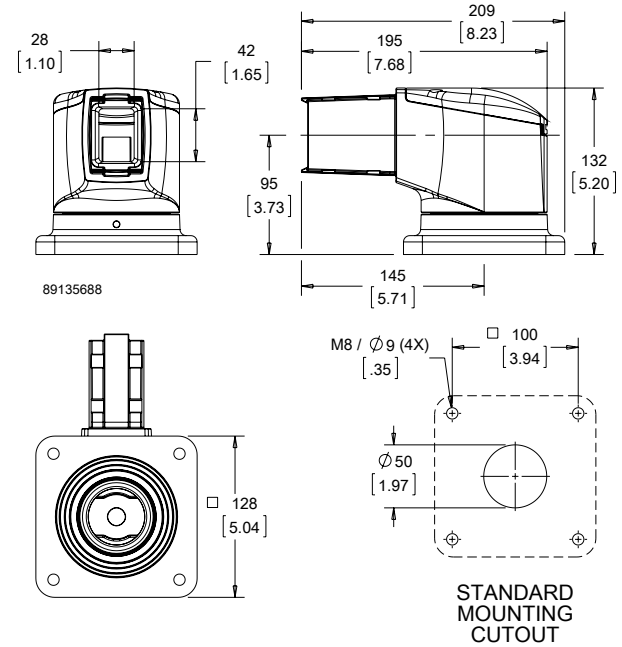

ROTARY BASE

The rotatable base bracket allows the entire suspension system to rotate at the point of attachment on a horizontal surface. The arm can be rotated 300 degrees. Includes a safety stop and maintenance-free bearings. Die-cast aluminum construction. Choice of RAL 9005 black or RAL 7035 light gray finish. Includes installation instructions, gaskets, and tube setscrews. Surface mounting hardware not provided.

BULLETIN: CS5

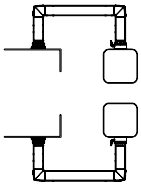

Catalog Number	Color	Weight (lb.)	Weight (kg)
S1MTBB	RAL 9005, Black	3.75	1.70
S1MTBBG	RAL 7035, Light Gray	3.75	1.70

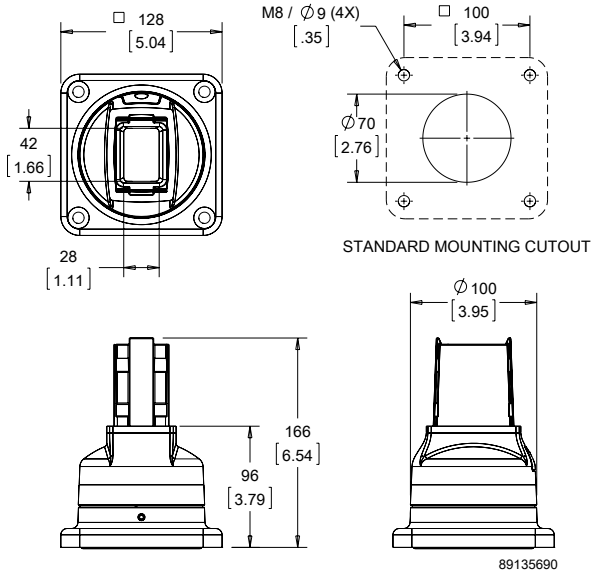

WALL FLANGE

The wall flange allows for fixed positioning on a horizontal or vertical surface when rotation is not needed. Die-cast aluminum construction. Choice of RAL 9005 black or RAL 7035 light gray finish. Includes installation instructions, gaskets, and tube setscrews. Surface mounting hardware not provided.

BULLETIN: CS5

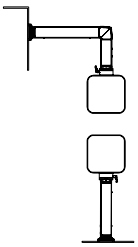

Catalog Number	Color	Weight (lb.)	Weight (kg)
S1MWF	RAL 9005, Black	2.00	.91
S1MWFG	RAL 7035, Light Gray	2.00	.91

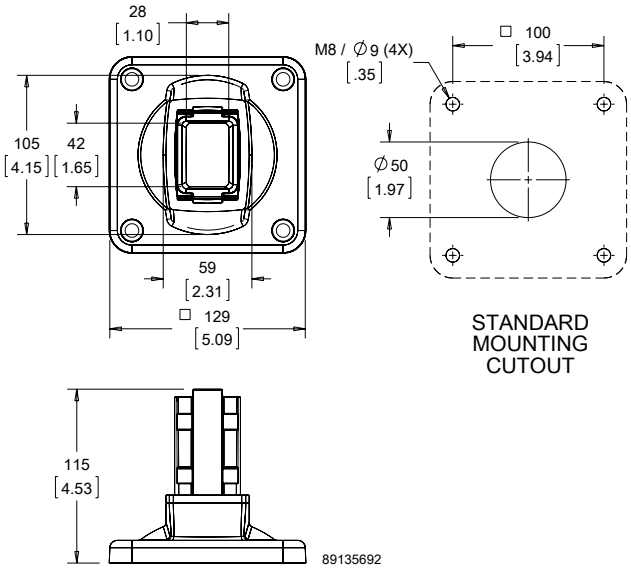

HORIZONTAL WALL JOINT

The horizontal wall joint mounts the suspension system to a vertical surface, allowing the tube to extend horizontally. The arm can be rotated 300 degrees. Includes a safety stop and maintenance-free bearings. Die-cast aluminum construction. Choice of RAL 9005 black or RAL 7035 light gray finish. Includes installation instructions, gaskets, and tube setscrews. Surface mounting hardware not provided.

BULLETIN: CS5

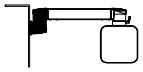

Catalog Number	Color	Weight (lb.)	Weight (kg)
S1MWJH	RAL 9005, Black	6.50	2.95
S1MWJHG	RAL 7035, Light Gray	6.50	2.95

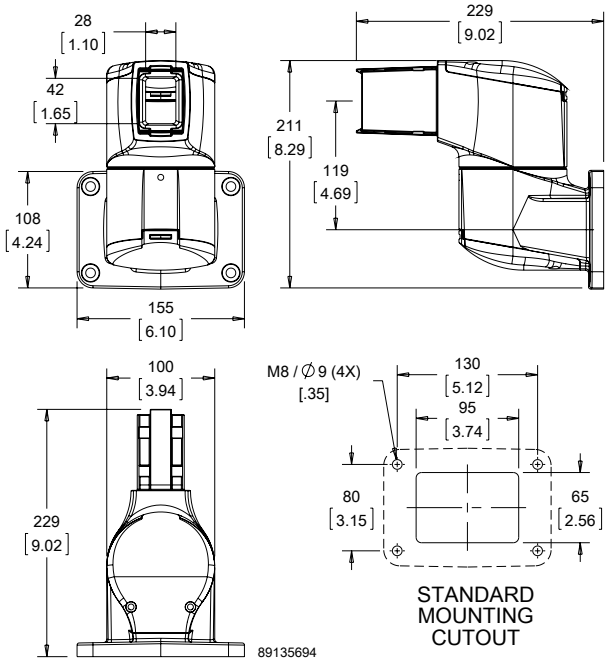

VERTICAL WALL JOINT

The vertical wall joint mounts the suspension system to a vertical surface, allowing the tube to extend vertically. The arm can be rotated 300 degrees. Includes a safety stop and maintenance-free bearings. Die-cast aluminum construction. Choice of RAL 9005 black or RAL 7035 light gray finish. Includes installation instructions, gaskets, and tube setscrews. Surface mounting hardware not provided.

BULLETIN: CS5

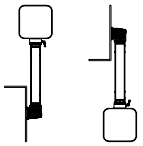

Catalog Number	Color	Weight (lb.)	Weight (kg)
S1MWJV	RAL 9005, Black	5.50	2.49
S1MWJVG	RAL 7035, Light Gray	5.50	2.49

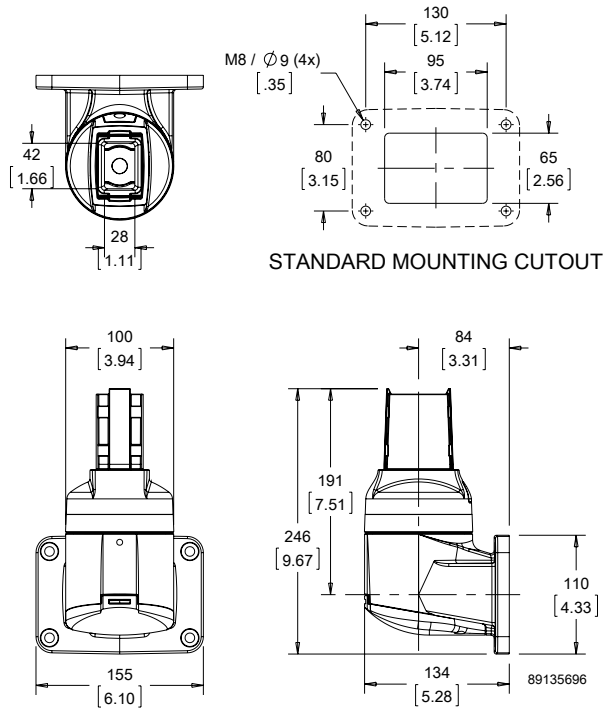

SYSPEND 180/281-MAX FLEX BASE ADAPTER PLATE

Syspend 180/281-MAX Flex Base Adapter Plate is attached to the Flex Base to allow connection with the Syspend 180/281-MAX tubes. Assembled Syspend 180 HMI Arm System has a max weight load of 180 lb. (81.6 kg). Assembled Syspend 281 HMI Arm System has a max weight load of 281 lb. (127.7 kg).

BULLETIN: CS4

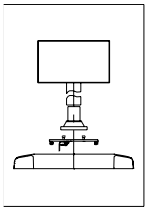

Catalog Number	Weight (lb.)
S2MSYSAPG	7.41

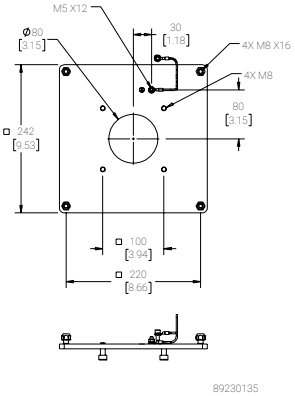

ROTATION LIMITER

Rotation limiters are a retrofit option to limit the rotation of couplings and joints which normally rotate 300 degrees. Each block limits rotation 30 degrees. Kit includes six rotation limiting blocks and installation instructions.

BULLETIN: CS5

Catalog Number	Qty.
S1MRL	6

SIGNAL LIGHT ADAPTERS

The signal light adapters are available in either round, elbow and reduction elbow cover versions and provide a means for attaching signal lights. Signal lights are not included. Aluminum caps are finished in RAL 9006 white aluminum powder paint. Includes caps, gasket, attachment hardware, and post.

BULLETIN: CS5

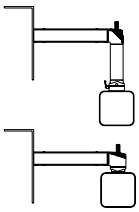

Catalog Number	Description	Color	Weight (lb.)	Weight (kg)
S1MSLAR	Round Cap	RAL 9006, White Aluminum	.53	.24
S1MSLAA	Angled Cap	RAL 9006, White Aluminum	.58	.26
S1MSLARE	Reduction Elbow Cap	RAL 9006, White Aluminum	.74	.34

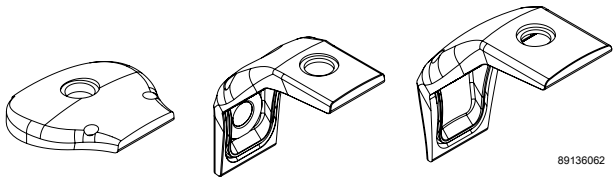

S1MSLAR S1MSLAA S1MSLARE

REPLACEMENT CAPS

Replacement Caps for SYSPEND 180-MAX couplings are available in either round, elbow or reduction elbow versions. The hardware is included. The caps are aluminum finished in RAL 9006 white aluminum powder paint.

BULLETIN: CS5

Catalog Number	Description	Color	Weight (lb.)	Weight (kg)
S1MRCRK	Round Cap	RAL 9006 White Aluminum	.40	.18
S1MRCAK	Angled Cap	RAL 9006 White Aluminum	.40	.18
S1MRCREK	Reduction Elbow Cap	RAL 9006 White Aluminum	.40	.18

REPLACEMENT HARDWARE KIT

The replacement hardware kit includes spare parts necessary within the SYSPEND 180-MAX system.
Kit Includes:

- 1 lock actuator
- 1 lever clamp
- 1 coupling gasket
- 2 flat small gaskets
- 4 M6 allen head screws
- 4 M6 lock washers
- 12 M10 headless setscrews
- 1 flat large gasket
- 6 M12 headless setscrews
- .5 meters of 3mm cord gasket

BULLETIN: CS5

Catalog Number	Weight (lb.)	Weight (kg)
S1MRHK	.15	.07

VESA ADAPTER PLATE

Syspend 180-MAX and Syspend 281-MAX VESA Adpater Plate used to mount a monitor to the Swivel Tilt Coupling bracket. Compadable with 75/100 hole pattern. VESA 75/100 hole pattern. Helps mount Swivel Tilt Couplings to panels, displays, and IPCs.

BULLETIN: CS4

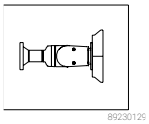

Catalog Number	Weight (lb.)
S2MVAP	.68

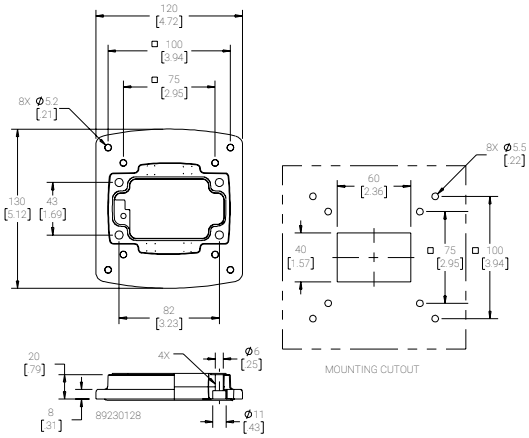

SYSPEND 180-MAX SUSPENSION SYSTEM CONFIGURATIONS

Note to Specifier:
Select suspension system sizing using the Syspend 180-Max load capacity chart.

1. Tube catalog numbers are not included in configuration tables.
2. The catalog numbers for both RAL 9005 black and RAL 7035 light gray are given. Please select one catalog number per line, making sure to keep the color choice consistent throughout the system for a cohesive appearance.
3. There are multiple configurations possible with many of the options shown. Components can be inverted. For illustration purposes, configuration A shows how components can be inverted.

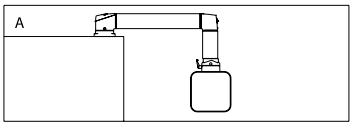

87956903

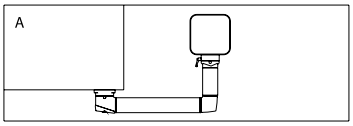

87956961

A

Description	Qty.	Catalog Number
Set-up Joint	1	S1MSJ S1MSJG
Elbow	1	S1ME S1MEG
Flange Coupling	1	S1MFC S1MFCG

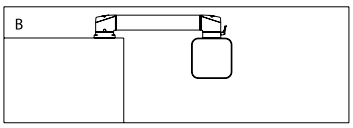

87956965

B

Description	Qty.	Catalog Number
Set-up Joint	1	S1MSJ S1MSJG
Flange Elbow Coupling	1	S1MFEC S1MFECG

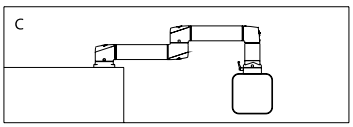

87956966

C

Description	Qty.	Catalog Number
Set-up Joint	1	S1MSJ S1MSJG
Intermediate Joint	1	S1MIJ S1MIJG
Elbow	1	S1ME S1MEG
Flange Coupling	1	S1MFC S1MFCG

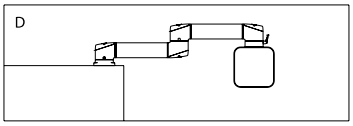

87956967

D

Description	Qty.	Catalog Number
Set-up Joint	1	S1MSJ S1MSJG
Intermediate Joint	1	S1MIJ S1MIJG
Flange Elbow Coupling	1	S1MFEC S1MFECG

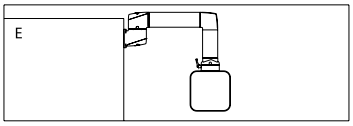

87956969

E

Description	Qty.	Catalog Number
Horizontal Wall Joint	1	S1MWJH S1MWJHG
Elbow	1	S1ME S1MEG
Flange Coupling	1	S1MFC S1MFCG

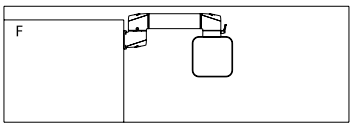

87956970

F

Description	Qty.	Catalog Number
Horizontal Wall Joint	1	S1MWJH S1MWJHG
Flange Elbow Coupling	1	S1MFEC S1MFECG

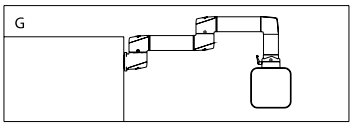

87956971

G

Description	Qty.	Catalog Number
Horizontal Wall Joint	1	S1MWJH S1MWJHG
Intermediate Joint	1	S1MIJ S1MIJG
Elbow	1	S1ME S1MEG
Flange Coupling	1	S1MFC S1MFCG

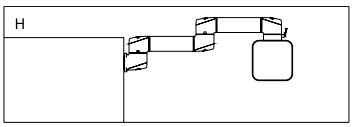

87956973

H

Description	Qty.	Catalog Number
Horizontal Wall Joint	1	S1MWJH S1MWJHG
Intermediate Joint	1	S1MIJ S1MIJG
Flange Elbow Coupling	1	S1MFEC S1MFECG

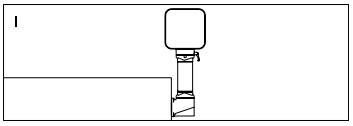

87956974

I

Description	Qty.	Catalog Number
Vertical Wall Joint	1	S1MVWJ S1MVWJG
Flange Coupling	1	S1MFC S1MFCG

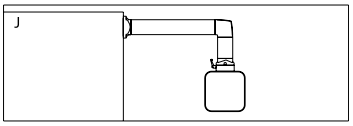

87956975

J

Description	Qty.	Catalog Number
Wall Flange	1	S1MWF S1MWFG
Elbow	1	S1ME S1MEG
Flange Coupling	1	S1MFC S1MFCG

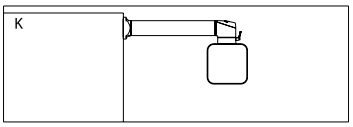

87956976

K

Description	Qty.	Catalog Number
Wall Flange	1	S1MWF S1MWFG
Flange Elbow Coupling	1	S1MFEC S1MFECG

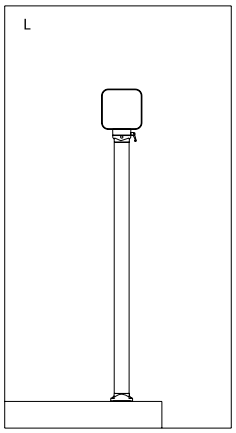

87956977

L

Description	Qty.	Catalog Number
Wall Flange	1	S1MWF S1MWFG
Flange Coupling	1	S1MFC S1MFCG

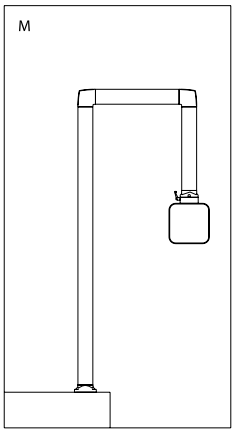

87956979

M

Description	Qty.	Catalog Number
Wall Flange	1	S1MWF S1MWFG
Elbow	2	S1ME S1MEG
Flange Coupling	1	S1MFC S1MFCG

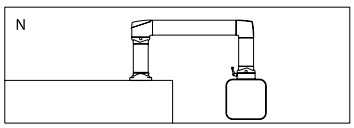

87956980

N

Description	Qty.	Catalog Number
Wall Flange	1	S1MWF S1MWFG
Rotatable Elbow	1	S1MER S1MERG
Elbow	1	S1ME S1MEG
Flange Coupling	1	S1MFC S1MFCG

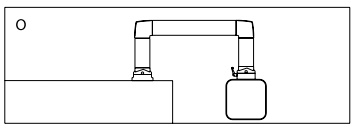

87956981

O

Description	Qty.	Catalog Number
Rotary Base	1	S1MTBB S1MTBBG
Elbow	2	S1ME S1MEG
Flange Coupling	1	S1MFC S1MFCG

Note to Specifier:
The Following Images show how you can combine the Syspend 281-Max and Syspend 180-Max systems using the Reduction Elbow. The Length of the system will need to come from the Syspend 281-Max and the connection to the enclosure will be the Syspend 180-Max. The following charts will include the number of tubes necessary for each system as well as the couplings. Please note that all of the possible length options for tubes are given for your reference and only select the total number of parts listed in the table Qty. column.

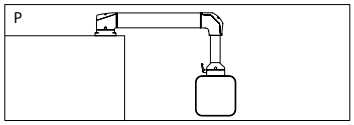

89135699

P

Description	Qty.	Catalog Number
281-Max Set-up Joint	1	S2MSJ
281-Max Tube	1	S2MT250 S2MT500 S2MT750 S2MT1000 S2MT1250 S2MT1500 S2MT1750 S2MT2000
281-Max to 180-Max Reduction Elbow	1	S1MRE
180-Max Tube	1	S1MT250 S1MT500 S1MT750 S1MT1000 S1MT1250 S1MT1500
180-Max Flange Coupling	1	S1MFC

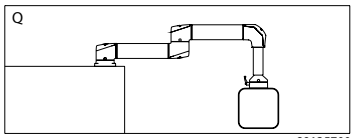

89135700

Q

Description	Qty.	Catalog Number
281-Max Set-up Joint	1	S2MSJ
281-Max Tubes	2	S2MT250 S2MT500 S2MT750 S2MT1000 S2MT1250 S2MT1500 S2MT1750 S2MT2000
281-Max Intermediate Joint	1	S2MIJ
281-Max to 180-Max Reduction Elbow	1	S1MRE
180-Max Tube	1	S1MT250 S1MT500 S1MT750 S1MT1000 S1MT1250 S1MT1500
180-Max Flange Coupling	1	S1MFC

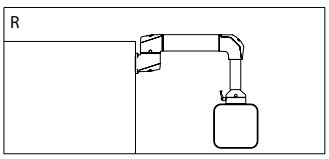

89135701

R

Description	Qty.	Catalog Number
281-Max Horizontal Wall Joint	1	S2MWJH
281-Max Tube	1	S2MT250 S2MT500 S2MT750 S2MT1000 S2MT1250 S2MT1500 S2MT1750 S2MT2000
281-Max to 180-Max Reduction Elbow	1	S1MRE
180-Max Tube	1	S1MT250 S1MT500 S1MT750 S1MT1000 S1MT1250 S1MT1500
180-Max Flange Coupling	1	S1MFC

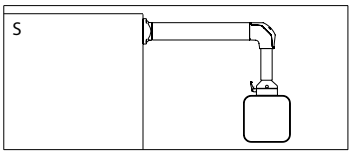

89135702

S

Description	Qty.	Catalog Number
281-Max Wall Flange	1	S2MWF
281-Max Tube	1	S2MT250 S2MT500 S2MT750 S2MT1000 S2MT1250 S2MT1500 S2MT1750 S2MT2000
281-Max to 180-Max Reduction Elbow	1	S1MRE
180-Max Tube	1	S1MT250 S1MT500 S1MT750 S1MT1000 S1MT1250 S1MT1500
180-Max Flange Coupling	1	S1MFC

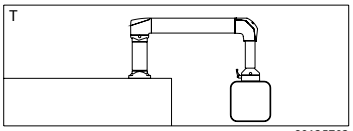

89135703

T

Description	Qty.	Catalog Number
281-Max Wall Flange	1	S2MWF
281-Max Rotatable Elbow	1	S2MER
281-Max Tubes	2	S2MT250 S2MT500 S2MT750 S2MT1000 S2MT1250 S2MT1500 S2MT1750 S2MT2000
281-Max to 180-Max Reduction Elbow	1	S1MRE
180-Max Tube	1	S1MT250 S1MT500 S1MT750 S1MT1000 S1MT1250 S1MT1500
180-Max Flange Coupling	1	S1MFC

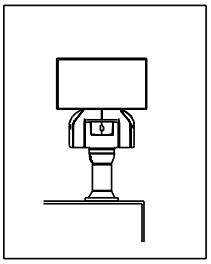

89230121

U

Description	Qty.	Catalog Number
281-Max Wall Flange	1	S2MWF
180-Max Swivel Tilt Coupling Vertical	1	S1MSCV

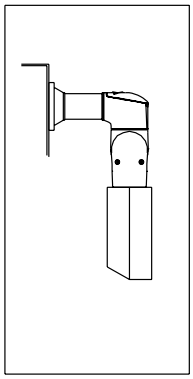

89230123

V

Description	Qty.	Catalog Number
281-Max Wall Flange	1	S2MWF
180-Max Swivel Tilt Coupling Horizontal	1	S1MSCH

Notes