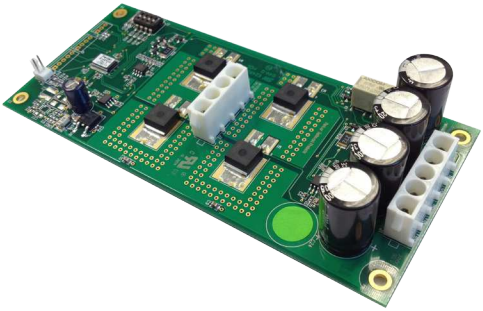

Thermoelectric Temperature Controller

TEC24VCNTLRN, TEC48VCNTLRN Models

INSTRUCTION MANUAL

Rev. E
© 2018 nVent
P/N 89109826

89109826

TABLE OF CONTENTS

Warranty and Return Policy 2
Installation Instructions 2
Power Supply 2
Wiring 2
Table 1 - Inline Fuse Specification 2
Wiring Diagram 3
Setup 4
Table 2 - Cooling and Heating Setpoints 4
Table 3 - Design Data 5
Detail Drawing 6
Operation 7
Table 4 - LED and alarm connection status 7

WARRANTY AND RETURN POLICY

https://hoffman.nvent.com/en/hoffman/warranty-information

INSTALLATION INSTRUCTIONS

The Thermoelectric Temperature Controller is designed to mount directly on all Thermoelectric Cooler (TEC) models, or it can be mounted in any convenient location near the TEC using the included bracket and screws. The location should take into consideration the desired position of the thermistor sensing bead and the 36 in. (915 mm) length of the supplied thermistor harness. It is recommended, but not required, that the thermistor sensing bead be located at the inlet of the inside fan.

First determine the controller mounting location, either directly on the TEC or another suitable location. If mounting on the TEC, use the existing 0.136 in. diameter holes in the heat sink cover. If mounting to something other than the TEC, the bracket can be used as a template for locating the mounting holes. Drill 0.136 in. diameter holes (#29 drill bit) if required, and mount the bracket to the selected location using the supplied (2) #8-18 Type AB tapping screws. Next mount the controller to the bracket using the four supplied #4-40 screws.

POWER SUPPLY

A SELV power source is required.

WIRING

Connect the controller and TEC as shown in the wiring diagrams. Wire harnesses and the fuse are both included with the controller. See Table 1 - Inline Fuse Specification for replacement fuse specifications. Ensure that higher potential input power conductor is connected to the (VIN+) terminal and lower potential is connected to the (VIN–) terminal. Input power conductors shall be no longer than 10 feet. TE module and fan wires between the controller and TEC each shall be twisted pairs, no longer than 3 feet.

Table 1 - Inline Fuse Specification

Controller Kit Model	Fuse Rating	Fuse Part Number
TEC24VCNTLRN	20 A	Littelfuse 314020P or Cooper Bussman ABC-20-R
TEC48VCNTLRN	10 A	Littelfuse 314010P or Cooper Bussman ABC-10-R

NOTE: Fuse supplied with the controller must be installed in the inline fuseholder in the power harness.

© 2018 nVent

WIRING DIAGRAM

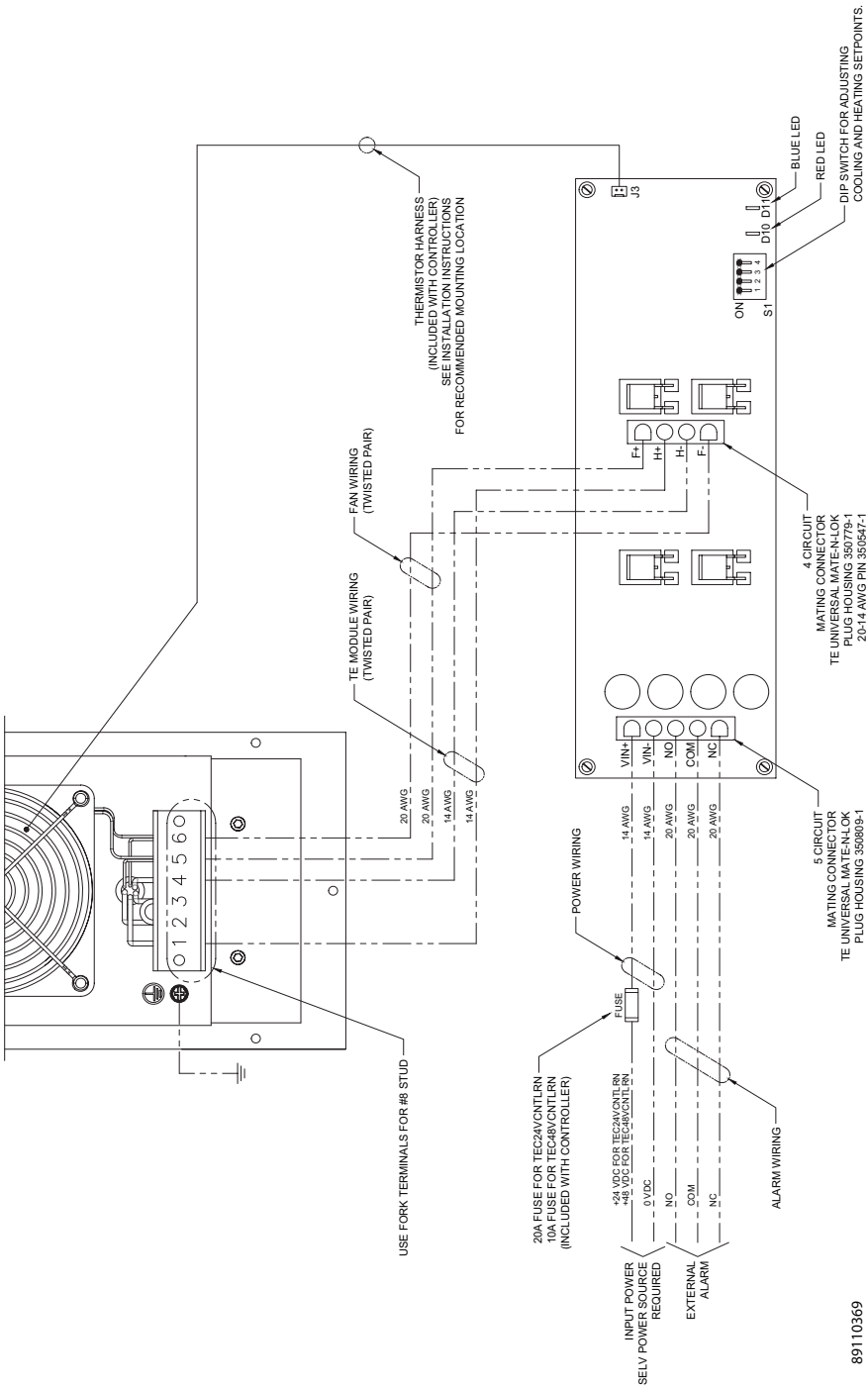

© 2018 nVent

SETUP

Cooling and heating temperature setpoints are factory set to 95 F/35 C for cooling and 59 F/15 C for heating.

These setpoints can be changed by adjusting the 4-position dip switch on the printed circuit board assembly (S1). See Table 2 - Cooling and Heating Setpoints.

Note: The heating function includes a disabled position.

Table 2 - Cooling and Heating Setpoints

Cooling Setpoint (°C)	S1 Position 1	S1 Position 2	S1 Position 3	S1 Position 4	BLUE LED at Startup
35 Factory Default	**ON**	**ON**	See Heating Setpoint below		**Blinks 1 Time**
30	ON	OFF			Blinks 2 Times
25	OFF	ON			Blinks 3 Times
22.5	OFF	OFF			Blinks 4 Times
Heating Setpoint (°C)	**S1 Position 1**	**S1 Position 2**	**S1 Position 3**	**S1 Position 4**	**RED LED at Startup**
15 Factory Default	See Cooling Setpoint above		**ON**	**ON**	**Blinks 1 Time**
5			ON	OFF	Blinks 2 Times
-5			OFF	ON	Blinks 3 Times
No Heat			OFF	OFF	Blinks 4 Times

© 2018 nVent

Table 3 - Design Data

Technical Data	Part Number	
	TEC24VCNTLRN	TEC48VCNTLRN
Rated Voltage (VDC)	24	48
Operating Range (VDC)	18 to 30	40 to 60
Maximum Current @ Rated Voltage (Amps) **	17.2	8.6
Operating Temperature (°F/°C)	-40 to +149/ -40 to +65	
Alarm Contact Rating	1) 0.5 A max @ 24 VDC - from same source of power as unit, SELV, non-power limited (greater than 15 W); OR 2) 0.5 A max @ 24 VAC - from SELV, Class 2 safety isolating transformer.	1) 0.5 A max @ 48 VDC - from same source of power as unit, SELV, non-power limited (greater than 15 W); OR 2) 0.5 A max @ 24 VAC - from SELV, Class 2 safety isolating transformer.
Temperature Accuracy (°F/°C)	±3.6/2	
High Temperature Alarm (°F/°C)	27/15 above cooling setpoint	
Low Temperature Alarm (°F/°C)	* 18/10 below heating setpoint, N/A if heating is disabled.	

* If heating is disabled, there is no low temp alarm.

** Actual current draw will depend on the TEC model connected.

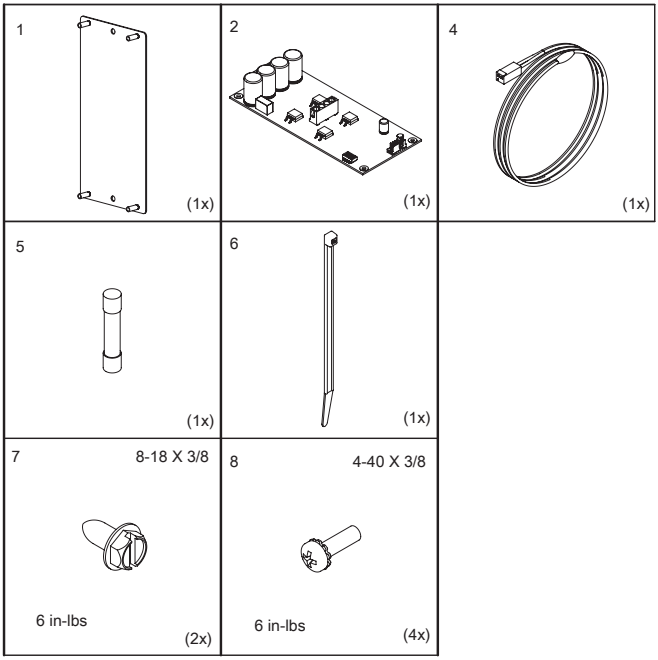

© 2018 nVent

DETAIL DRAWING

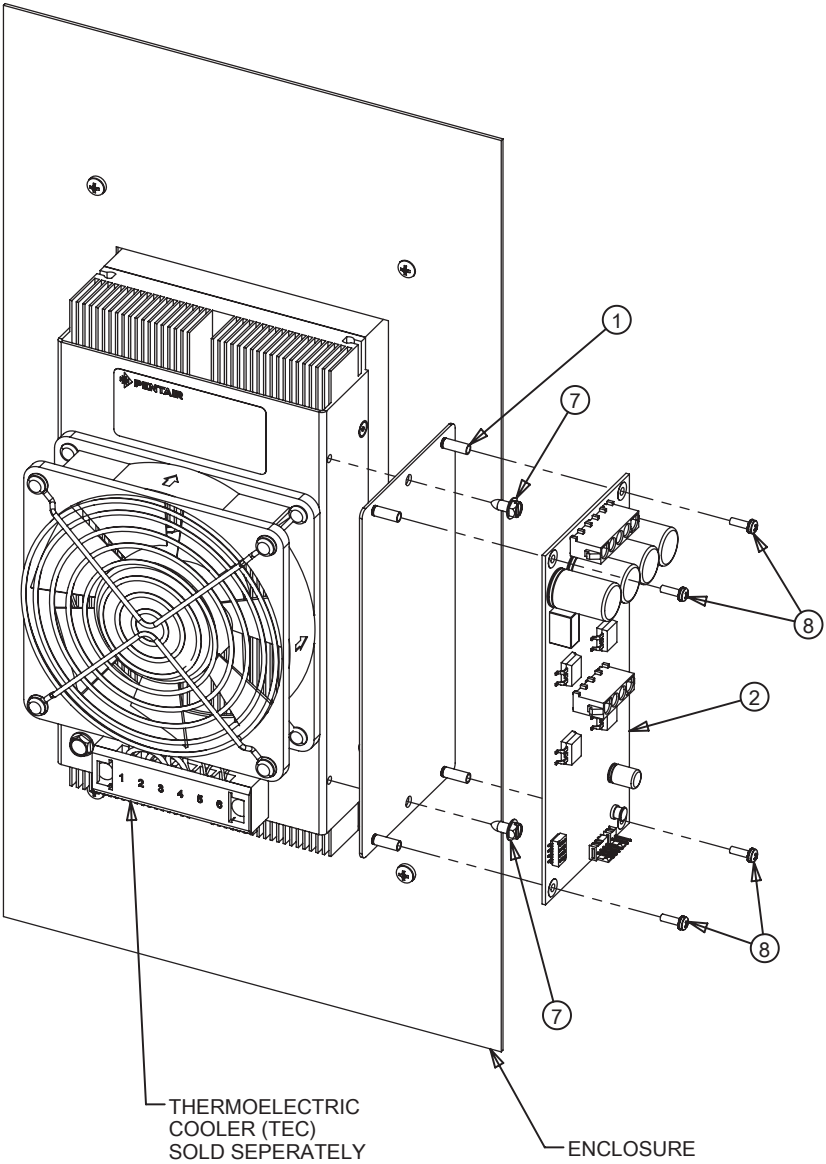

© 2018 nVent

OPERATION

Each time power is applied, the controller will step though a start-up sequence. This consists of indicating the current cooling and heating settings, and turning on the cooling and heating function such that proper operation of the TEC can be verified. The sequence is as follows:

1. The blue cooling LED blinks for a half second ON and half second OFF for the appropriate number of times (see Table 2 - Cooling and Heating Setpoints).
2. The red heating LED blinks for half second ON and half second OFF for the appropriate number of times (see Table 2 - Cooling and Heating Setpoints).
3. The TEC ramps up in cooling mode for 5 seconds. The blue cooling LED flashes rapidly.
4. The TEC ramps up in heating mode for 5 seconds. The red heating LED flashes rapidly.

The controller will command the TEC to cool if the temperature read by the thermistor is above the cooling setpoint, and to heat if the temperature is below the heating setpoint. If heating is called for, the controller will automatically reverse the DC voltage to the TE modules. During cooling, H+ is a higher potential than H-. During heating, H- is a higher potential than H+. The controller logic will slowly ramp power to the peltier chips. If the temperature read by the thermistor is between the cooling and heating setpoints, the controller will be in a standby mode with no power applied to the TEC modules.

The normally open (NO) alarm dry contact will close when an alarm occurs, including loss of power. The normally closed (NC) contact will open when an alarm occurs.

Table 4 - LED and alarm connection status

Status	Red	Blue	Com-NO	Com-NC
OFF	OFF	OFF	Closed	Open
Start up sequence - see Table 2 - Cooling and Heating Setpoints	Flashes	Flashes	Toggles	Toggles
ON – Standby	OFF	OFF	Open	Closed
ON – Cooling	OFF	ON	Open	Closed
ON – Cooling/High Temp Alarm	Flashing	ON	Closed	Open
ON – Heating	ON	OFF	Open	Closed
ON – Heating/Low Temp Alarm	ON	Flashing	Closed	Open
ON – Temp Sensor Failure	Flashing	Flashing	Closed	Open

© 2018 nVent

nVent
2100 Hoffman Way
Anoka, MN 55303 USA
☎ +1.763.422.2211
+1.763.576.3200

nVent.com

 © 2018 nVent P/N 89109826 89109826