WeatherFlo HD

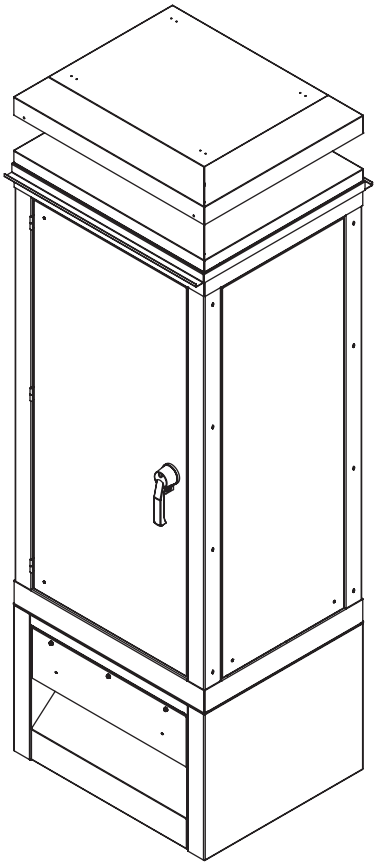

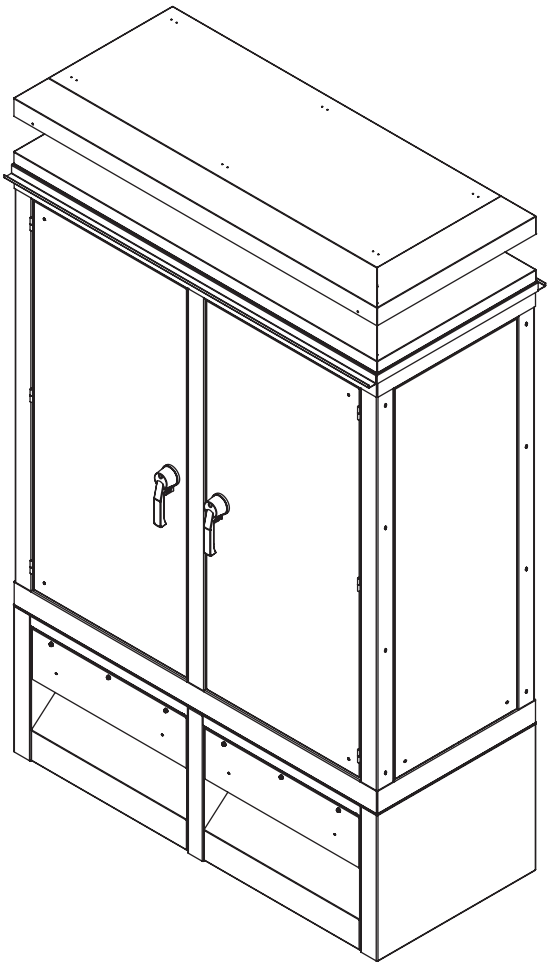

© 2018 Hoffman Enclosures Inc.

1

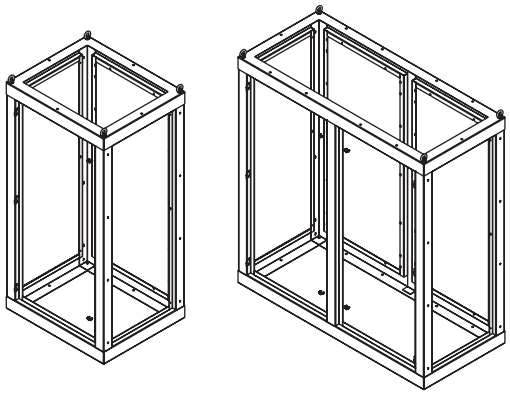

(1x)

2

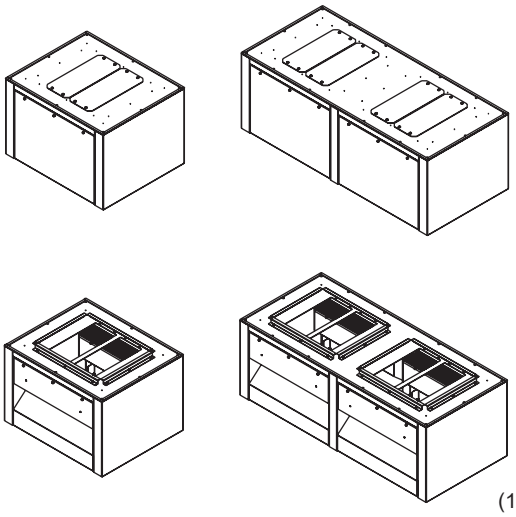

(1x)

3

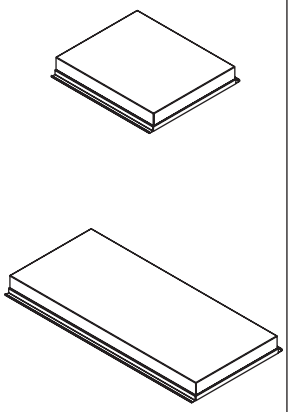

4

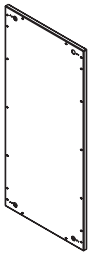

(1x)

5

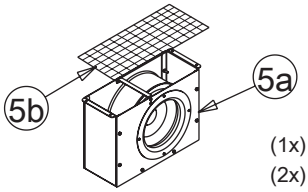

(1x) - 840 CFM
(2x) - 1680 CFM
(3x) - 2520 CFM
(4x) - 3360 CFM

6

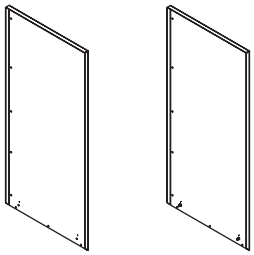

(1x)

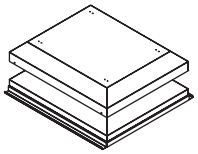

7

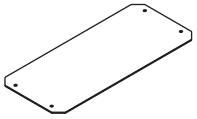

(4x)

8 3/8-16 X 1.00

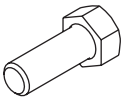

(8x)
(16x)

9 3/8

(6x)
(12x)
(28x)

10 3/8-16

(8x)
(14x)
(16x)

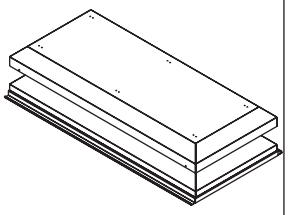

(1x)

11 3/8

(2x)
(4x)

12 1/4-20 X 1.00

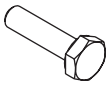

(4x)
(18x)

13 1/4

(4x)
(18x)

14 1/4-20 X .75 SS

(16x)

15 1/4

(16x)

16 3/8-16 X 1.50

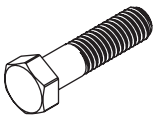

(14x)

17

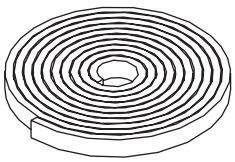

27 FT/8.23 M

18

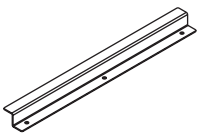

(4x)
(8x)

19 1/4-20

(12x)
(24x)

20

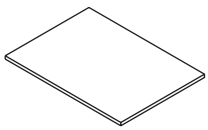

(0x)

© 2018 Hoffman Enclosures Inc.

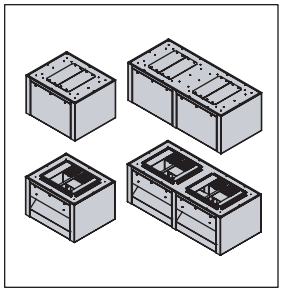

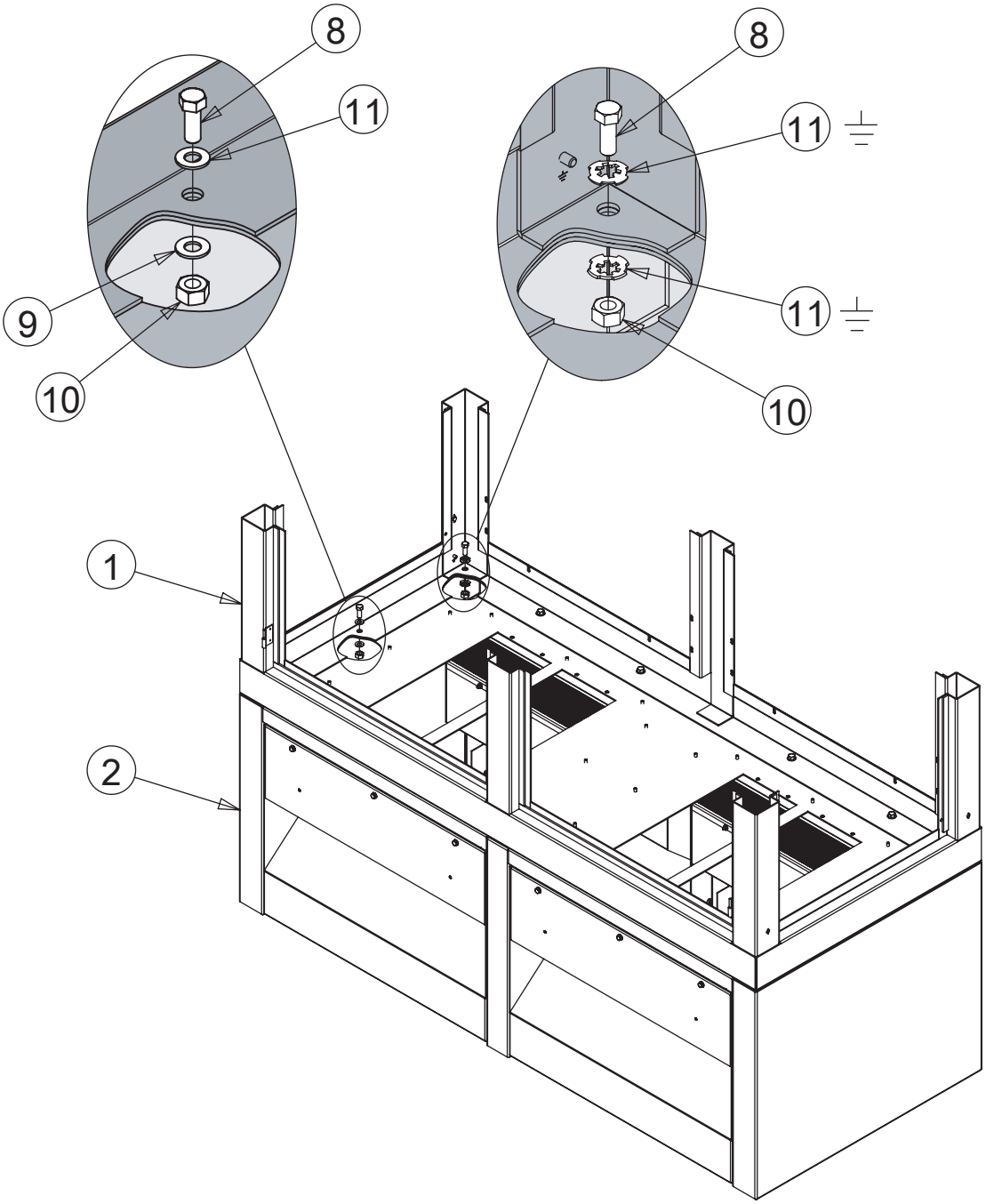

© 2018 Hoffman Enclosures Inc.

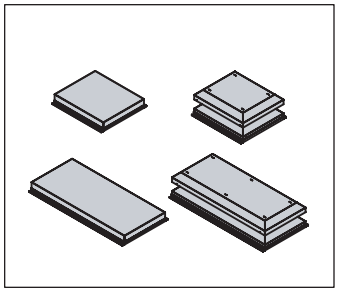

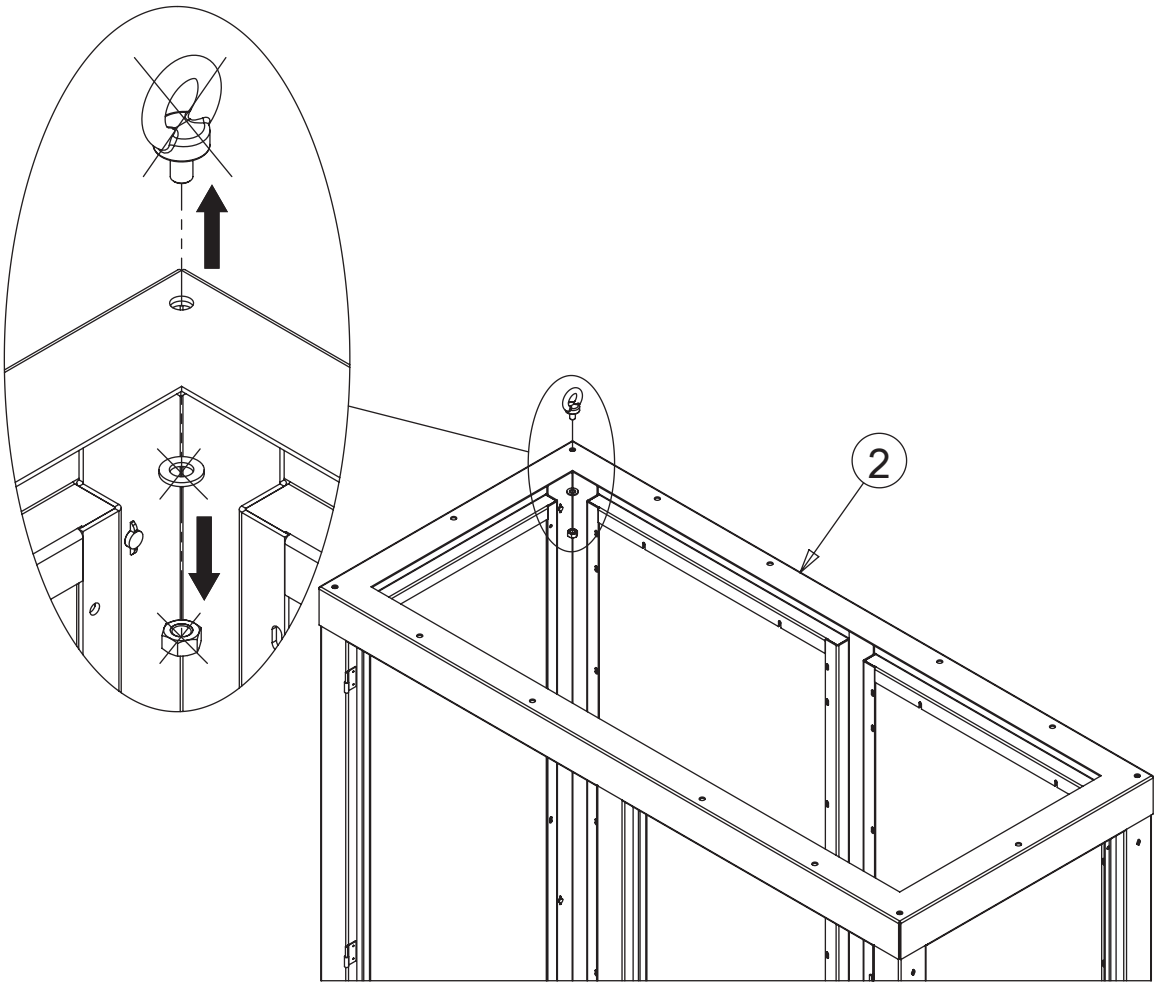

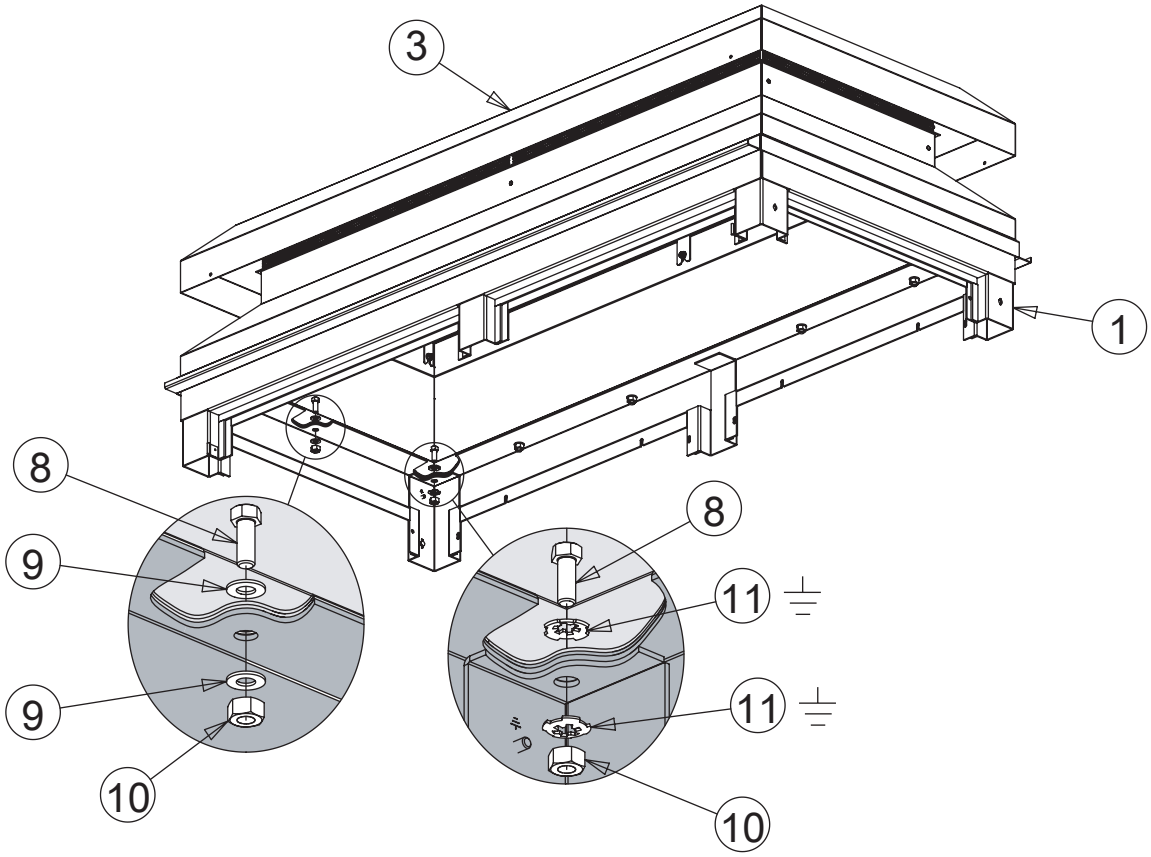

© 2018 Hoffman Enclosures Inc.

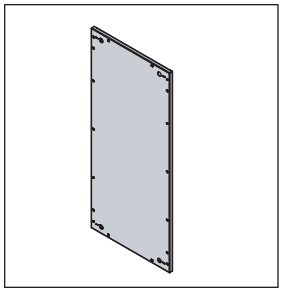

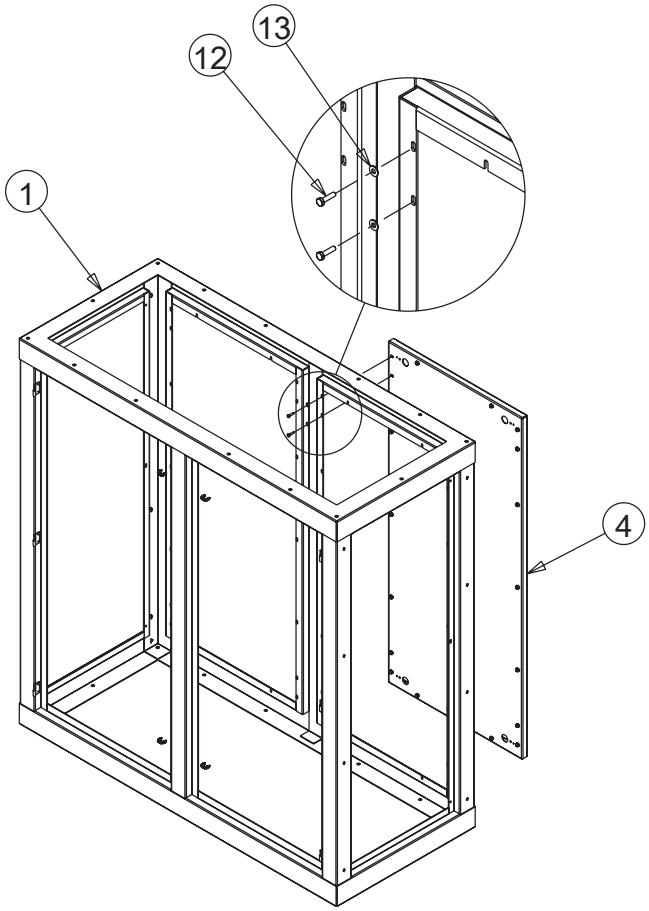

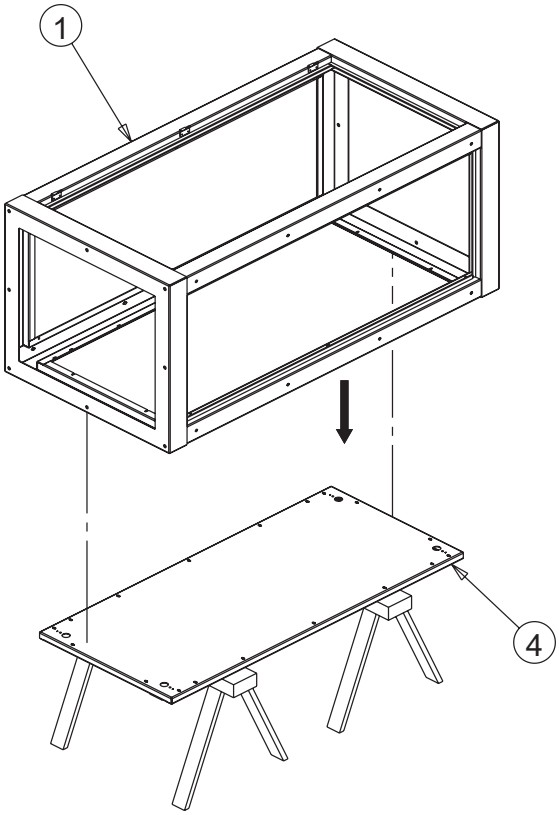

© 2018 Hoffman Enclosures Inc.

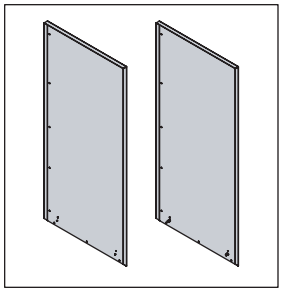

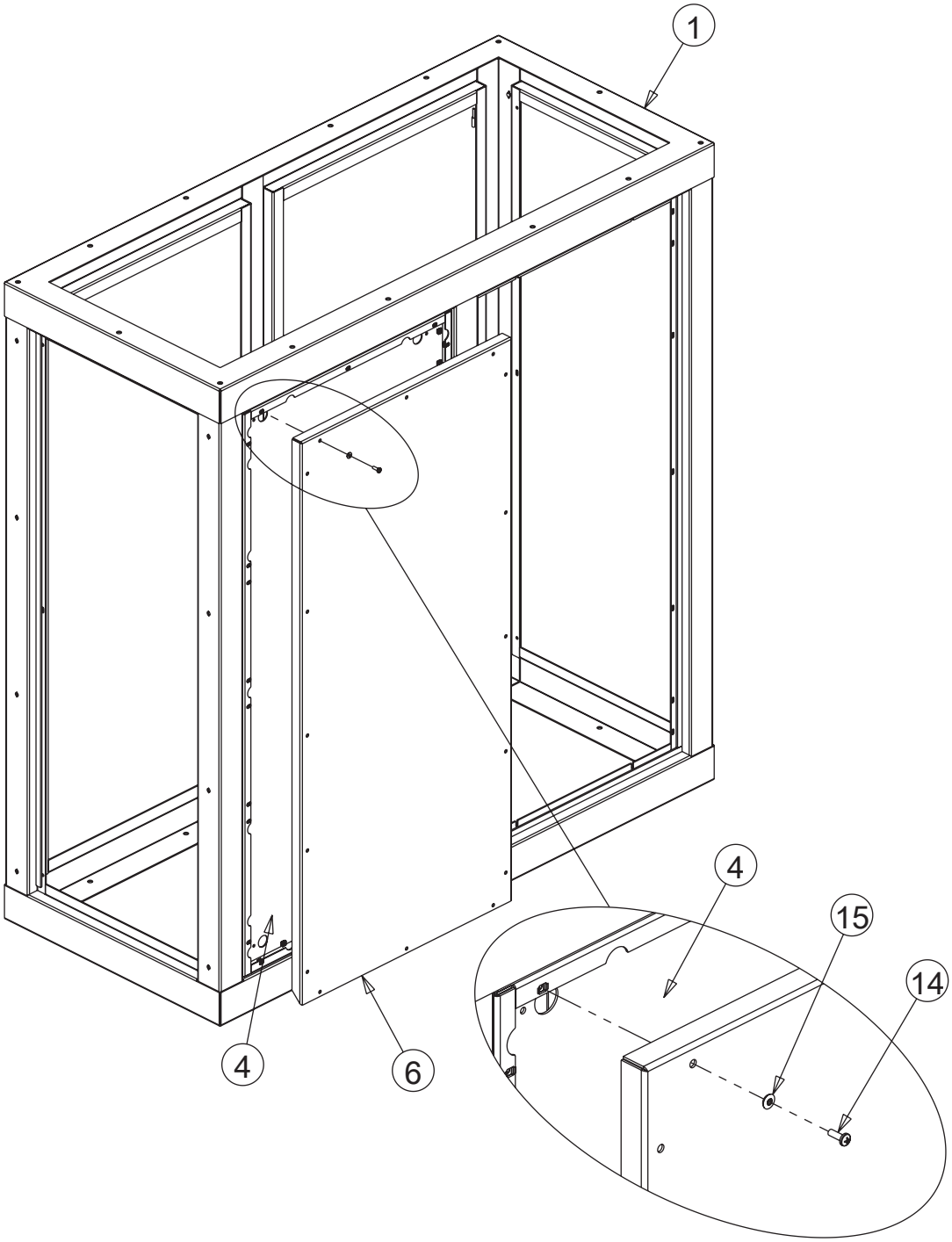

© 2018 Hoffman Enclosures Inc.

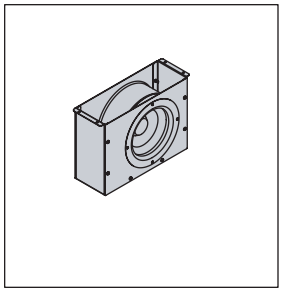

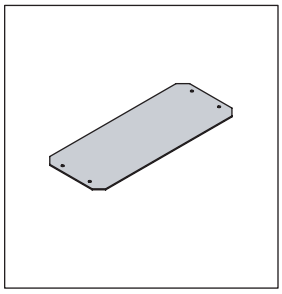

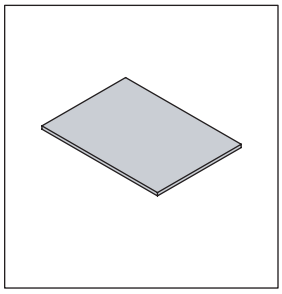

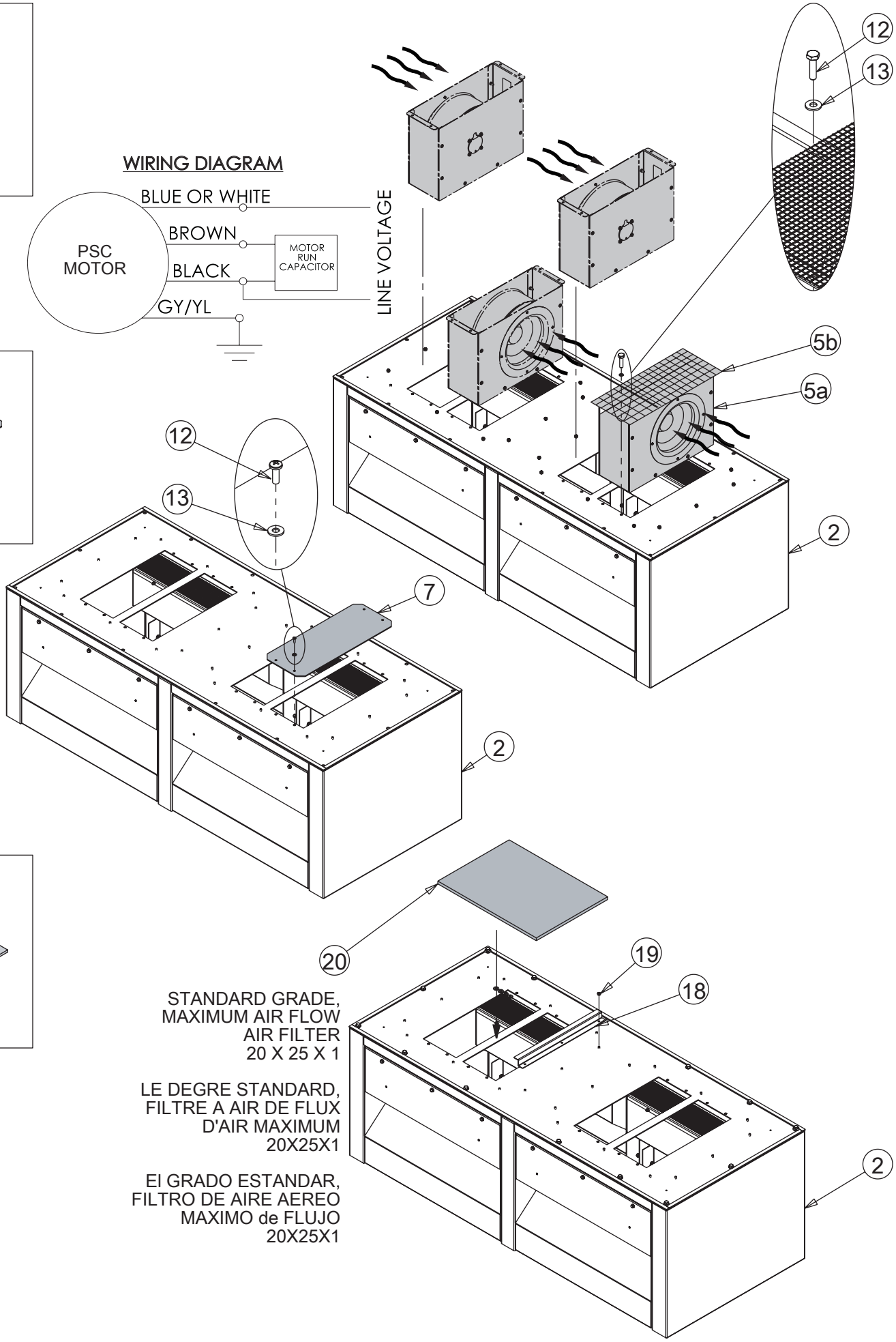

© 2018 Hoffman Enclosures Inc.

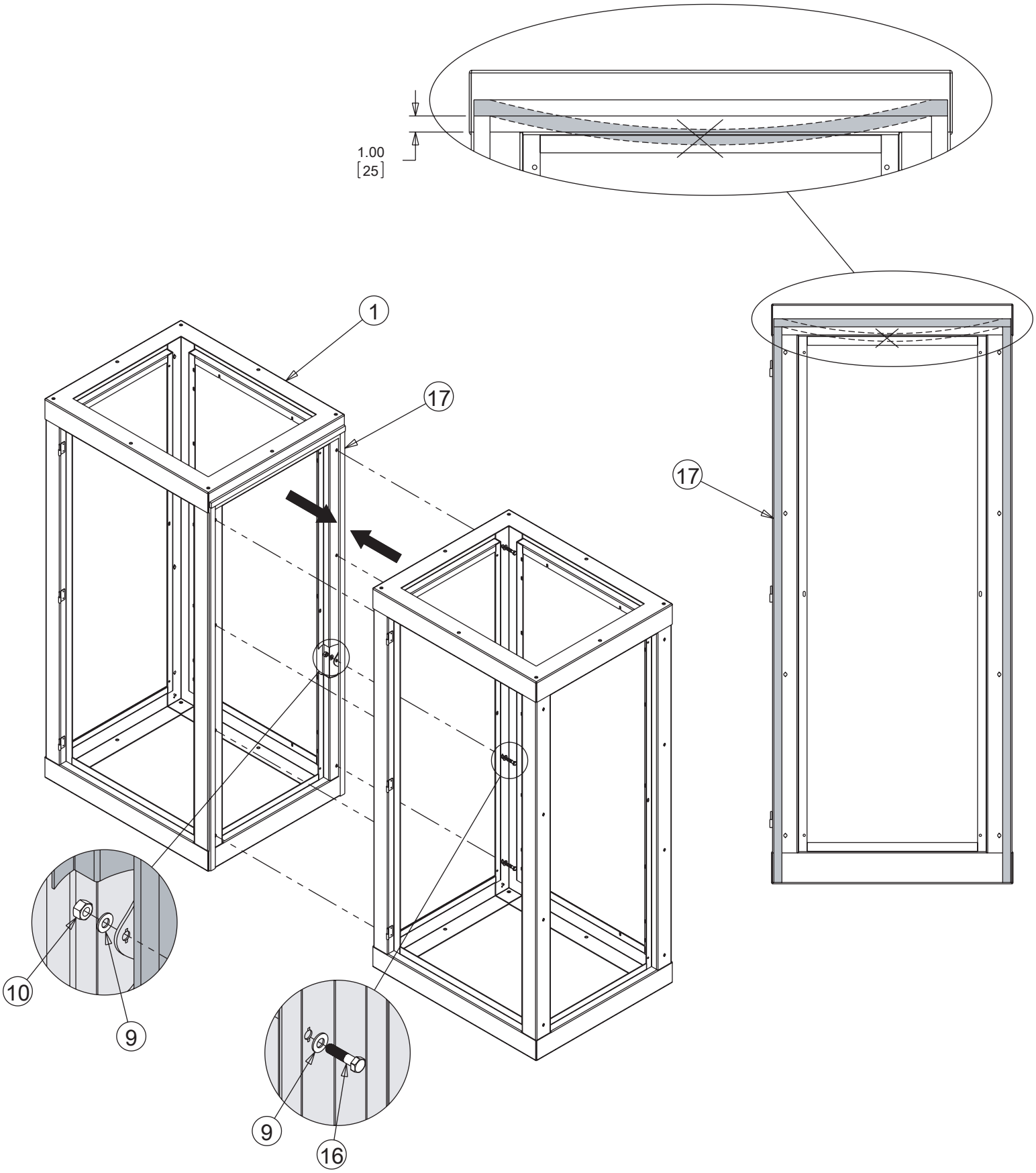

© 2018 Hoffman Enclosures Inc.