FREE-STAND DISCONNECT WITH QUICK-RELEASE CONTINUOUS HINGE, TYPE 4

INDUSTRY STANDARDS

UL 508A Listed; Type 4, 12, 3R; File No. E61997
cUL Listed per CSA C22.2 No. 94; Type 4, 12, 3R; File No. E61997

NEMA/EEMAC Type 4, 12, 3R
IEC 60529, IP66

APPLICATION

Simple, heavy-duty with easy door removal and re-installation, this disconnect enclosure can be ordered with one to three doors to fit a range of applications.

SPECIFICATIONS

- Quick-release continuous hinge
- 11 gauge steel (.121 inch)
- Seams continuously welded and ground smooth
- Body stiffeners in larger enclosures for extra rigidity
- Body flange trough excludes liquids and contaminants
- Heavy-duty lifting eyes anchor into reinforced top
- Removable centerposts permit easy panel installation
- Heavy-duty 3-point latching mechanism operated by padlocking handle on all doors
- Panel supports
- Data pocket is high-impact thermoplastic
- Oil-resistant gasket
- Master door is far right-hand door on all enclosures
- Defeater on primary door requires a screwdriver to open
- Mechanical interlock activated by master door prevents slave doors from being opened first; doors can be closed in any order
- Universal cutout on right flange provides mounting for most disconnect operators by using operator adapters
- Includes door hardware
- Models do not include panels; painted or conductive panels sold separately

FINISH

ANSI 61 gray, polyester powder paint outside and inside.

ACCESSORIES

Panels for Large Bulletin A27, A28, A28S4 and A34 Multi-Door Enclosures
Operator Adapters for Universal Cutouts
PANELITE Enclosure Lights
Floor Stand Kit
SPECTRACOOL Indoor/Outdoor
HF Side-Mount Filter Fans
Steel, Stainless Steel and Non-Metallic Window Kits
Electric Heaters
HOL-SEALERS Hole Seals
INTERSAFE Data Interface Ports, Type 4/4X/12

MODIFICATION AND CUSTOMIZATION

Hoffman excels at modifying and customizing products to your specifications. Contact your local Hoffman sales office or distributor for complete information.

BULLETIN: A4L3D

Standard Product **One-Door Enclosures**

Catalog Number	AxBxC in./mm	Interior Finish	Painted Panel	Conductive Panel	Panel Size in./mm
A72XM3418FTCLP4	72.12 x 33.50 x 18.12 1832 x 851 x 460	Gray	A72PM34	A72PM34G	60.00 x 27.75 1524 x 705
A72XM4018FTCLP4	72.12 x 40.25 x 18.12 1832 x 1022 x 460	Gray	A72PM40	A72PM40G	60.00 x 33.75 1524 x 857
A84XM4018FTCLP4	84.12 x 40.25 x 18.12 2137 x 1022 x 460	Gray	A84PM40	A84PM40G	72.00 x 33.75 1829 x 857
A90XM4018FTCLP4	90.12 x 40.25 x 18.12 2289 x 1022 x 460	Gray	A90PM40	A90PM40G	78.00 x 33.75 1981 x 857

Order painted or conductive panel separately.

Standard Product **Two-Door Enclosures**

Catalog Number	AxBxC in./mm	Interior Finish	Stiffener Locations in./mm	Painted Panel	Conductive Panel	Panel Size in./mm
A72XM5418FTCLP4	72.12 x 54.50 x 18.12 1832 x 1384 x 460	Gray	None None	A72PM54	A72PM54G	60.00 x 48.00 1524 x 1219
A72XM6618FTCLP4	72.12 x 66.50 x 18.12 1832 x 1689 x 460	Gray	21.00 533	A72PM66	A72PM66G	60.00 x 60.00 1524 x 1524
A72XM7818FTCLP4	72.12 x 78.50 x 18.12 1832 x 1994 x 460	Gray	24.00 610	A72PM78	A72PM78G	60.00 x 72.00 1524 x 1829
A84XM7818FTCLP4	84.12 x 78.50 x 18.12 2137 x 1994 x 460	Gray	24.00 610	A84PM78	A84PM78G	72.00 x72.00 1829 x 857
A90XM7818FTCLP4	90.12 x 78.50 x 18.12 2289 x 1994 x 460	Gray	24.00 610	A90PM78	A90PM78G	78.00 x 72.00 1981 x 1829

Order painted or conductive panel separately.

Standard Product **Three-Door Enclosures**

Catalog Number	AxBxC in./mm	Interior Finish	Large Painted Panel	Large Conductive Panel	No. of Large Panels	Large Panel Size in./mm	Small Painted Panel	Small Conductive Panel	No. of Small Panels	Small Panel Size in./mm
A84XM3EW18FTCLP4	84.12 x 118.75 x 18.12 2137 x 3016 x 460	Gray	A84PM78	A84PM78G	1	72.00 x 72.00 1829 x 1829	A84PM40	A84PM40G	1	72.0 x 33.75 1829 x 857

Order painted or conductive panel separately.

ONE-DOOR ENCLOSURE

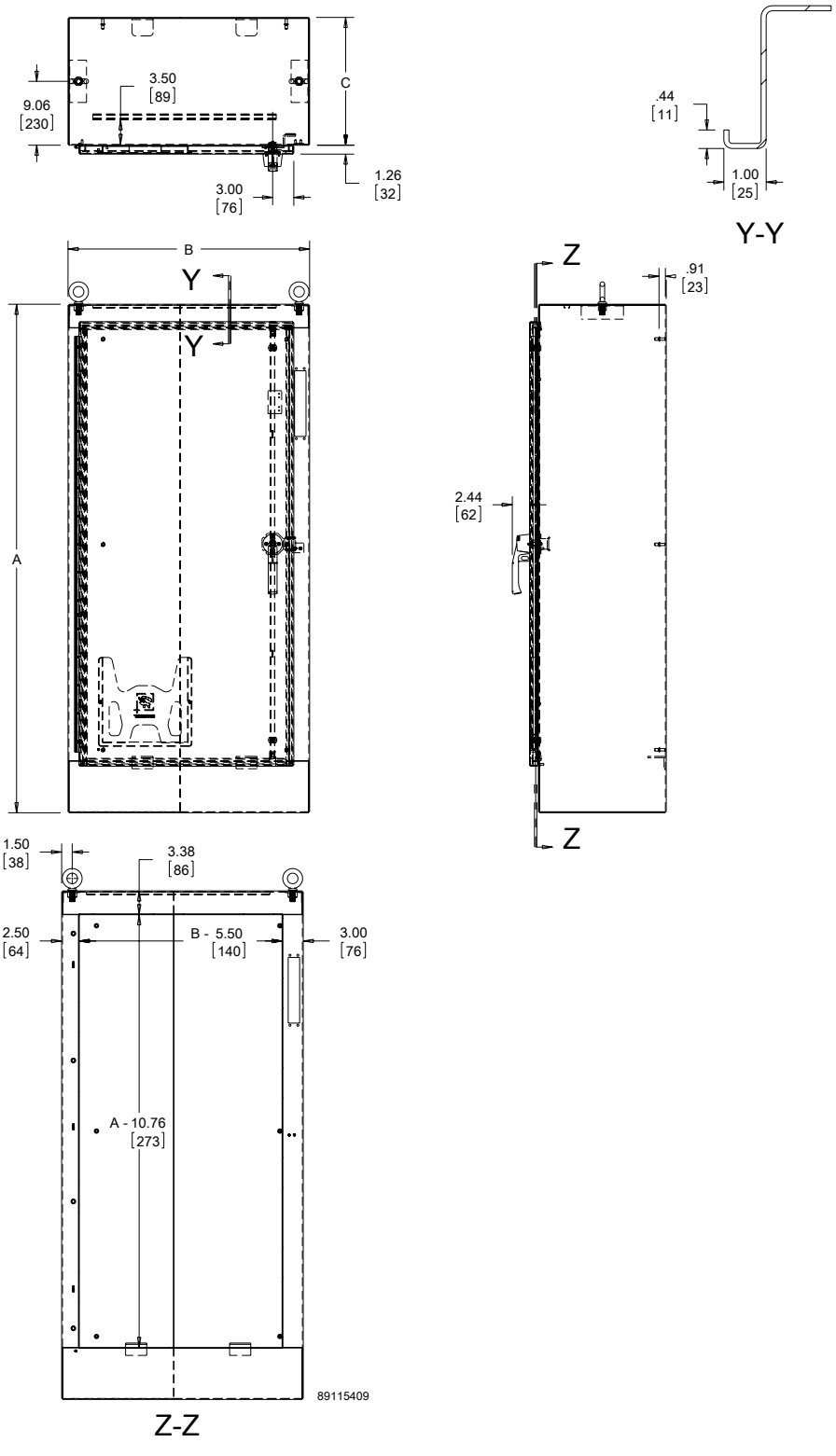

TWO-DOOR ENCLOSURE

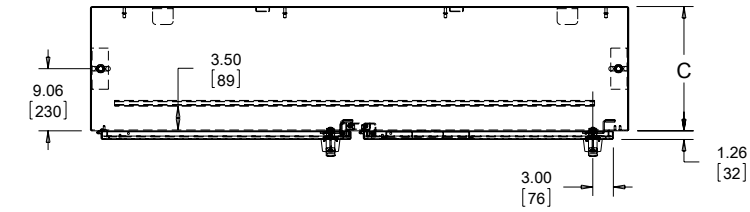

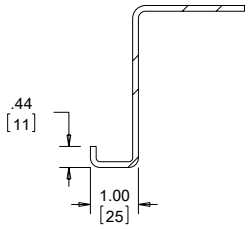

Y-Y

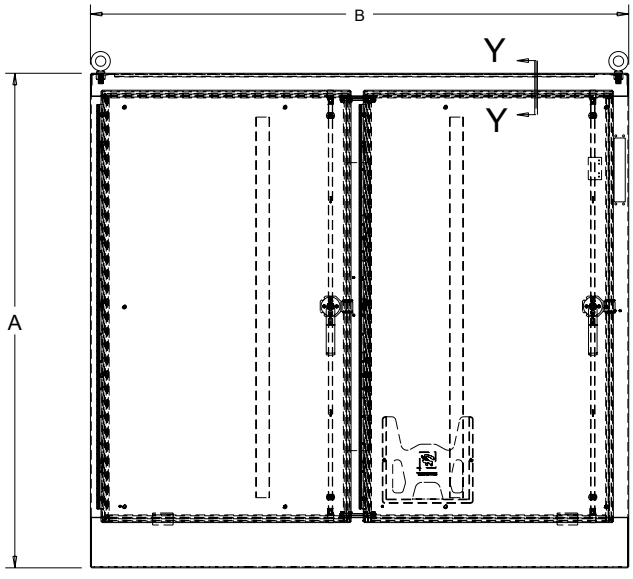

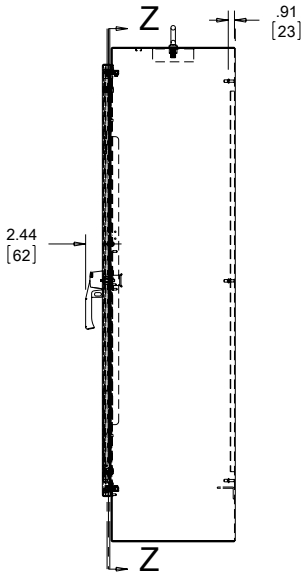

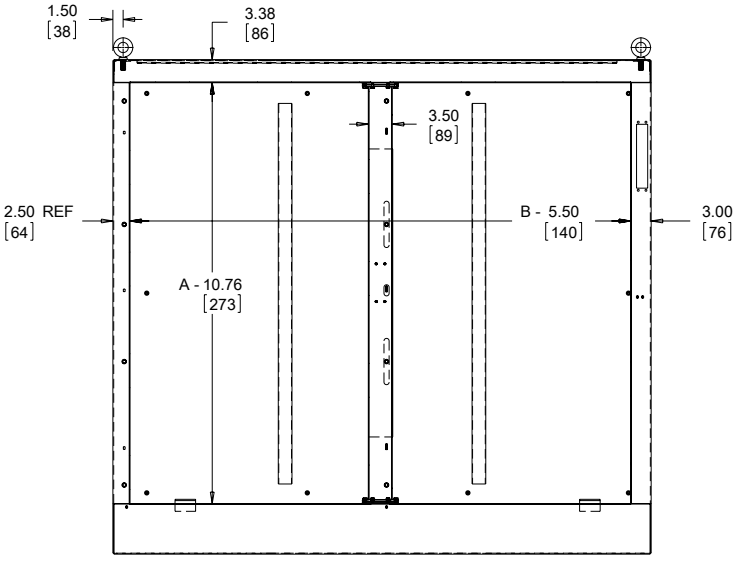

Z-Z

89115411

THREE-DOOR ENCLOSURE

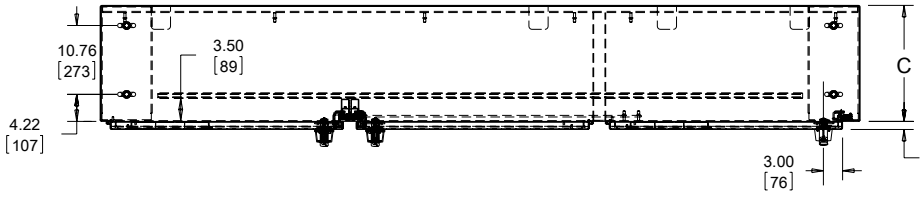

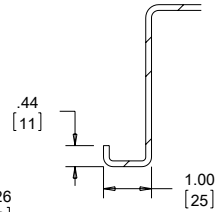

Y-Y

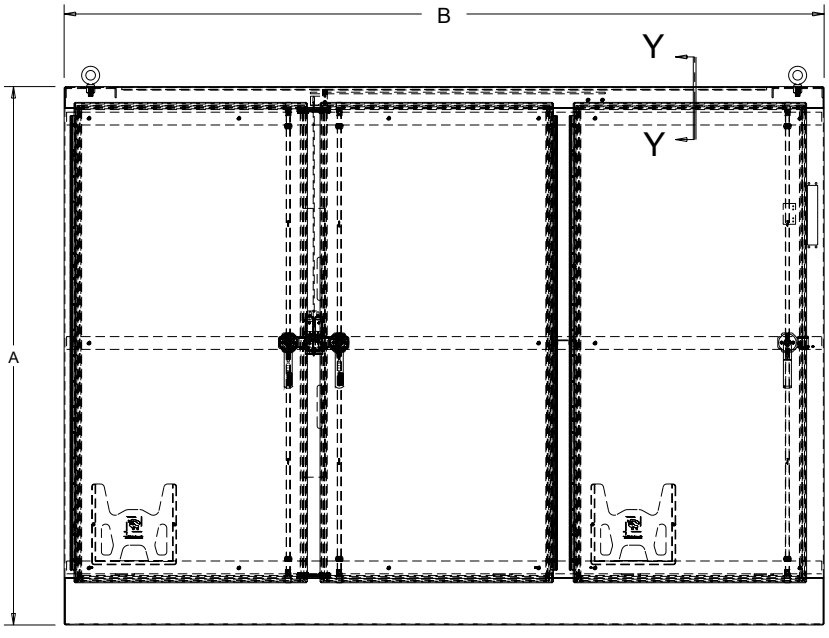

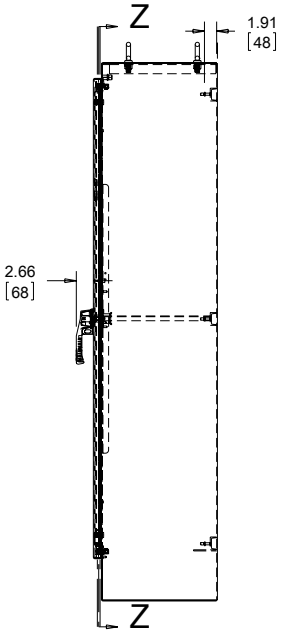

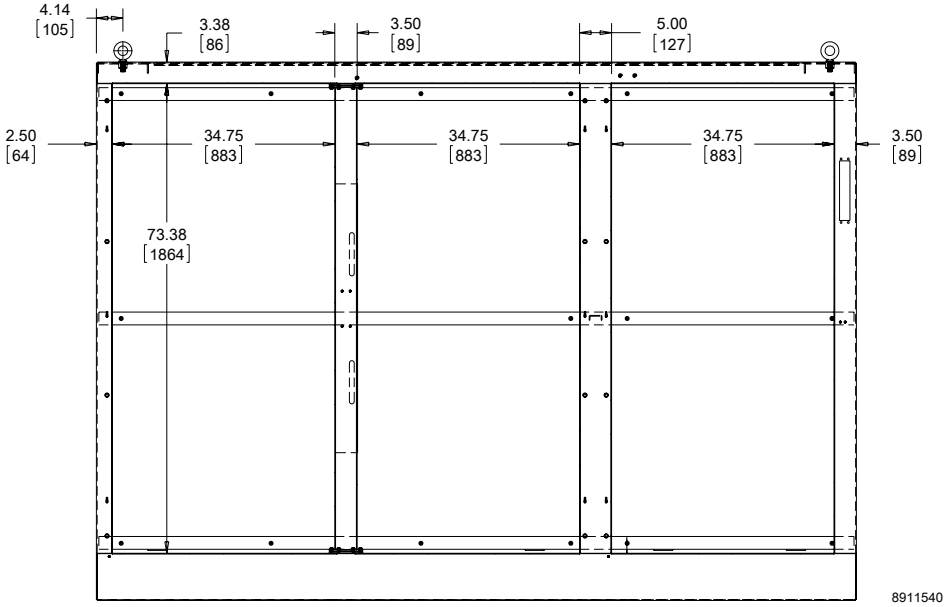

Z-Z

DISCONNECT MOUNTING SPACE

Disconnects are located by dimension E1. Wiring space W1 is available when disconnect is installed in the enclosure. See Technical Information chapter for E1 Spacing by Enclosure Height for various disconnect switch manufacturers.

W1 = Wiring Space
See Technical Information chapter for wire bend space.

Refer to ***NATIONAL ELECTRICAL CODE, 2005*** article 430-10(b) for wiring space required for line side conductors to be connected to disconnect. **Verify your application to determine whether wiring space is adequate.**

Consult Space Occupied by Disconnect drawing to determine whether the disconnect device you are using will fit the enclosure size you have selected.

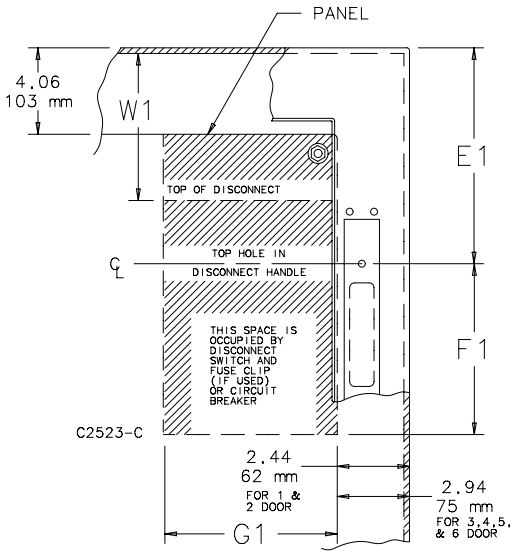

Consult disconnect manufacturer for F1 and G1 dimensions.

UNIVERSAL CUTOUT OVERVIEW

APPLICATION

The universal cutout is used in large freestand and floorstand enclosures, i.e., Bulletins A21(S), A28(S), A34 and A4L3D. Operator Adapter Kits are required in order to install the various manufacturers' hardware. Note that 400A (or greater) disconnect switches and 600A (or greater) circuit breakers require the "Large" or "High Amp" cutout and large handle. A 200A (or less) disconnect switch and 400A (or less) circuit breaker require a small handle, which is provided in the ABL kit for Allen-Bradley variable-depth disconnect switches or the SITEL kit for Siemens (and select other manufacturers) flex-cable devices. The "Large" or "High Amp" cutout accepts the larger operating handle whose mounting hole centers are 6.500-in. apart.
Universal cutouts are designed to house the following:

Allen-Bradley

- Bulletin 1494F flange-mount disconnect switches and Bulletin 1494D flange-mount operators for circuit breakers
- Bulletin 1494V disconnect switches with flange-mount variable-depth operating mechanisms and Bulletin 1494V flange-mount variable-depth operating mechanisms for circuit breakers
- Bulletin 140U flexible cable operating mechanisms for 140U molded case circuit breakers
- Bulletin 140G flexible cable and variable depth flange-mount molded case circuit breakers
- Bulletin 1494C cable-operated disconnect switches with flange-mount handles
- Bulletin 194RC cable-operated flange-mount handles for use with the NFPA 79 compliant 194R IEC rotary disconnect switches

ABB Controls flange-mount variable-depth operating mechanisms for disconnect switches and circuit breakers. Also the cable version for circuit breakers.

Eaton Cutler-Hammer Type C361 disconnect switches and operator mechanisms, and Type C371 circuit breakers and circuit breaker operating mechanisms. Also Type SM safety handle mechanisms and FLEX SHAFT handle operators for circuit breakers.

General Electric Type STDA flange handles and variable-depth operating mechanisms for disconnect switches and circuit breakers. Also SPECTRAFLEX cable operators for circuit breakers.

Siemens ITE MAX FLEX® flange-mount variable-depth operating handles for disconnect switches and circuit breakers.

Schneider Square D® disconnect switches and circuit breakers used with Class 9422 flange-mount variable-depth operating mechanisms or cable mechanisms.
These enclosures will NOT receive Class 9422 bracket-mount disconnect devices, Class 9422TG1 or TG2 devices.

Disconnect Enclosures with Universal Cutout
Universal cutout requires an operator adapter for the brand and type of disconnect being used. See Disconnect Enclosure Accessories to select the operator adapter.

ORDERING

The disconnect switch, operating handle and operating mechanism must be ordered separately. See Technical Information in the nVent HOFFMAN Specifier's Guide for wire bend space available when various manufacturers' disconnect switches are installed. Check the enclosure dimension drawings to verify the chosen disconnect switch will fit in the enclosure.

All 24.12-in. (613-mm) and deeper enclosures require long connecting rods to be ordered in place of short connecting rods.

Notes