PROLINE®

Solid Cover

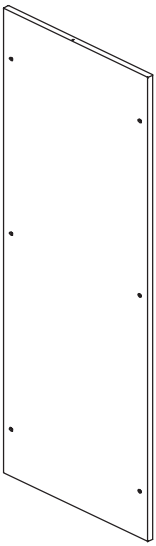

© 2018 Hoffman Enclosures Inc.
PH 763 422 2211 • nVent.com/HOFFMAN
P/N 60127046 87568695

1	2 M6–1x12	3	4 M6–1	5 M6–1x12
(2x)	(4x) (6x)	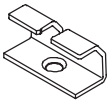 (4x) (6x)	(4x) (6x)	(4x) (6x)

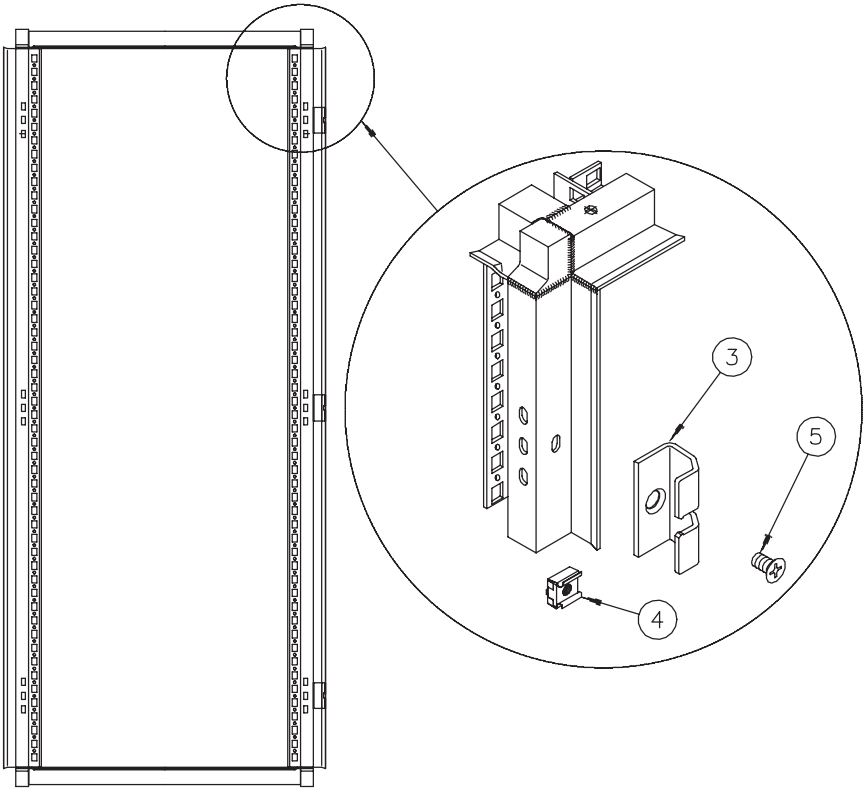

© 2018 Hoffman Enclosures Inc.

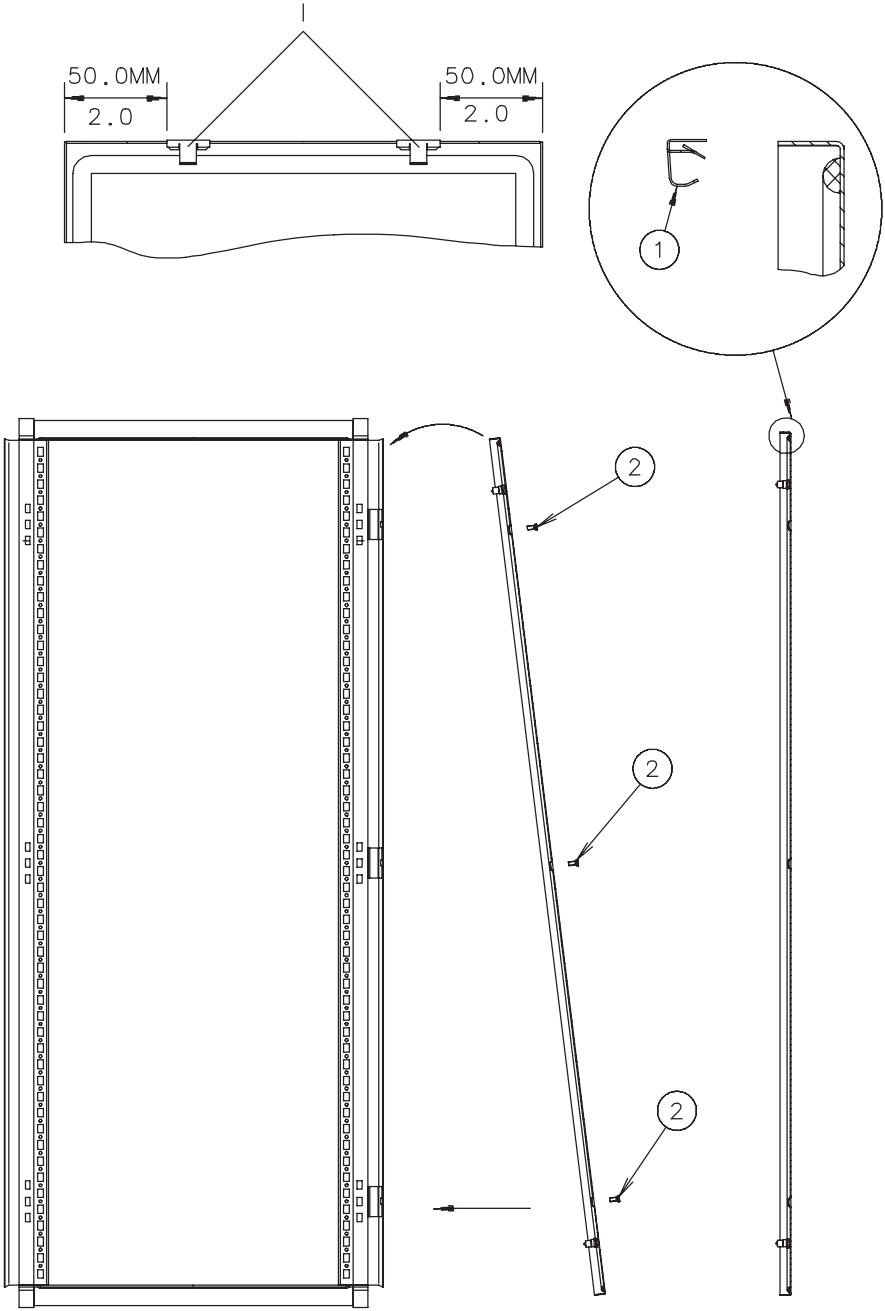

© 2018 Hoffman Enclosures Inc.

© 2018 Hoffman Enclosures Inc.
PH 763 422 2211 • nVent.com/HOFFMAN
P/N 60127046

87568695