PROLINE®

Filler Panel
Füller–Verkleidung
Panneau De Remplisseur
Panel Del Llenador

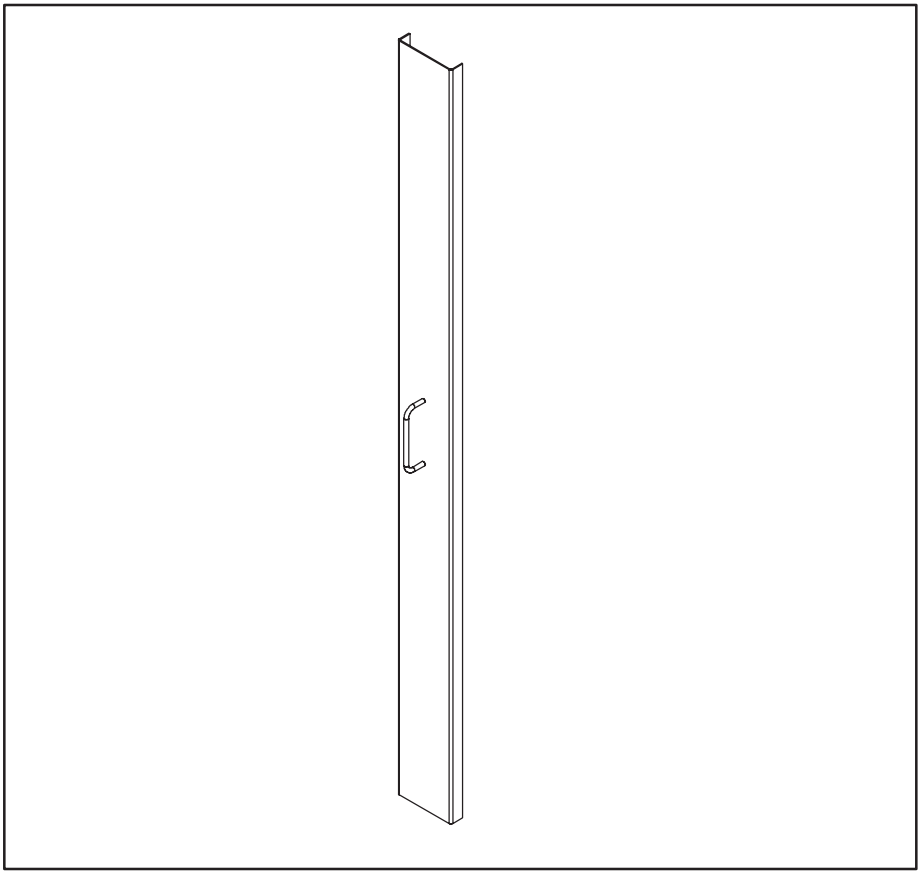

© 2018 Hoffman Enclosures Inc.
PH 763 422 2211 • nVent.com/HOFFMAN
P/N 87400744 87569277

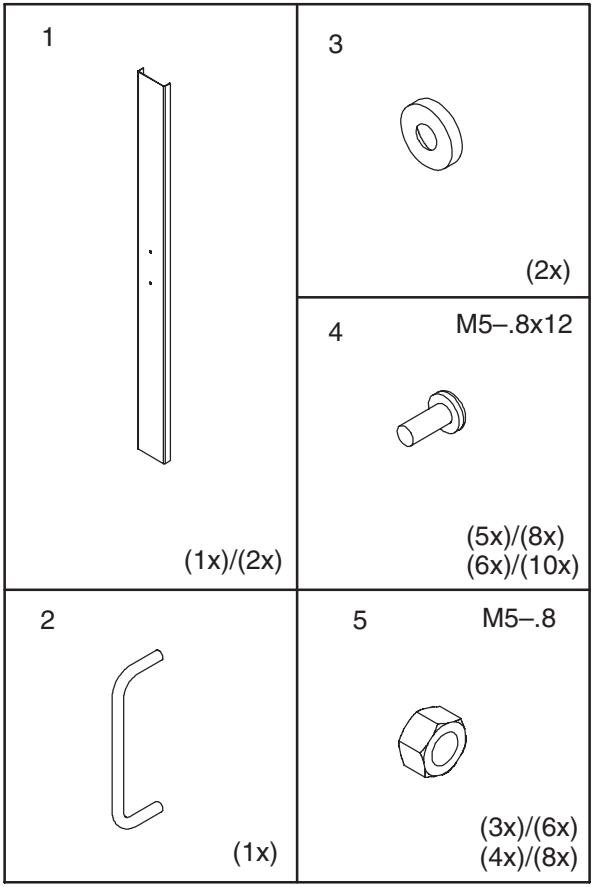

© 2018 Hoffman Enclosures Inc.

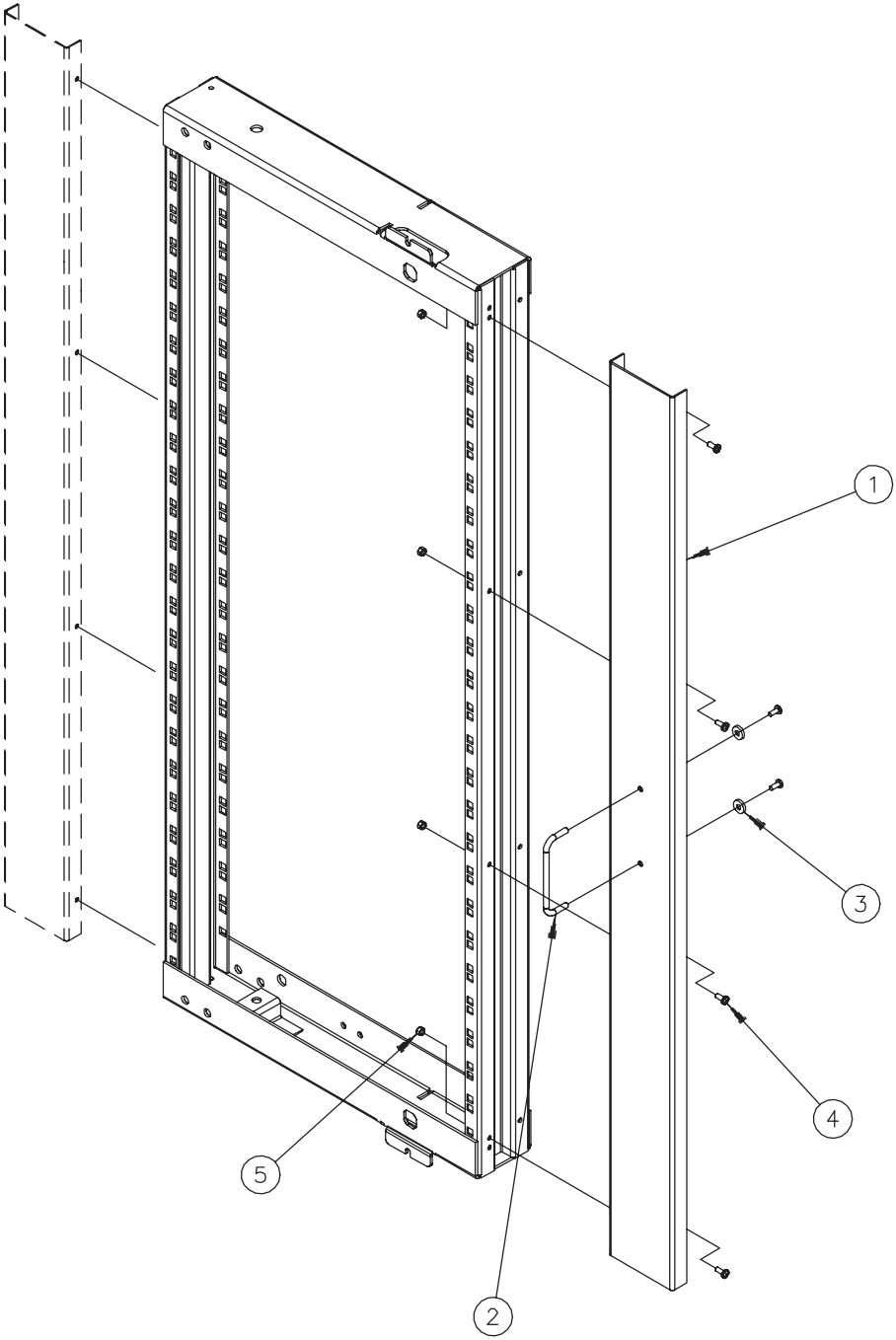

© 2018 Hoffman Enclosures Inc.

© 2018 Hoffman Enclosures Inc.
PH 763 422 2211 • nVent.com/HOFFMAN
P/N 87400744

87569277