For Variable Depth Disconnect Devices
And For Flexible Cable Disconnect Devices

Hoffman Bulletin A19 (painted steel)
Hoffman Bulletin A19S (stainless steel)
Wall-Mounted Disconnect Enclosures

© 2020 Hoffman Enclosures Inc.

⚠ WARNING

The functions, fits, and clearances of the installation described hereon are calculated from information supplied by the manufactures of the equipment to be installed. Be certain to check the function, fits, and clearances of all equipment both before and after installation to assure that it operates properly and safely and meets all applicable codes, standards, and regulations.

In the event the completed installation does not function properly or fails to meet any such codes, standards, or regulations, do not attempt to make alterations or operate the equipment. Report such facts immediately to:

Hoffman Customer Service
2100 Hoffman Way
Anoka, MN 55303
763 422 2211
http://hoffman.nvent.com/contact-us

NOTICE

To maintain the environmental rating of this enclosure: install in any opening, only listed or recognized disconnect devices, or conduit hubs that have the same environmental rating as the enclosure. Install in compliance with the installation instructions of the device.INSTALLATION STEPS

Step 1 – Drill mounting panel per manufacturer's instructions for disconnect device.

Step 2 – Install operating handle on enclosure flange in holes provided. Follow disconnect manufacturer's instructions.

Step 3 – Install disconnect device on panel. Follow disconnect manufacturer's instructions for installation and adjustment.

Step 4 – The nVent HOFFMAN installed door catch and door catch bracket feature vertical adjustment and two horizontal mounting positions. In some cases, it may be necessary to use the handle manufacture's supplied door catch.

See disconnect manufacturer's instructions regarding how to adjust door catch to properly interlock with the disconnect operating handle.

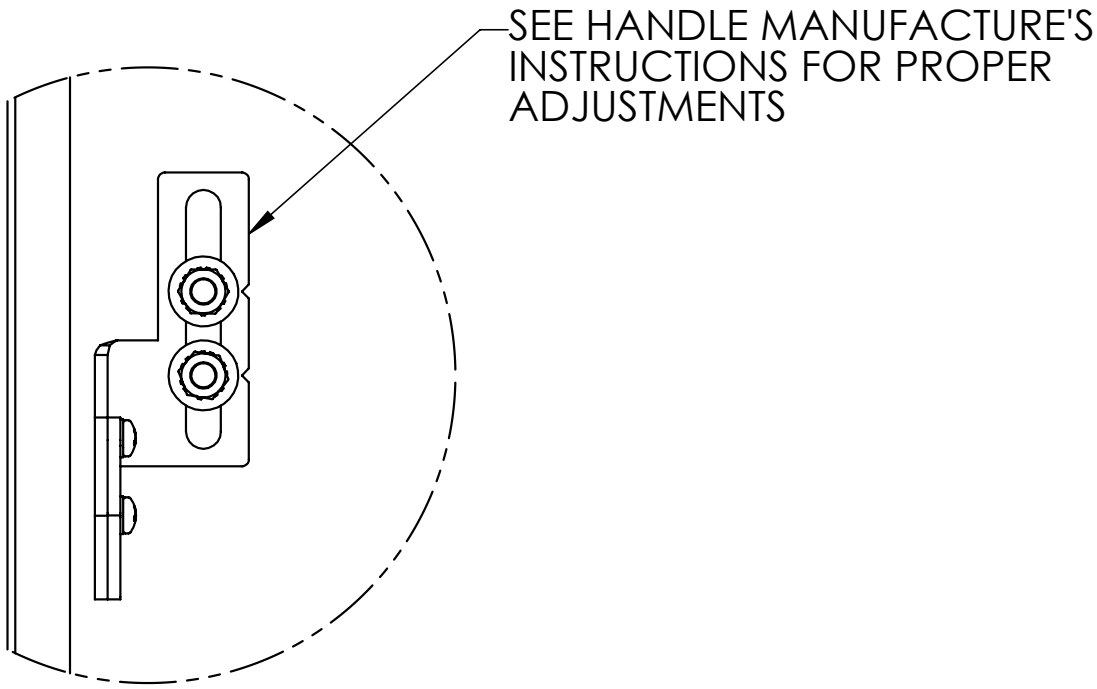

© 2020 Hoffman Enclosures Inc.

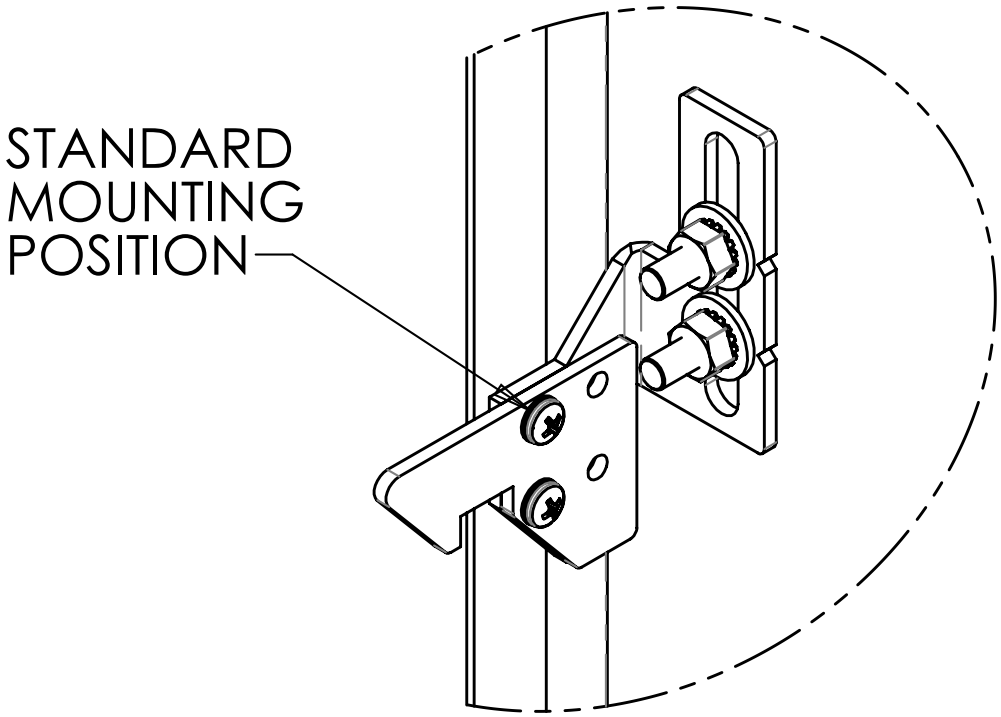

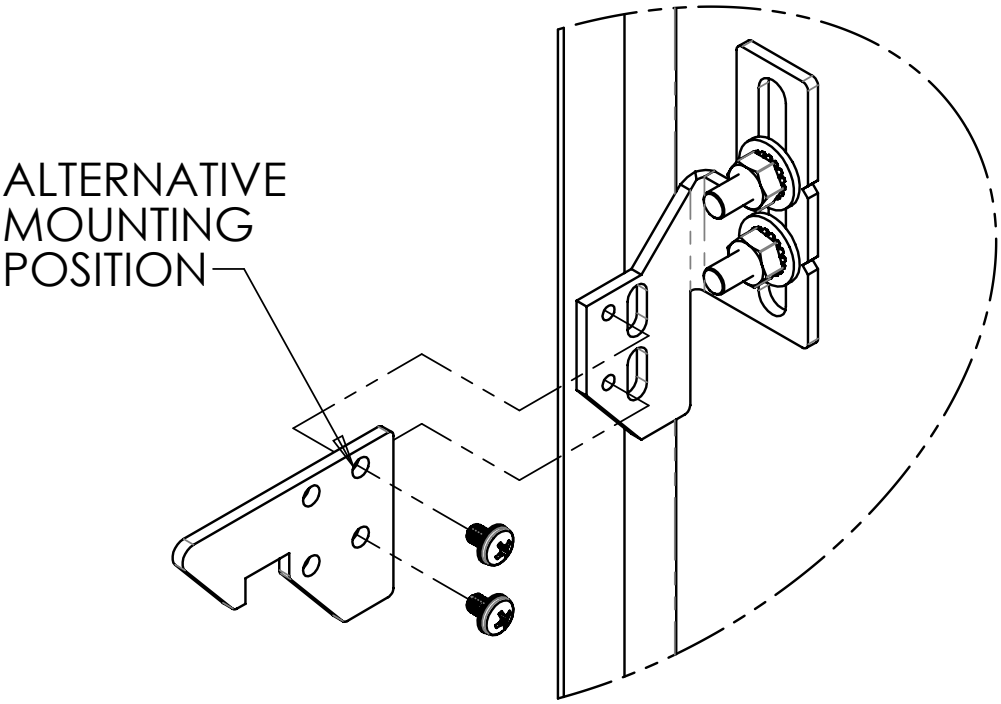

© 2020 Hoffman Enclosures Inc.

© 2020 Hoffman Enclosures Inc.