SYSPEND 281-MAX SUSPENSION SYSTEM, TYPE 12

INDUSTRY STANDARDS

Maintains NEMA Type 12 and IEC IP65 enclosure rating when properly installed per nVent HOFFMAN instructions.

APPLICATION

Variability in system configuration, advanced design and ease of assembly are key requirements when specifying an enclosure suspension system. The Syspend 281-Max features a modern industrial design, excellent ergonomics and multiple component combinations for an innovative system solution on a modular platform. At 3.3 ft. (1 m) the system supports up to 281 lb. (127.7 kg). Recommended for use with Syspend Aluminum HMI and Concept HMI enclosures.

FEATURES

- System supports up to 281 lb. and allows operators to easily move controls into and out of position
- Multiple modular components available to provide ergonomic, fatigue-free operation
- Clean lines and smooth transitions between tubes and system components provide attractive aesthetics and allow for ease of cleaning
- Tubing provides structural integrity and acts as equipment wiring conduit
- Vertical motion pedestal tubes provide versatile, height-adjustable solutions for pedestal mounting
- Secure attachment with sixfold positive connection between tubes and components along with recessed mounting areas in components; no additional safety drilling required
- Secure connections and easy adjustment of system alignment using tube setscrews, coated with LOCTITE, that seal threaded holes
- System design allows for user friendly readjustment at any time without disassembling the complete system
- Cable access covers available on all components
- Multiple tube lengths offer system design versatility
- Heavy-duty bearings in all movable joints for convenient, smooth operation and enhanced durability to withstand stresses of repeated use
- Variable torque adjustment available for all rotating components; general adjustment at the bearing with locking handle adjustment on enclosure couplings

SPECIFICATIONS

- Silver anodized aluminum tubes
- RAL 9005 black die-cast aluminum components
- Gray composite cable access covers
- Oil-resistant neoprene gaskets

SYSTEM LOAD CAPACITY

The Syspend 281-Max load graph is the result of load capacity tests. Please contact nVent HOFFMAN for specific application information.

Load Diagram

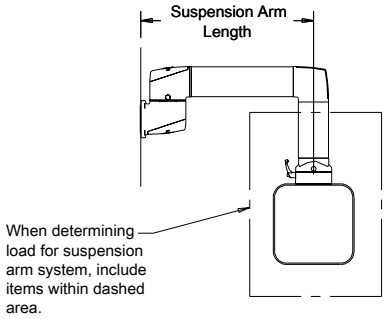

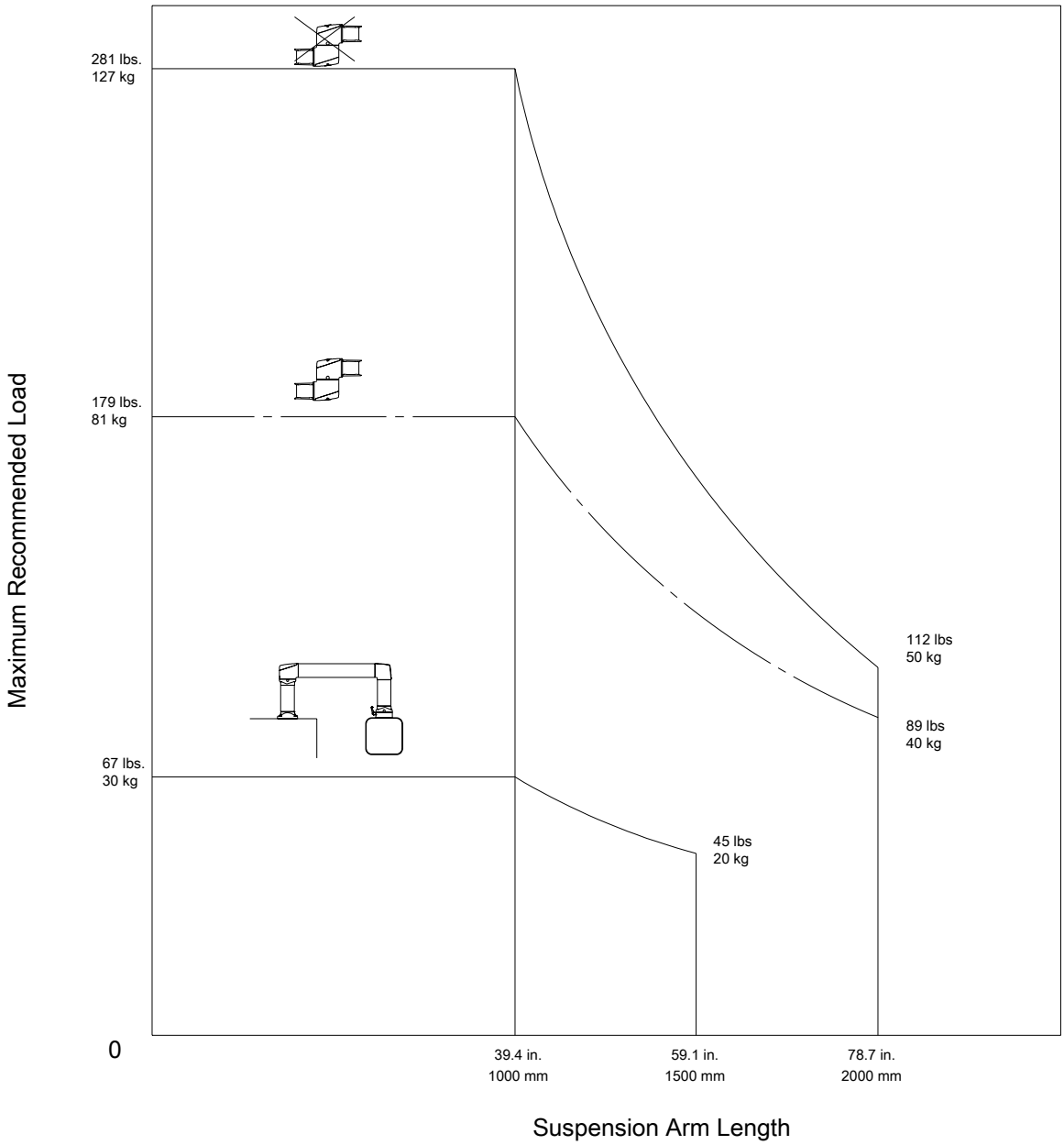

87957267

TUBES

Angled aluminum tubes provide structural integrity and act as conduit for equipment wiring. Tubes attach to system components with 6 setscrews on each end of the tube. (Setscrews are provided with the mating system components, not the tubes.) Setscrews allow for easy adjustment and leveling of the system. Setscrews are provided with LOCTITE to seal threaded holes and provide secure connections. Available in 8 standard lengths ranging from 250 mm to 2000 mm. Tubes 750 mm and longer include drilling template to assist with drilling and tapping the holes when the tube is cut to length.

BULLETIN: CS4

Catalog Number	L (mm)	L (in.)	Weight (lb.)
S2MT250	250	9.84	2.8
S2MT500	500	19.68	5.4
S2MT750	750	29.53	8.2
S2MT1000	1000	39.37	11.0
S2MT1250	1250	49.21	13.7
S2MT1500	1500	59.05	16.5
S2MT1750	1750	68.90	19.3
S2MT2000	2000	78.74	22.0

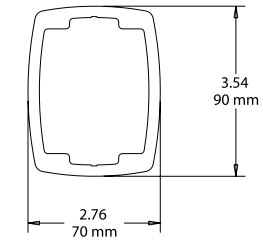

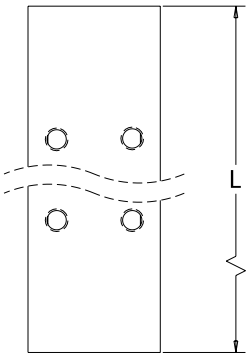

87955755

TUBE ADAPTER

Use a Tube Adapter when the tube is cut to length and it is not desirable to drill and tap new holes in the tube. Adapter attaches to the tube with internal setscrews and provides mounting holes at the end where the tube was cut. RAL 9005 black finish. Die-cast aluminum construction. Includes installation instructions, gasket and hardware for attaching to the tube.

BULLETIN: CS4

Catalog Number	Weight (lb.)
S2MTA	1.6

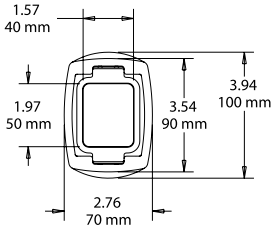

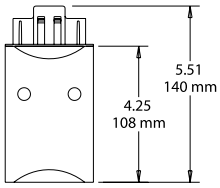

87955759

ANGLED COUPLING TILTED FORWARD

Use Angled Coupling Tilted Forward to mount enclosure at a 15-degree forward angle. Enclosure can be rotated 300 degrees and locked in position. Includes safety stop and maintenance-free bearing. RAL 9005 black finish. Die-cast aluminum construction. Includes installation instructions, gaskets, tube setscrews and enclosure mounting hardware.

BULLETIN: CS4

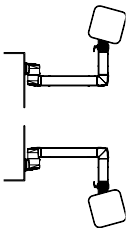

Catalog Number	Weight (lb.)
S2MACF	3.7

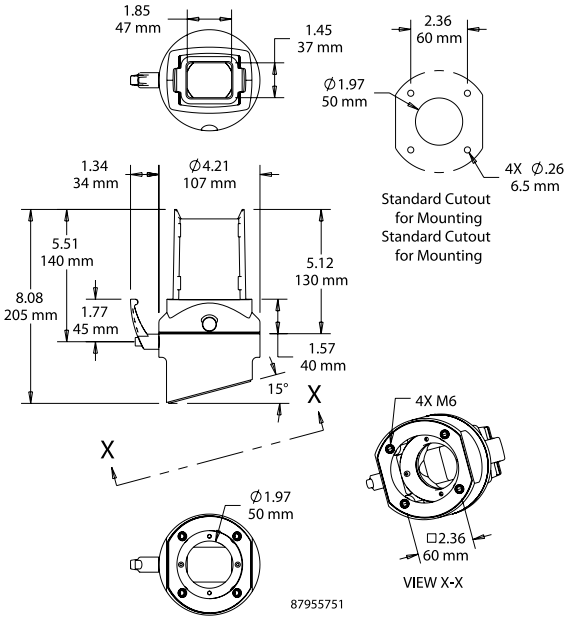

FLANGE COUPLING

Flange Coupling attaches a tube to the enclosure, enabling 300-degree enclosure rotation. Enclosure can be locked in position. Flange Coupling has safety stop and maintenance-free bearing. RAL 9005 black finish. Die-cast aluminum construction. Includes installation instructions, gaskets, tube setscrews and enclosure mounting hardware.

BULLETIN: CS4

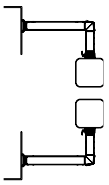

Catalog Number	Weight (lb.)
S2MFC	3.2

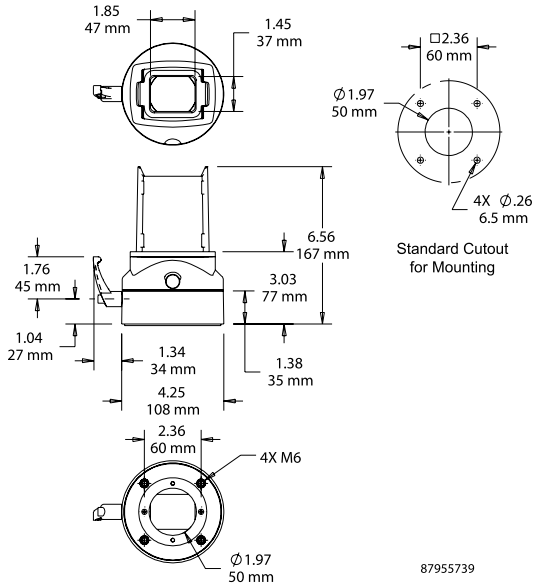

ANGLED COUPLING TILTED BACK

Use Angled Coupling Tilted Backward to mount enclosure at a 15-degree backward angle. Enclosure can be rotated 300 degrees and locked in position. Includes safety stop and maintenance-free bearing. RAL 9005 black finish. Die-cast aluminum construction. Includes installation instructions, gaskets, tube setscrews and enclosure mounting hardware.

BULLETIN: CS4

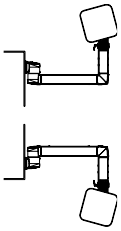

Catalog Number	Weight (lb.)
S2MACB	3.7

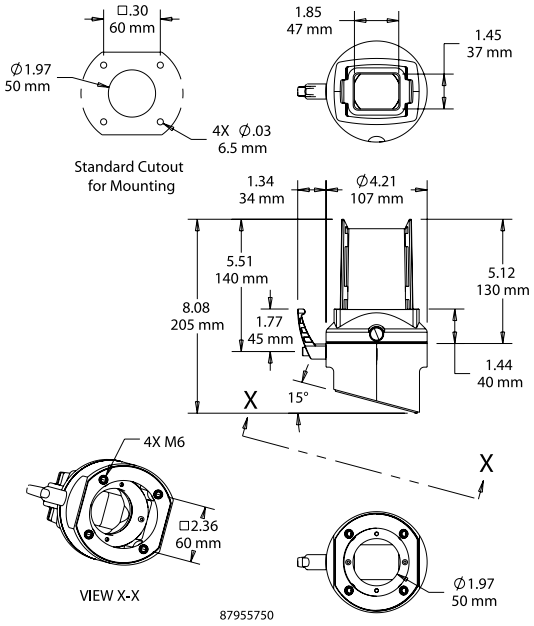

FLANGE ELBOW COUPLING

Flange Elbow Coupling attaches directly to the enclosure for applications where a vertical tube is not required. Enables enclosure to be rotated 300 degrees and locked in position. Includes safety stop and maintenance-free bearing. RAL 9005 black finish. Die-cast aluminum construction. Includes cable access cover, installation instructions, gaskets, tube setscrews and enclosure mounting hardware.

BULLETIN: CS4

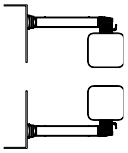

Catalog Number	Weight (lb.)
S2MFEC	4.6

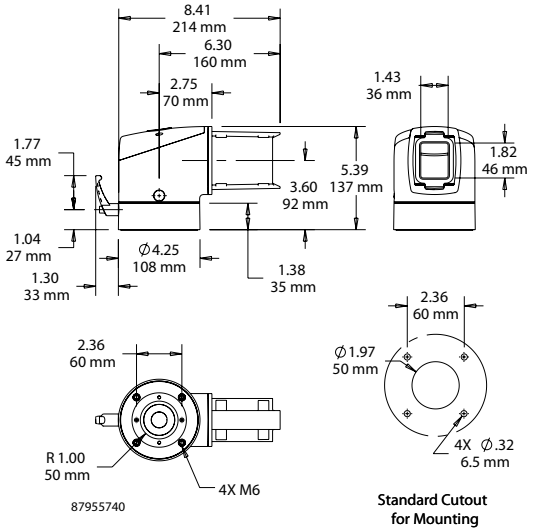

BASE COUPLING

Base Coupling attaches the enclosure directly to a horizontal surface. Enclosure can be rotated 300 degrees and locked in position. Includes safety stop and maintenance-free bearing. RAL 9005 black finish. Die-cast aluminum construction. Includes installation instructions, gaskets and enclosure mounting hardware. Surface mounting hardware not provided.

BULLETIN: CS4

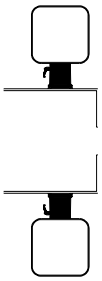

Catalog Number	Weight (lb.)
S2MBC	4.7

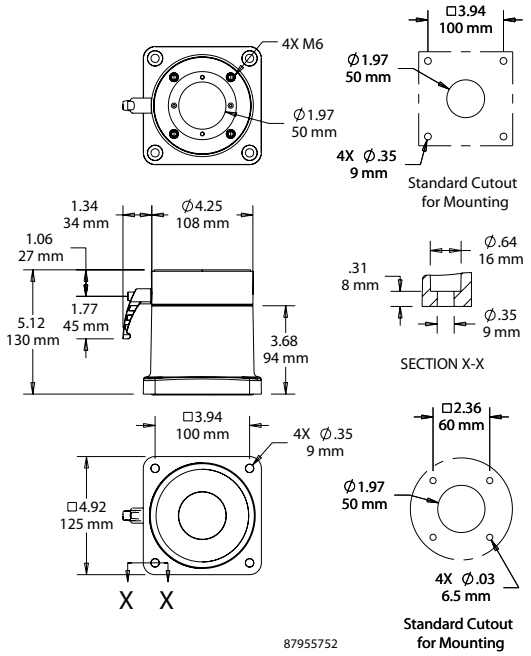

ANGLED ADAPTER, STEPLESS 30 DEGREES

Angled Adapter must be used in conjunction with a coupling (not compatible with S2MFC48). Enclosure angle can be adjusted forward or backward up to 30 degrees. RAL 9005 black finish. Die-cast aluminum construction. Includes installation instructions, gasket and enclosure mounting hardware.
Maximum load bearing capacity is 67 lb. (30.4 kg).

BULLETIN: CS4

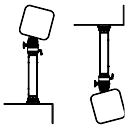

Catalog Number	Weight (lb.)
S2MAA	4.1

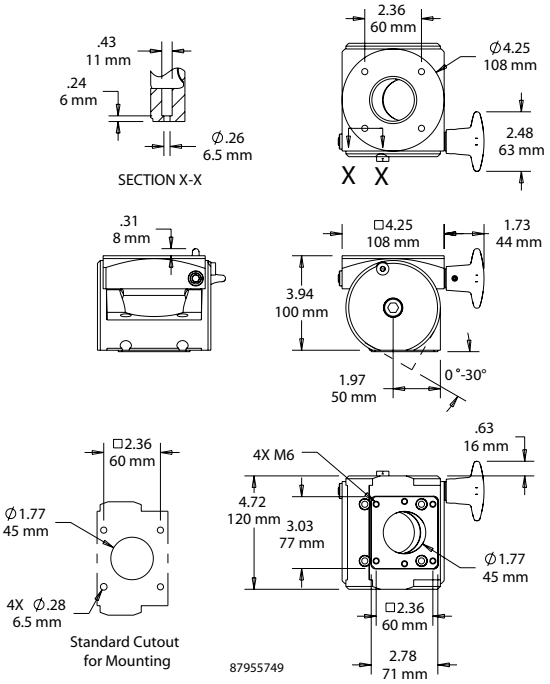

ELBOW

Elbow provides a 90-degree bend in the suspension system. RAL 9005 black finish. Die-cast aluminum construction. Includes removable cable access cover, installation instructions, gaskets and tube setscrews.

BULLETIN: CS4

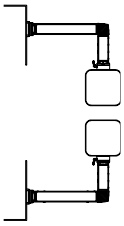

Catalog Number	Weight (lb.)
S2ME	3.7

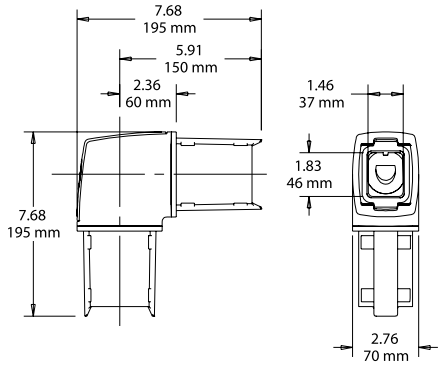

87955746

ROTATABLE ELBOW

Rotatable elbow provides a 90-degree bend in the suspension system and allows the vertical tube to rotate 300 degrees. Includes safety stop and maintenance-free bearing. RAL 9005 black finish. Die-cast aluminum construction. Includes removable cable access cover, installation instructions, gaskets and tube setscrews.

BULLETIN: CS4

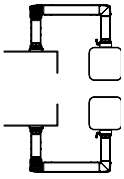

Catalog Number	Weight (lb.)
S2MER	5.4

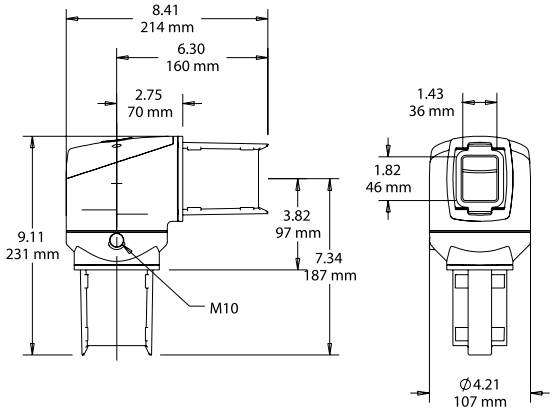

87955747

INTERMEDIATE JOINT

Use Intermediate Joint to join two horizontal tubes together for a longer run. Arm can be rotated or turned 300 degrees. Includes safety stop and maintenance-free bearing. RAL 9005 black finish. Die-cast aluminum construction. Includes two removable cable access covers, installation instructions, gaskets and tube setscrews.
Use of the Intermediate Joint reduces the system load capacity to 179 lb. (81.2 kg) at 3.3 ft. (1 m).

BULLETIN: CS4

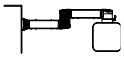

Catalog Number	Weight (lb.)
S2MIJ	6.5

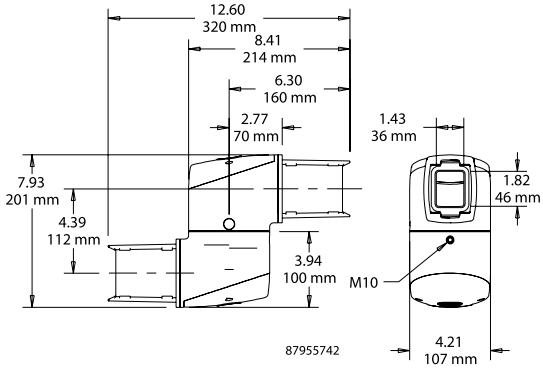

87955742

SET-UP JOINT

Set-Up Joint mounts suspension system to a horizontal surface. Arm can be rotated or turned 300 degrees. Includes safety stop and maintenance-free bearing. RAL 9005 black finish. Die-cast aluminum construction. Includes removable cable access cover, installation instructions, gaskets and tube setscrews. Surface mounting hardware not provided.

BULLETIN: CS4

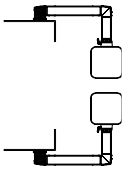

Catalog Number	Weight (lb.)
S2MSJ	5.0

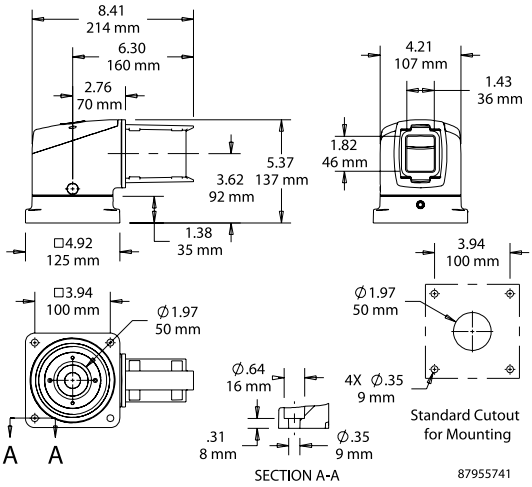

VERTICAL WALL JOINT

Vertical Wall Joint mounts suspension system to vertical surface and allows tube to extend vertically. Enables arm to be rotated or turned 300 degrees. Includes safety stop and maintenance-free bearing. RAL 9005 black finish. Die-cast aluminum construction. Includes removable cable access cover, installation instructions, gaskets and tube setscrews. Surface mounting hardware not provided.

BULLETIN: CS4

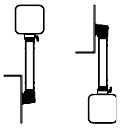

Catalog Number	Weight (lb.)
S2MWJV	5.4

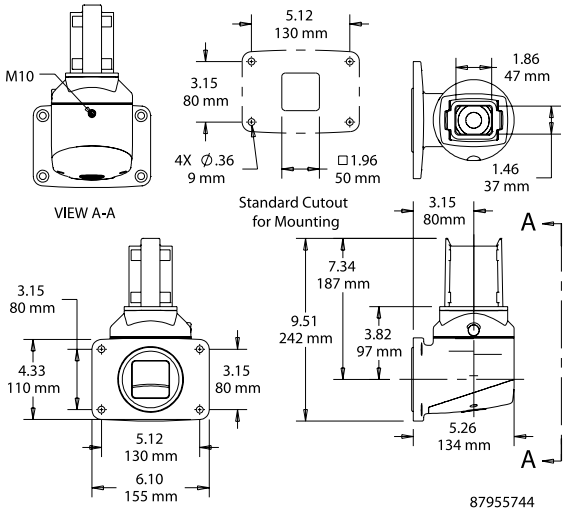

HORIZONTAL WALL JOINT

Horizontal Wall Joint mounts suspension system to vertical surface, allowing tube to extend horizontally. Arm can be rotated or turned 300 degrees. Includes safety stop and maintenance-free bearing. RAL 9005 black finish. Die-cast aluminum construction. Includes two removable cable access covers, installation instructions, gaskets and tube setscrews. Surface mounting hardware not provided.

BULLETIN: CS4

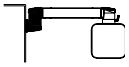

Catalog Number	Weight (lb.)
S2MWJH	6.4

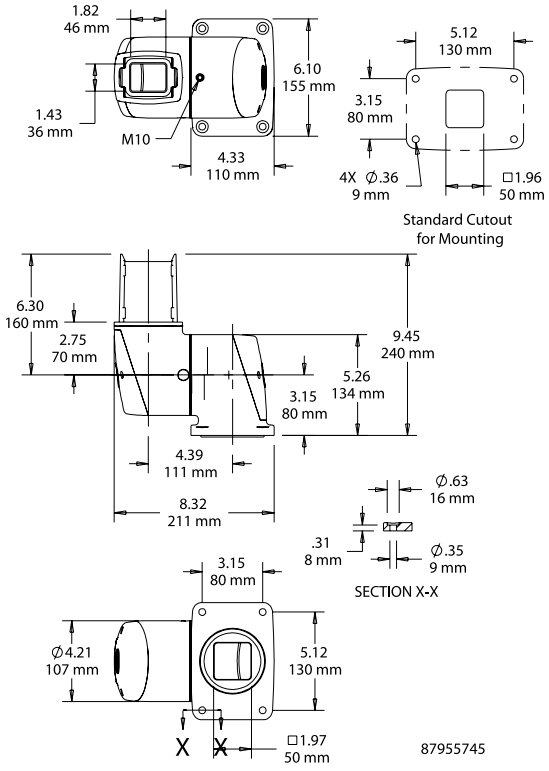

WALL FLANGE

Wall Flange allows for fixed positioning on a horizontal or vertical surface when rotation is not needed. RAL 9005 black finish. Die-cast aluminum construction. Includes installation instructions, gaskets and tube setscrews. Surface mounting hardware not provided.

BULLETIN: CS4

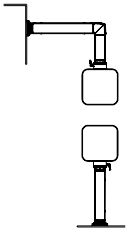

Catalog Number	Weight (lb.)
S2MWF	2.8

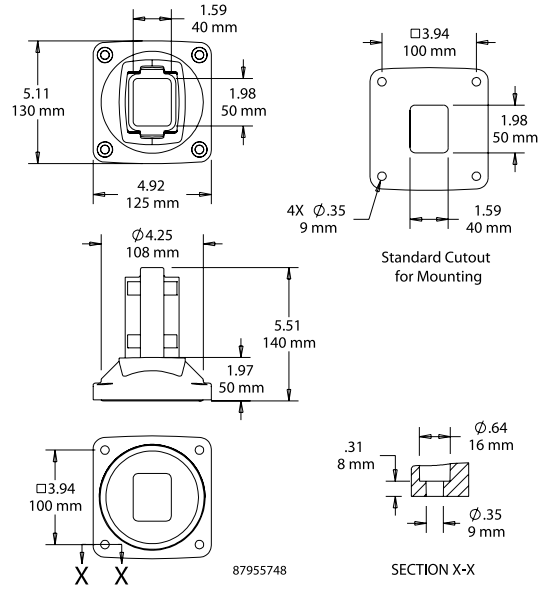

ROTARY BASE

Rotary Base allows the entire suspension system to rotate at the point of attachment on a horizontal surface. Arm can be rotated or turned 300 degrees. Includes safety stop and maintenance-free bearing. RAL 9005 black finish. Die-cast aluminum construction. Includes installation instructions, gaskets and tube setscrews. Surface mounting hardware not provided.

BULLETIN: CS4

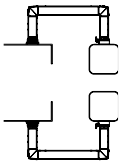

Catalog Number	Weight (lb.)
S2MRB	3.9

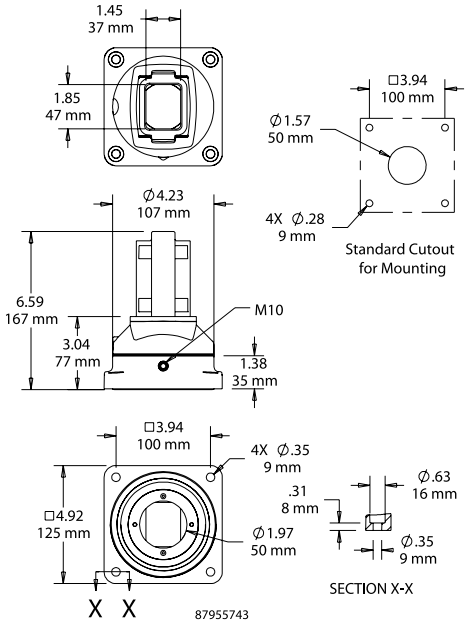

48-MM ROUND TUBE FLANGE COUPLING AND ADAPTER

Use Flange Coupling to attach the Vertical Motion Pedestal Tube to the enclosure. Enclosure can be rotated 300 degrees and locked in position. Includes safety stop and maintenance-free bearing. RAL 9005 black finish. Die-cast aluminum construction. Includes installation instructions, gaskets and enclosure mounting hardware.

Coupling attaches to enclosure using a 48 x 48-mm hole pattern. An adapter is required to attach the coupling to a standard nVent HOFFMAN HMI enclosure that uses a 60 x 60-mm hole pattern (i.e., required for attaching to Concept HMI, CC2000, CC4000). Includes safety stop and maintenance-free bearing. RAL 9005 black finish. Die-cast aluminum construction. Includes installation instructions, gaskets and enclosure mounting hardware.

BULLETIN: CS4

Catalog Number	Description	Weight (lb.)
S2MFC48	Flange Coupling (Requires use of S2MA48 for enclosure with 60 x 60-mm hole pattern)	3.9
S2MA48	Adapter	0.2

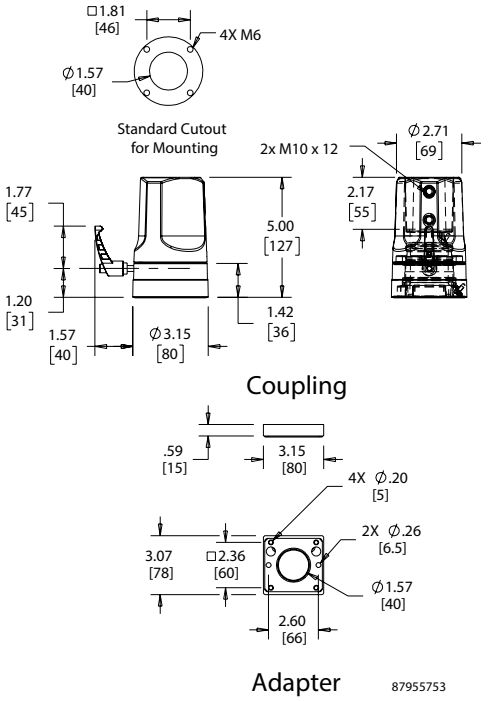

VERTICAL MOTION PEDESTAL TUBES

Height-adjustable tubes allow enclosure to be positioned at the optimal viewing height for different operators. Requires the 48-mm Round Tube Flange Coupling (S2MFC48) and Adapter (S2MA48) for attachment to Hoffman enclosures with a 60 x 60-mm hole pattern (i.e., required for attaching to Concept HMI, CC2000, CC4000).

- Adjustable from 1130 mm (44.49 in.) to 1380 mm (54.33 in.) with internal gas springs
- Four models support loads ranging from 11 to 77 lb. (4.9 to 34.9 kg)
- Height is fixed in place at any position by locking handle
- Cables are separated from gas springs inside the tube
- Internal strain-relief for cables inside the tube
- Can be attached to Small Pedestal Base, Large Pedestal Base, Vertical Wall Joint, Wall Flange, Rotary Base, Elbow or Rotatable Elbow
- Aluminum construction

Tube cannot be inverted for overhead mounting on the enclosure.
The weight of the coupling, adapter plate, enclosure and internal components must be factored into the load when selecting a tube.

BULLETIN: CS4

Catalog Number	L Max. mm/in.	L Min. mm/in.	Load Capacity	Weight (lb.)
S2M10VP22	350 13.78	100 3.94	11-22 lb.	15.5
S2M10VP37	350 13.78	100 3.94	22-37 lb.	15.5
S2M10VP57	350 13.78	100 3.94	37-57 lb.	15.5
S2M10VP77	350 13.78	100 3.94	57-77 lb.	15.5

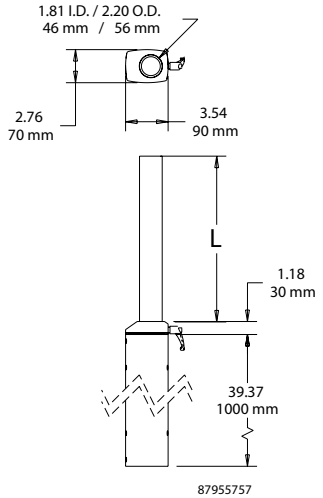

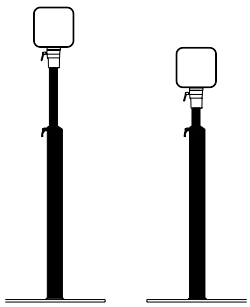

VERTICAL MOTION PEDESTAL TUBE LOAD CHART

Ambient Temperature				
40°C	100 N (6-11 kg)	150 N (11-19 kg)	200 N (19-29 kg)	300 N (29-39 kg)
30°C	100 N (5.5-10.5 kg)	150 N (10.5-18 kg)	200 N (18-27.5 kg)	300 N (27.5-37 kg)
20°C	100 N (5-10 kg)	150 N (10-17 kg)	200 N (17-26 kg)	300 N (26-35 kg)

Damper Force/Total Weight

When using a Vertical Motion Pedestal the overall system load is limited to the load capacity of the Vertical Motion Pedestal.

SMALL PEDESTAL BASE

Tubes attach directly to Small Pedestal Base. RAL 9005 black finish. Constructed from 3/8-in. thick steel plate. Includes installation instructions, cable ties and tube setscrews. Surface mounting hardware not provided.
Supports loads per Load Rating Graph.

BULLETIN: CS4

Catalog Number	Weight (lb.)
S2MPBS	29.1

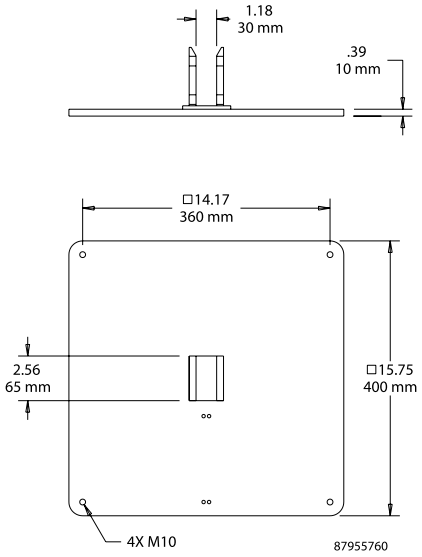

LARGE PEDESTAL BASE

Tubes attach directly to Large Pedestal Base. RAL 9005 black finish. Cast aluminum construction. Includes installation instructions and tube setscrews. Surface mounting hardware not provided.
Supports loads per Load Rating Graph.

BULLETIN: CS4

Catalog Number	Weight (lb.)
S2MPBL	25.7

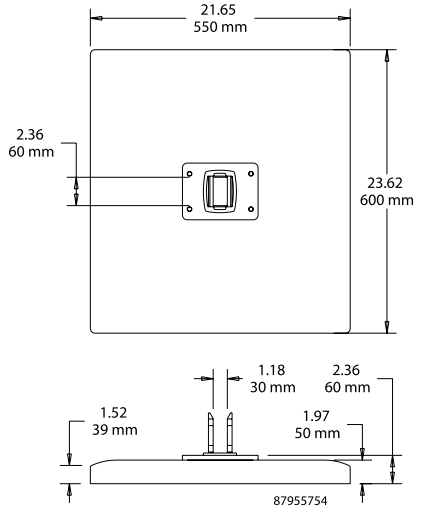

SWIVEL TILT COUPLING VERTICAL

Syspend 281-MAX Swivel Tilt Coupling Vertical allows connection of panels, displays, and enclosures that can be mounted from the top or bottom. Rotation angle 300 degrees with stop. Tilt angle with adjustable stop +/- 105 degrees (without attachments). Screwed mounting opening, suitable for feed-through of DVI connectors.

BULLETIN: CS4

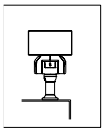

89230125

Catalog Number	Weight (lb.)
S2MSCV	10.32

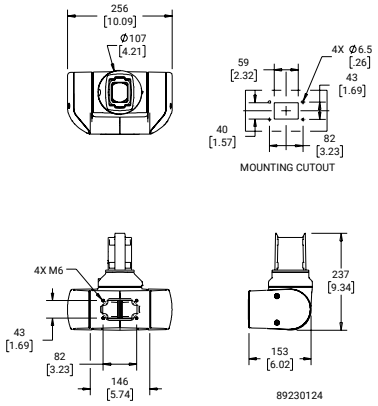

SWIVEL TILT COUPLING HORIZONTAL

Syspend 281-MAX Swivel Tilt Coupling Horizontal allows connection of panels, displays, and enclosures that can be mounted from the top or bottom. Rotation angle 300 degrees with stop. Tilt angle with adjustable stop +/- 105 degrees (without attachments). Screwed mounting opening, suitable for feed-through of DVI connectors.

BULLETIN: CS4

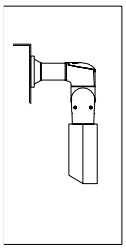

89230127

Catalog Number	Weight (lb.)
S2MSCH	11.48

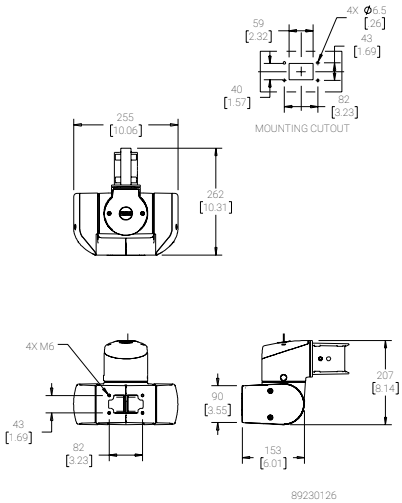

FLEX BASE

Syspend 281-MAX Flex Base offers a pedestal solution for operator stations to give flexible positions, manoeuverability, and also stabilty in production. Choose the correct adapter plate for your application needs. Mount Castors to the bottom to roll around Flex Base. Mount Adjsutable Feet to the bottom to help secure the Flex Base. Maxium of 4 additional weights can be installed to help stable the Flex base. Intergrated earthing screws. Plenty of space for cable routing.

BULLETIN: CS4

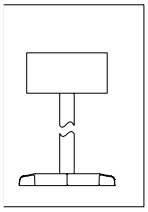

89230131

Catalog Number	Weight (lb.)
S2MFBG	24.31

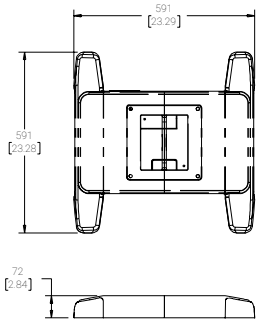

89230130

SYSPEND 180/281-MAX FLEX BASE ADAPTER PLATE

Syspend 180/281-MAX Flex Base Adapter Plate is attached to the Flex Base to allow connection with the Syspend 180/281-MAX tubes. Assembled Syspend 180 HMI Arm System has a max weight load of 180 lb. (81.6 kg). Assembled Syspend 281 HMI Arm System has a max weight load of 281 lb. (127.7 kg).

BULLETIN: CS4

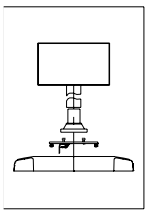

89230136

Catalog Number	Weight (lb.)
S2MSYSAPG	7.41

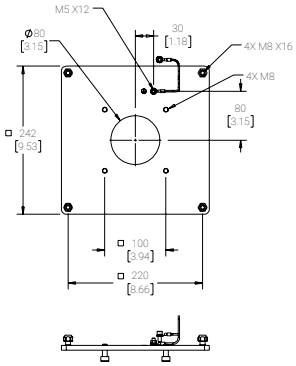

89230135

VESA ADAPTER PLATE

Syspend 281-MAX VESA Adpater Plate used to mount a monitor to the Swivel Tilt Coupling bracket. Compadable with 75/100 hole pattern. VESA 75/100 hole pattern. Helps mount Swivel Tilt Couplings to panels, displays, and IPCs.

BULLETIN: CS4

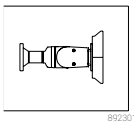

Catalog Number	Weight (lb.)
S2MVAP	.68

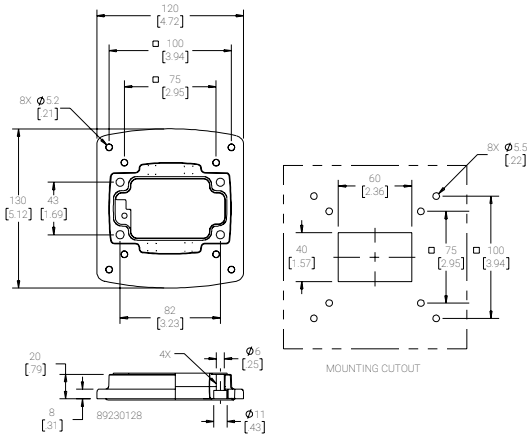

ADJUSTABLE FEET

Syspend 281-MAX Adjustable Feet will screw to the bottom of the Flex Base to help balance and keep stable. Adjustable Overall Height: 35-45mm. Load capacity per adjustable feet: 110 lbs (50 kg). Four pieces per set.

BULLETIN: CS4

Catalog Number	Weight (lb.)
S2MFBF	.42

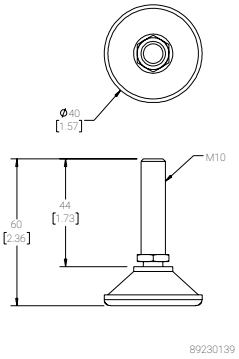

WEIGHT PIECE

Syspend 281-MAX Weight Piece helps increase the stability of the Flex Base. Four maximum weights can be installed on one flex base. Self forming screw included. Weights are installed from the bottom of the Flex Base.

BULLETIN: CS4

Catalog Number	Weight (lb.)
S2MFBW	4.53

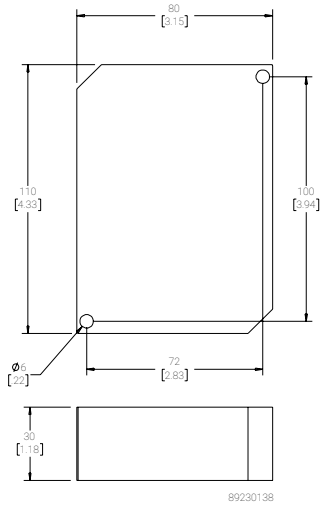

CASTERS

Syspend 281-MAX Casters will screw to the bottom of the Flex Base to have a mobile system. Load capacity per roll: 154 pounds (70 kg). Four pieces per set.

BULLETIN: CS4

Catalog Number	Weight (lb.)
S2MFBC	2.4

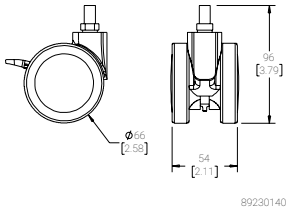

ERGO SLIDE WITH KEYBOARD TRAY

Syspend 281-MAX Ergo Slide with Keyboard Tray can rotate tool-free and can adjust up and down. Can be used with a suspension arm system or free standing system. Mousepad extended to the left or right. The connection is made with mechanical processing on the tube. Two plastic injection molded parts (common parts) are connected and fixed by a screw.

BULLETIN: CS4

Catalog Number	Weight (lb.)
S2MESAK	18.66

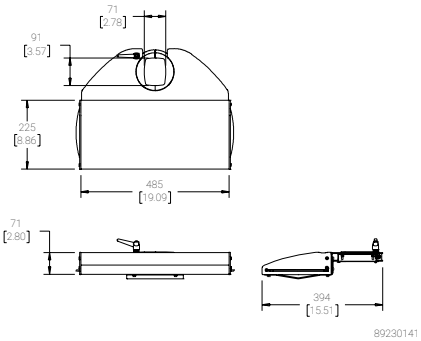

ERGO SLIDE WITH VESA HOLDER

Syspend 281-MAX Ergo Slide with VESA Holder can rotate tool-free and can adjust up and down. Can hold a monitor with a VESA hole pattern of 75/100. VESA Adapter Plate included.

BULLETIN: CS4

Catalog Number	Weight (lb.)
S2MESVM	4.24

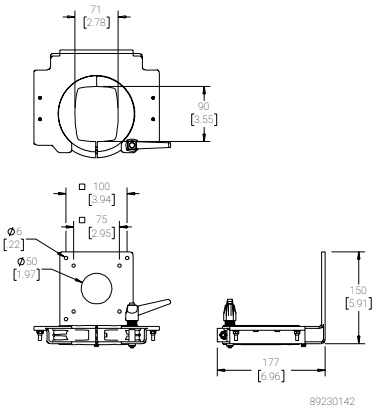

ERGO SLIDE MOUSE TRAY

Syspend 281-MAX Ergo Slide Mouse Tray can rotate tool-free and adjust up and down. Can be used with a suspension arm system. The mouse tray can be mounted on all current keyboard shelves variants. Max mouse size is 68 x 43 mm (2.68 x 1.69).

BULLETIN: CS4

Catalog Number	Weight (lb.)
S2MESMG	.67

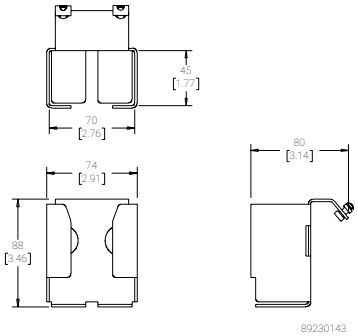

TUBE COVER

Syspend 281-MAX Tube Cover will help cover the end of the support tube. Mounts at end of support tube. Helps keep dirt, dust, and water out.

BULLETIN: CS4

Catalog Number	Weight (lb.)
S2MESTC	.25

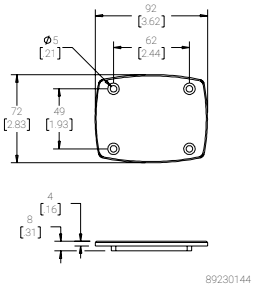

TUBE WALL BRACKET

Syspend 281-MAX Tube Wall Bracket used to mount the 281-MAX tube vertically in a wall mounting application. Includes two brackets and a tube for installation. Supports top and bottom.

BULLETIN: CS4

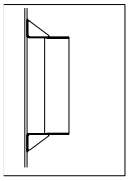

Catalog Number	Weight (lb.)
S2MESWB	2.81

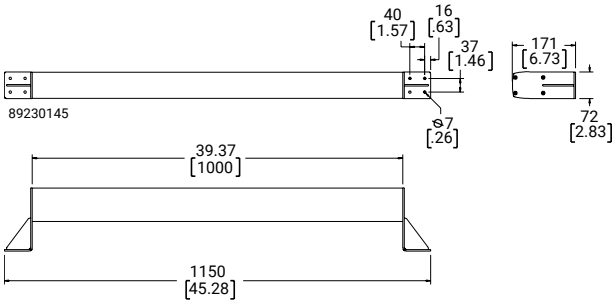

HANDLE SCREW

Syspend 281-MAX Handle Screw will replace the screw for clamping the ergo slide. Enables tool-free adjustment. Enables tool-free adjustment.

BULLETIN: CS4

Catalog Number	Weight (lb.)
S2MESHS	.26

LIGHT SIGNAL ADAPTERS

Light Signal Adapters are available in either round or elbow cover versions and provide a means for attaching signal lights. Signal lights are not included. Gray composite cover caps include a gasket, attachment hardware and post and replace the caps provided with other system components.

BULLETIN: CS4

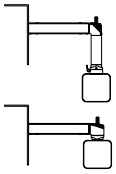

Catalog Number	Description	Weight (lb.)
S2MLSAR	Round Cover	0.3
S2MLSAE	Rectangular Cover	0.3

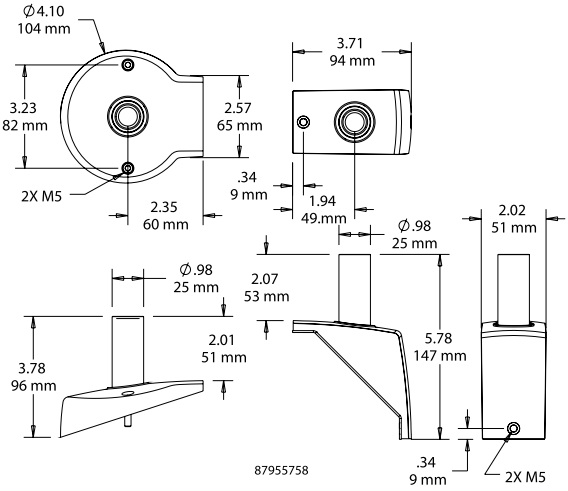

ROTATION LIMITERS

Rotation limiters can be retro-fit on coupling and joint components and are adjustable in increments of 13.7 degrees. Limits rotation of couplings and joints which nornally rotate 300 degrees. Kit includes ten steel balls, plug and installation instructions.

BULLETIN: CS4

Catalog Number	Weight (lb.)
S2MRL	0.1

TUBE HOLE PLUGS

Plastic hole plugs cover up the set screws in the tubes. Kit includes 50 hole plugs. Hole plugs are not needed to maintain the suspension system's NEMA Type 12 rating but provide an attractive smooth finish for the tube. Gray RAL 9006 color.

BULLETIN: CS4

Catalog Number
S2MTHP

SYSTEM CONFIGURATIONS

Note to Specifier:

Select suspension system sizing using the Syspend 281-MAX load capacity chart.

1. **Tube catalog numbers are not included in configuration tables.**
2. **There are multiple configurations possible with many of the options shown. Components can be inverted in all cases except for Vertical Motion Pedestal Tube. For illustration purposes, configuration A shows how components can be inverted or used with varying enclosure couplings.**
3. **When using Vertical Motion Pedestal the overall system load is limited to load capacity of Vertical Motion Pedestal.**
4. **No tube section used vertically should exceed 59.05 inches (1500 mm).**

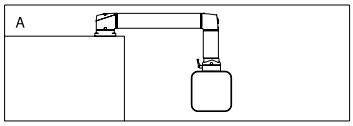

87956903

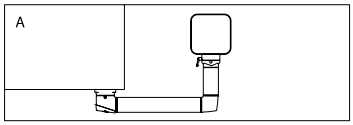

87956961

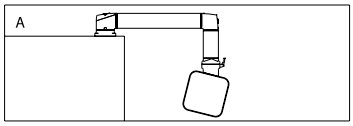

87956963

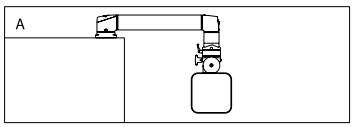

87956964

A

Description	Qty.	Catalog Number
Set-Up joint	1	S2MSJ
Elbow	1	S2ME
Flange Coupling or Angled Coupling (Tilted Back) or Angled Coupling (Tilted Forward)	1 1 1	S2MFC S2MACB S2MACF
For tilt, add Angled Adapter to coupling	1	S2MAA

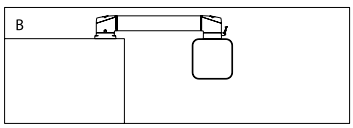

87956965

B

Description	Qty.	Catalog Number
Set-Up joint	1	S2MSJ
Flange Elbow Coupling	1	S2MFEC
For tilt, add Angled Adapter to coupling	1	S2MAA

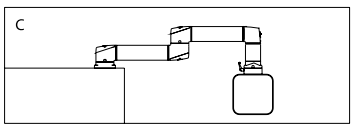

87956966

C

Description	Qty.	Catalog Number
Set-Up joint	1	S2MSJ
Intermediate Joint	1	s2mij
Elbow	1	s2me
Flange Coupling or Angled Coupling (Tilted Back) or Angled Coupling (Tilted Forward)	1 1 1	S2MFC S2MACB S2MACF
For tilt, add Angled Adapter to coupling	1	S2MAA

D

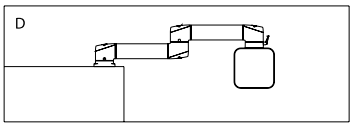

87956967

Description	Qty.	Catalog Number
Set-Up joint	1	S2MSJ
Intermediate Joint	1	S2MIJ
Flange Elbow Coupling	1	S2MFEC
For tilt, add Angled Adapter to coupling	1	S2MAA

E

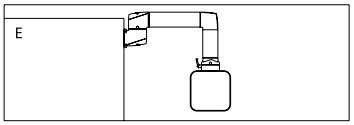

87956969

Description	Qty.	Catalog Number
Wall Joint, Horizontal	1	S2MWJH
Elbow	1	S2ME
Flange Coupling or Angled Coupling (Tilted Back) or Angled Coupling (Tilted Forward)	1 1 1	S2MFC S2MACB S2MACF
For tilt, add Angled Adapter to coupling	1	S2MAA

F

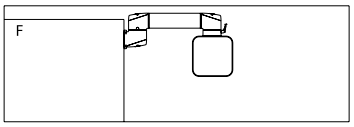

87956970

Description	Qty.	Catalog Number
Wall Joint, Horizontal	1	S2MWJH
Flange Elbow Coupling	1	S2MFEC
For tilt, add Angled Adapter to coupling	1	S2MAA

G

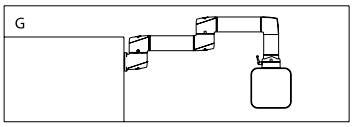

87956971

Description	Qty.	Catalog Number
Wall Joint, Horizontal	1	S2MWJH
Intermediate Joint	1	S2MIJ
Elbow	1	S2ME
Flange Coupling or Angled Coupling (Tilted Back) or Angled Coupling (Tilted Forward)	1 1 1	S2MFC S2MACB S2MACF
For tilt, add Angled Adapter to coupling	1	S2MAA

H

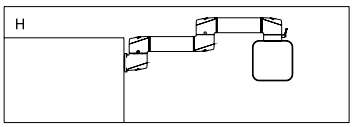

87956973

Description	Qty.	Catalog Number
Wall Joint, Horizontal	1	S2MWJH
Intermediate Joint	1	S2MIJ
Flange Elbow Coupling	1	S2MFEC
For tilt, add Angled Adapter to coupling	1	S2MAA

I

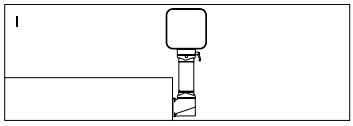

87956974

Description	Qty.	Catalog Number
Wall Joint, Vertical	1	S2MWJV
Flange Coupling or Angled Coupling (Tilted Back) or Angled Coupling (Tilted Forward)	1 1 1	S2MFC S2MACB S2MACF
For tilt, add Angled Adapter to coupling	1	S2MAA

J

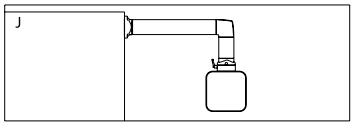

87956975

Description	Qty.	Catalog Number
Wall Flange	1	S2MWF
Elbow	1	S2ME
Flange Coupling or Angled Coupling (Tilted Back) or Angled Coupling (Tilted Forward)	1 1 1	S2MFC S2MACB S2MACF
For tilt, add Angled Adapter to coupling	1	S2MAA

K

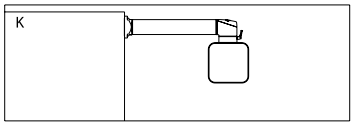

87956976

Description	Qty.	Catalog Number
Wall Flange	1	S2MWF
Flange Elbow Coupling	1	S2MFEC
For tilt, add Angled Adapter to coupling	1	S2MAA

L

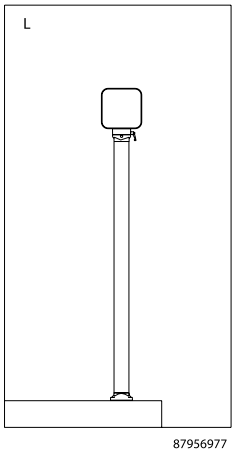

87956977

Description	Qty.	Catalog Number
Wall Flange	1	S2MWF
Flange Coupling or Angled Coupling (Tilted Back) or Angled Coupling (Tilted Forward)	1 1 1	S2MFC S2MACB S2MACF
For tilt, add Angled Adapter to coupling	1	S2MAA

M

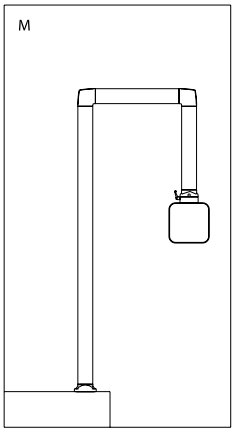

87956979

Description	Qty.	Catalog Number
Wall Flange	1	S2MWF
Elbow	2	S2ME
Flange Coupling or Angled Coupling (Tilted Back) or Angled Coupling (Tilted Forward)	1 1 1	S2MFC S2MACB S2MACF
For tilt, add Angled Adapter to coupling	1	S2MAA

N

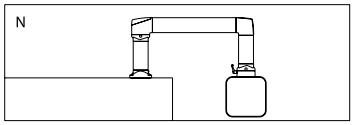

87956980

Description	Qty.	Catalog Number
Wall Flange	1	S2MWF
Rotary Elbow	1	S2MER
Elbow	1	S2ME
Flange Coupling or Angled Coupling (Tilted Back) or Angled Coupling (Tilted Forward)	1 1 1	S2MFC S2MACB S2MACF
For tilt, add Angled Adapter to coupling	1	S2MAA

O

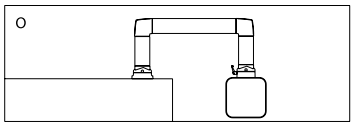

87956981

Description	Qty.	Catalog Number
Rotary Base	1	S2MRB
Elbow	2	S2ME
Flange Coupling or Angled Coupling (Tilted Back) or Angled Coupling (Tilted Forward)	1 1 1	S2MFC S2MACB S2MACF
For tilt, add Angled Adapter to coupling	1	S2MAA

P

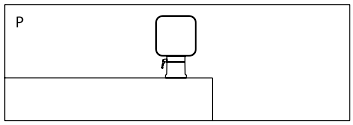

87956982

Description	Qty.	Catalog Number
Base Coupling	1	S1MBC
For tilt, add Angled Adapter to coupling	1	S2MAA

Q

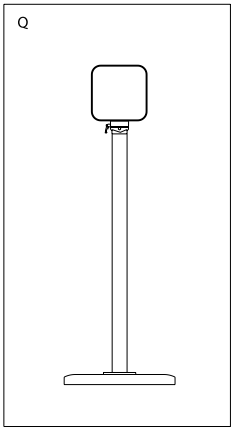

87956983

Description	Qty.	Catalog Number
Large Pedestal Base or Small Pedestal Base	1 1	S2MPBL S2MPBS
Flange Coupling or Angled Coupling (Tilted Back) or Angled Coupling (Tilted Forward)	1 1 1	S2MFC S2MACB S2MACF
For tilt, add Angled Adapter to coupling	1	S2MAA

R

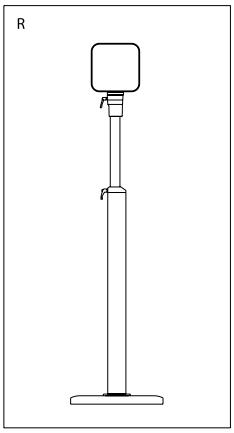

87956984

Description	Qty.	Catalog Number
Large Pedestal Base or Small Pedestal Base	1 1	S2MPBL S2MPBS
Flange Coupling, 48-mm Round Tube	1	S2MFC48
Adapter, 48-mm Round Tube	1	S2MA48

S

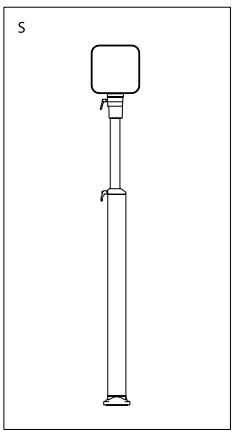

87956985

Description	Qty.	Catalog Number
Wall Flange	1	S2MWF
Flange Coupling, 48-mm Round Tube	1	S2MFC48
Adapter, 48-mm Round Tube	1	S2MA48

T

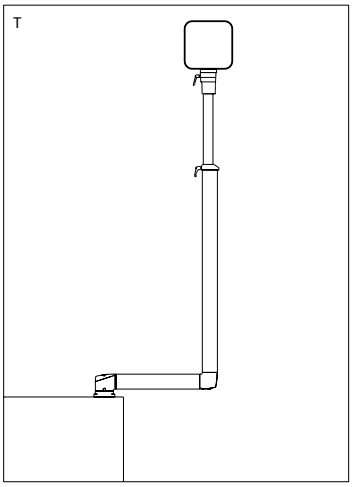

89104512

Description	Qty.	Catalog Number
Set-Up Joint	1	S2MSJ
Elbow	1	S2ME
Flange Coupling, 48mm Round Tube	1	S2MFC48
Adapter, 48mm Round Tube	1	S2MA48

U

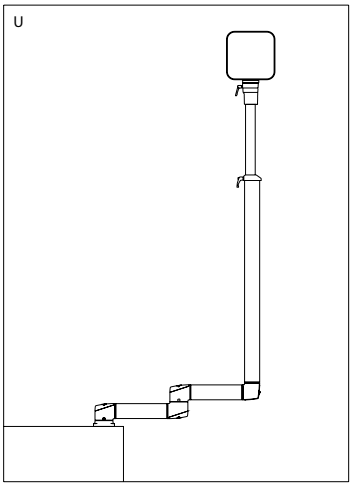

89104514

Description	Qty.	Catalog Number
Set-Up Joint	1	S2MSJ
Intermediate Joint	1	S2MIJ
Flange Coupling, 48mm Round Tube	1	S2MFC48
Adapter, 48mm Round Tube	1	S2MA48

V

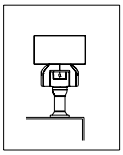

89230125

V

Description	Qty.	Catalog Number
281-Max Wall Flange	1	S2MWF
281-Max Swivel Tilt Coupling Vertical	1	S2MSCV

W

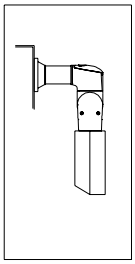

89230127

W

Description	Qty.	Catalog Number
281-Max Wall Flange	1	S2MWF
281-Max Swivel Tilt Coupling Horizontal	1	S2MSCH

X

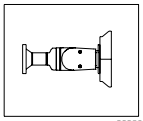

89230129

X

Description	Qty.	Catalog Number
281-Max Wall Flange	1	S2MWF
281-Max VESA Adapter Plate	1	S2MVAP

Y

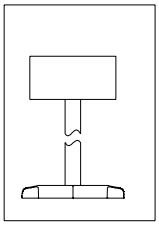

89230131

Y

Description	Qty.	Catalog Number
281-Max Flex Base	1	S2MFBG

Z

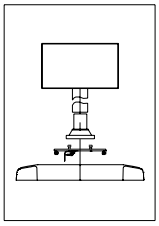

89230136

Z

Description	Qty.	Catalog Number
281-Max Wall Flange	1	S2MWF
281-Max Flex Base Adapter Plate	1	S2MSYSAPG

Notes