# ProLine

Side Cover
Seitenblech
Couverture Latérale
Tapa Lateral

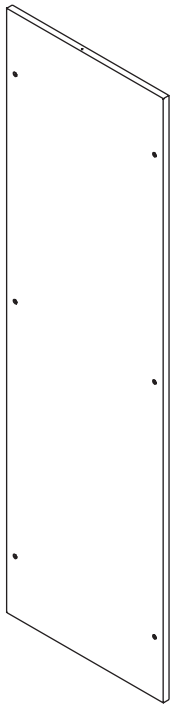


© 2018 Hoffman Enclosures Inc.
PH 763 422 2211 • nVent.com/HOFFMAN
P/N 60127042

87563480

| | |
|---|---|
| 1 (2X) | 2 M6-1X16 (6X) |

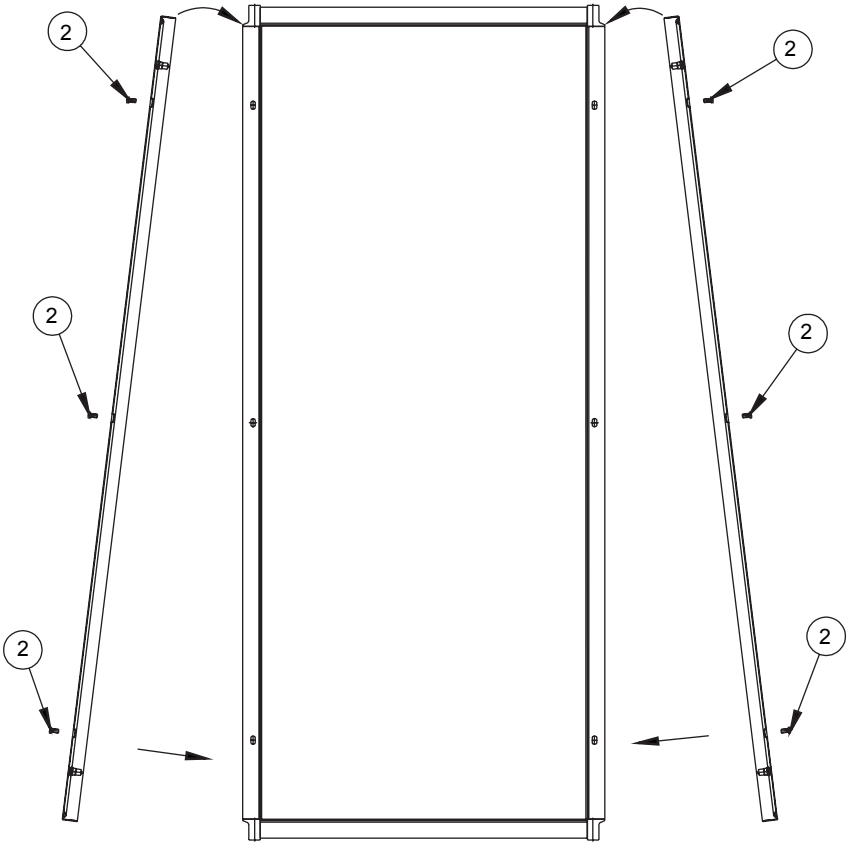



© 2018 Hoffman Enclosures Inc.

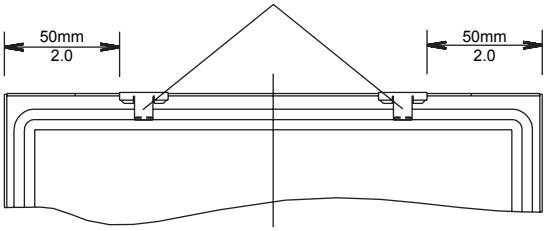


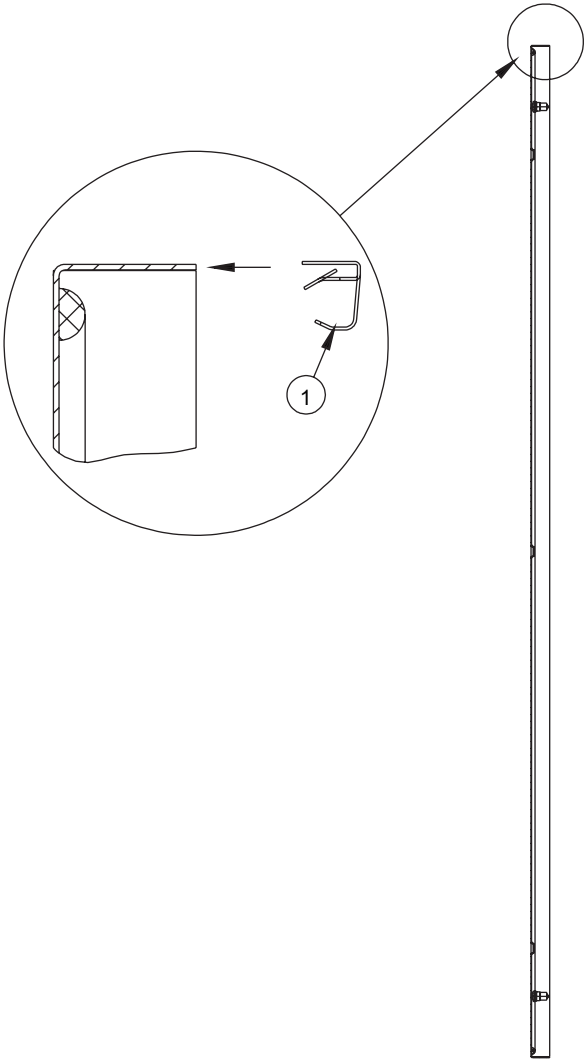



© 2018 Hoffman Enclosures Inc.

© 2018 Hoffman Enclosures Inc.