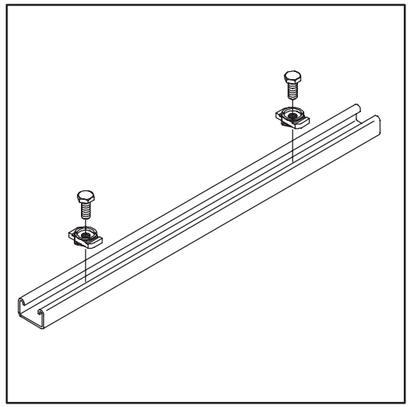

PROLINE®

Transformer Mounting Rail
Transformator–Befestigungsschiene
Rail De Support De Transformateur
Carril De Montaje Del Transformador

1 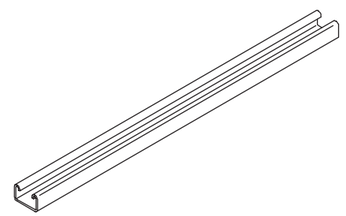 (2x)	
2 (4x)	3 M6–1x16 (4x)
4 M10 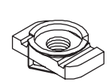 (4x)	5 M10–1.75x25 (4x)
6 M6 (4x)	

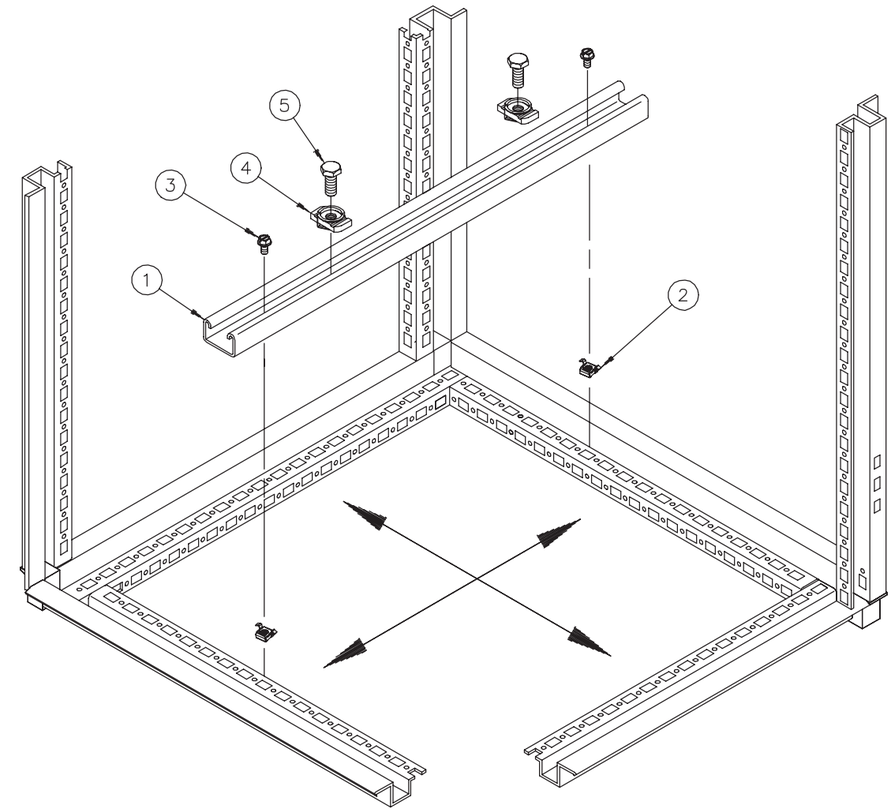

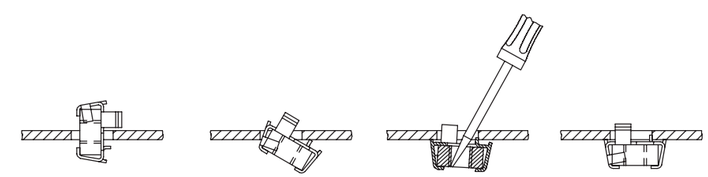

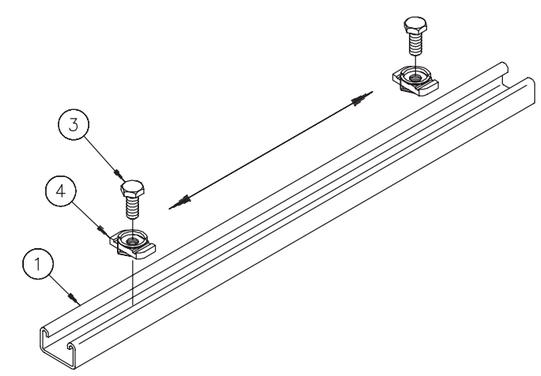

© 2018 Hoffman Enclosures Inc.
PH 763 422 2211 • nVent.com/HOFFMAN
P/N 87749938