SPECTRACOOL
SLIM FIT AIR CONDITIONERS
ALL MODELS

INSTRUCTION MANUAL

Rev. C
© 2024 nVent
P/N 89217666

89217666

TABLE OF CONTENTS

nVent Cooling Sales and Service Contacts 4
Warranty and Return Policy 4
CE Declaration of Conformity 5
Receiving The Air Conditioner 9
Handling and Testing The Air Conditioner 9
PHASE MONITOR (460v Only) 9
How to Read Model Numbers 9
General Safety Information 10
General Technical Information 10
Sequence of Operation 10
Cooling 10
Component Operation 10
Smart Controller (General Alarms) 10
Remote Access Control (Optional) 10
Door Switch 10
Active Condensate Management 10
Mounting 11
Tools Required For Installation: 11
External Mounting 11
Partial Recessed Mounting (Not Applicable to 300W Unit) 11
Electronic Controlling Section 13
Digital Thermostat Controller (optional) 13
Overview 13
Energizing The Controller 13
Controller Status Indication 14
Keypad 14
Main field 14
Icons 14
Displaying And Changing Program Settings 16
To View Or Access The Settings 16
To Change A Parameter Setting 16
Models With °C Controllers 17
Table 1: Heat/Cool Operating Parameters 17
Table 2: Alarm Parameters (°C) 17
Models With °F Controllers 17
Table 3: Heat/Cool Operating Parameters 17
Table 4: Alarm Parameters (°F) 17
Real-Time-Clock Setting 18
View Alarms 18
View The Alarms In The Alarm History Folder 18
To Reset The Alarms In Alarm History Folder 19
To Reset Parameters To Factory Default 19
Displaying Temperature Data On Screen 20
Compressor Restart Time Delay 20
Alarm Input Contact - Door Open/Smoke Detected 20
Alarm Output Contact – All Alarms 20
Primary-Secondary (Ps) Mode 21
Connecting Units Together In Primary/Secondary Mode 21
Figure 2: Primary-secondary network connectivity 21
Lead-Lag (Ll) Mode 23
Connecting Units Together In Lead/Lag Mode 23
Figure 3: Lead-Lag network connectivity 23
Air Conditioner Unit Remote Communication Features 24
Usb Communication 24
Ethernet Communication 24
Using nVent HOFFMAN Pc Interface Tool 25
Usb Communication Mode 25
To View The Controller Data Information From The A/C Unit 25
To Change The Temperature Settings To The Controller 25
To View And Change The Ethernet Card (Rac) Information 25
To Change The Static Network To Dynamic Network Mode 25
Ethernet Communication Mode 26
To Monitor Multiple A/C Units In The Network 26
Alarm Log Accessible With Support Protocol 26
Remote Access Control Pin-Out 27
Technical Information 28
S06 Models 300/500W 28
S06 Schematic 300/500W 28
S06 Wire Diagram 300/500W 29
S06 Dimensional Drawings 30
300W 30
500W 30

© 2024 nVent

S06 Installation Instruction ... 32
S06 300W Cutout Drawing ... 32
Surface Mount ... 32
Full Recess Mount ... 32
S06 500W Cutout Drawing ... 33
Surface Mount ... 33
Partial and Full Recess Mount ... 33
S06 Unit Characteristics ... 34
S06 Components ... 35
S10 Models 1000/1500W ... 36
S10 Schematics ... 36
1000W 115V, 230V ... 36
1000W 460V ... 36
1500W 115V ... 37
1500W 230V ... 37
1500W 460V ... 38
S10 Wire Diagrams ... 39
1000W 115V, 230V ... 39
1000W 460V ... 40
1500W 115V ... 41
1500W 230V ... 42
1500W 460V ... 43
S10 Dimensional Drawing ... 44
1000/1500W ... 44
S10 Installation Instruction ... 45
S10 1000/1500W Cutout Drawing ... 45
Surface Mount ... 45
Partial and Full Recess Mount ... 45
S10 Unit Characteristics (115V, 230V) ... 46
S10 Unit Characteristics (460V) ... 47
S10 Components (1 Phase) ... 48
S10 Components (3 pHASE) ... 49
S16 Models 2000/2500W ... 50
S16 Schematics ... 50
2000W 230V ... 50
2000W 460V ... 50
2500W 230V ... 51
2500W 460V ... 51
4000W 460V ... 52
S16 Wire Diagrams ... 53
2000W 230V ... 53
2000W 460V ... 54
2500W 230V ... 55
2500W 460V ... 56
4000W 460V ... 57
S16 Dimensional Drawing ... 58
2000/2500W ... 58
4000W ... 59
S16 Installation Instruction ... 60
S16 2000/2500W Cutout Drawing ... 60
Surface Mount ... 60
Partial and Full Recess Mount ... 60
S16 4000W Cutout Drawing ... 61
Surface Mount ... 61
Partial Recess Mount ... 61
S16 Unit Characteristics (230V) ... 62
S16 Unit Characteristics (460V) ... 63
S16 Components (230V) ... 64
S16 Components (460V) ... 65
Maintenance ... 66
Compressor ... 66
Inlet Air Filter (Field Installed Option) ... 66
How To Remove, Clean or Install an optional Inlet Air Filter ... 66
Condenser and Evaporator Air Movers ... 66
Maintenance / Inspection Recommendations ... 67
Basic Air Conditioning Trouble Shooting Check List - Remote Access Control Version ... 68
Basic Air Conditioning Trouble Shooting Checklist ... 69
3-Phase Basic Air Conditioning Trouble Shooting Check List - Remote Access Control Version ... 70
3-Phase Symptoms and Possible Causes - Remote Access Control Version ... 71
F-GAS INFORMATION - S06 MODELS ... 72
F-GAS INFORMATION - S10 MODELS ... 72
F-GAS INFORMATION - S16 MODELS ... 72

© 2024 nVent

NVENT COOLING SALES AND SERVICE CONTACTS

EUROPE:	
Deutschland (Germany)	+49 (0) 7082 794 0
France	+33 (0) 3 88 90 64 90
Italia (Italy)	+39 02 932 714-1
Polska (Poland)	+48 22 209 98 37
Россия (Russia)	+7 495 926 18 85
Sverige (Sweden)	+46 (0) 8 683 6100
United Kingdom	+44 (0) 1442 240 471
MIDDLE EAST:	
UAE	+971 4 378 1700
NORTH AMERICA:	
México	+52 555 280 1449
US and Canada	+1 763 421 2240
SOUTH AMERICA:	
Brasil (Brazil)	+55 15 3363 9100
ASIA/SOUTH PACIFIC:	
中国 (China)	+86 400 820 1133
India	+91 80 2845 4640
日本 (Japan)	+81 (0) 45 476 02 81
Singapore	+65 6768 5800

Or visit nVentProtect.com

WARRANTY AND RETURN POLICY

https://hoffman.nVent.com/en/HOFFMAN/warranty-information

© 2024 nVent

HOFFMAN ENCLOSURES, INC.
2100 Hoffman Way
Minneapolis, MN 55303-1745, USA
+1.763.421.2240 main

EU Declaration of Conformity

Issued by
Hoffman Enclosures, Inc.
declare at our sole responsibility, that these devices are designed and constructed according to the Essential Health & Safety requirements of the relevant European directives.

Equipment Description: **S0603X6GXXX, S0605X6GXXX, S1010X6GXXX, S1015X6GXXX, S1620X6GXXX, S1625X6GXXX, S1640X6GXXX**

Product Name: **"SpectraCool SLIM Fit" Control Cabinet Air-Conditioner**

Business Trade Mark/Brand Name: **Hoffman**

Ingress Protection: **IP34 - Ambient Side, IP54 Enclosure Side**

Applicable Directives:

2014/35/EU Low Voltage Directive
Laws for electrical equipment within certain voltage limits

2014/30/EU EMC Directive relating to
Electromagnetic compatibility

Applicable Standards:

EN 60335-1:2012/AC:2014 Household and similar electrical appliances - Safety - Part 1: General requirements

EN 60335-2-40:2003/A13:2012/AC:2013 Household and similar electrical appliances - Safety - Part 2-40: Particular requirements for electrical heat pumps, air-conditioners and dehumidifiers

EN 61000-6-2:2005/AC:2005 Electromagnetic compatibility (EMC) - Part 6-2: Generic standards - Immunity for industrial environments

EN 61000-6-3:2007/A1:2011/AC:2012 Electromagnetic compatibility (EMC) - Part 6-3: Generic standards - Emission standard for residential, commercial and light-industrial environments

EN 60529:1991 Degrees of protection provided by enclosures (IP Code)

EN 60529:1991/AC:1993

EN 55014-2: 1997 Electromagnetic compatibility – Requirements for household appliances, electric tools and similar apparatus – Part 2: Immunity – Product family standard

Authorized by: 2/21/2018

Date

Tom Hurney
Manager, Lab & Certifications

Subject to Change Without Notice

DOC: CE-00154-C

© 2024 nVent

HOFFMAN ENCLOSURES, INC.
2100 Hoffman Way
Minneapolis, MN 55303-1745, USA
+1.763.421.2240 (Zentrale)

EU-Konformitätserklärung

Der Aussteller,
Hoffman Enclosures, Inc.,
erklärt hiermit in alleiniger Verantwortung, dass die nachfolgend beschriebenen Geräte in ihrer Konzeption und Bauart den grundlegenden Sicherheits- und Gesundheitsanforderungen der relevanten europäischen Richtlinien entsprechen.

Produktbeschreibung:	**S0603X6GXXX, S0605X6GXXX, S1010X6GXXX, S1015X6GXXX, S1620X6GXXX, S1625X6GXXX, S1640X6GXXX**
Produktname:	**„SpectraCool SLIM Fit“ Kühlgerät für Steuerschränke**
Handels-/Markenname:	**Hoffman**
Schutzart:	**IP34 – Umgebungsseite, IP54 – Schrankseite**
Relevante Richtlinien:	**2014/35/EU: Niederspannungsrichtlinie Gesetzliche Bestimmungen für elektrische Geräte innerhalb bestimmter Spannungsgrenzen**
	Richtlinie 2014/30/EU über die elektromagnetische Verträglichkeit (EMV-Richtlinie)
Angewandte Normen:	**EN 60335-1:2012/AC:2014 Sicherheit elektrischer Geräte für den Hausgebrauch und ähnliche Zwecke – Teil 1: Allgemeine Anforderungen**
	EN 60335-2-40:2003/A13:2012/AC:2013 Sicherheit elektrischer Geräte für den Hausgebrauch und ähnliche Zwecke – Teil 2–40: Besondere Anforderungen für elektrisch betriebene Wärmepumpen, Kühlgeräte und Raumluft-Entfeuchter
	EN 61000-6-2:2005/AC:2005 Elektromagnetische Verträglichkeit (EMV) – Teil 6-2: Fachgrundnormen – Störfestigkeit für Industriebereiche
	EN 61000-6-3:2007/A1:2011/AC:2012 Elektromagnetische Verträglichkeit (EMV) – Teil 6-3: Fachgrundnormen – Störaussendung für Wohnbereich, Geschäfts- und Gewerbebereiche sowie Kleinbetriebe
	EN 60529:1991 Schutzarten durch Gehäuse (IP-Code)
	EN 60529:1991/AC:1993
	EN 55014-2:1997 Elektromagnetische Verträglichkeit – Anforderungen an Haushaltgeräte, Elektrowerkzeuge und ähnliche Elektrogeräte – Teil 2: Störfestigkeit – Produktfamiliennorm

Genehmigt von: **Tom Hurney**
Manager, Lab & Certifications

21.02.2018
Datum

Änderungen vorbehalten

DOK: CE-00154-C

© 2024 nVent

HOFFMAN ENCLOSURES, INC.
2100 Hoffman Way
Minneapolis, MN 55303-1745, États-Unis
+1.763.421.2240 (ligne principale)

Déclaration de conformité UE

Publiée par
Hoffman Enclosures, Inc.
déclarons, en qualité de fabricant et sous notre entière responsabilité, que ces appareils ont été conçus et fabriqués conformément aux exigences essentielles de santé et de sécurité des directives européennes applicables.

Description de l'équipement : **S0603X6GXXX, S0605X6GXXX, S1010X6GXXX, S1015X6GXXX, S1620X6GXXX, S1625X6GXXX, S1640X6GXXX**

Nom du produit : **Climatiseur pour armoire de commande « SpectraCool SLIM Fit »**

Marque commerciale/Nom de marque : **Hoffman**

Protection contre les contacts accidentels : **IP34 - Côté extérieur, IP54 - Côté armoire**

Directives applicables :

Directive 2014/35/CE relative à la basse tension
Lois relatives au matériel électrique destiné à être employé dans certaines limites de tension

Directive CEM 2014/30/UE relative à la compatibilité électromagnétique

Normes applicables :

EN 60335-1:2012/AC:2014 Appareils électrodomestiques et analogues - Sécurité - Partie 1 : prescriptions générales

EN 60335-2-40:2003/A13:2012/AC:2013 Appareils électrodomestiques et analogues - Sécurité - Partie 2-40 : règles particulières pour les pompes à chaleur électriques, les climatiseurs et les déshumidificateurs

EN 61000-6-2:2005/AC:2005 Compatibilité électromagnétique (CEM) - Partie 6-2 : normes génériques - Immunité pour les environnements industriels

EN 61000-6-3:2007/A1:2011/AC:2012 Compatibilité électromagnétique (CEM) - Partie 6-3 : normes génériques - Norme sur l'émission pour les environnements résidentiels, commerciaux et de l'industrie légère

EN 60529:1991 Degrés de protection procurés par les enveloppes (indice de protection IP)

EN 60529:1991/AC:1993

EN 55014-2: 1997 Compatibilité électromagnétique - Exigences pour les appareils électrodomestiques, outillages électriques et appareils analogues - Partie 2 : immunité - Norme de famille de produits

Validé par : 21/02/2018

Date

Tom Hurney
Directeur Laboratoire et certifications

Document pouvant être modifié sans préavis

DOC : CE-00154-C

© 2024 nVent

HOFFMAN ENCLOSURES, INC.
2100 Hoffman Way
Minneapolis, MN 55303-1745, Stati Uniti
+1.763.421.2240

Dichiarazione di conformità UE

Emessa da
Hoffman Enclosures, Inc.
dichiara sotto la propria esclusiva responsabilità che questi dispositivi sono progettati e costruiti in conformità ai requisiti di sicurezza e di tutela della salute fondamentali delle direttive europee pertinenti.

Descrizione dei dispositivi: **S0603X6GXXX, S0605X6GXXX, S1010X6GXXX, S1015X6GXXX, S1620X6GXXX, S1625X6GXXX, S1640X6GXXX**

Nome del prodotto: **Condizionatore d'aria per armadi di controllo "SpectraCool SLIM Fit"**

Marchio commerciale/nome del marchio: **Hoffman**

Protezione in ingresso: **IP34 - lato ambiente, IP54 lato contenitore**

Direttive applicabili:

Direttiva Bassa Tensione 2014/35/UE
Disposizioni di legge per apparecchiature elettriche entro specifici limiti di tensione

Direttiva EMC 2014/30/UE relativa alla compatibilità elettromagnetica

Standard applicabili:

EN 60335-1:2012/AC:2014 Sicurezza degli apparecchi elettrici d'uso domestico e similare - Parte 1: Requisiti generali

EN 60335-2-40:2003/A13:2012/AC:2013 Sicurezza degli apparecchi elettrici d'uso domestico e similare - Parte 2-40: Requisiti particolari per le pompe di calore elettriche, i condizionatori d'aria e i deumidificatori

EN 61000-6-2:2005/AC:2005 Compatibilità elettromagnetica (EMC) - Parte 6-2: Norme generiche - Immunità per gli ambienti industriali

EN 61000-6-3:2007/A1:2011/AC:2012 Compatibilità elettromagnetica (EMC) - Parte 6-3: Norme generiche Emissione per gli ambienti residenziali, commerciali e dell'industria leggera

EN 60529:1991 Gradi di protezione degli involucri(codice IP)

EN 60529:1991/AC:1993

EN 55014-2: 1997 Compatibilità elettromagnetica – Requisiti per gli elettrodomestici, gli utensili elettrici e gli apparecchi similari – Parte 2: Immunità – Norma di famiglia di prodotti

Autorizzato da:

21/02/2018
Data

Tom Hurney
Manager laboratorio e certificazioni

Soggetto a modifiche senza preavviso

DOC: CE-00154-C

© 2024 nVent

RECEIVING THE AIR CONDITIONER

Inspect the air conditioner. Check for concealed damage that may have occurred during shipment. Look for dents, scratches, loose assemblies, evidence of oil, etc. Damage evident upon receipt should be noted on the freight bill. Damage should be brought to the attention of the delivering carrier -- NOT to nVent Equipment Protection -- within 15 days of delivery. Save the carton and packing material and request an inspection. Then file a claim with the delivering carrier.

nVent Equipment Protection cannot accept responsibility for freight damages; however, we will assist you in any way possible.

HANDLING AND TESTING THE AIR CONDITIONER

If the air conditioner has been in a horizontal position, be certain it is placed in an upright, vertical or mounting position for a minimum of five (5) minutes before operating.

⚠ CAUTION

Do not attempt to operate the air conditioner while it is horizontal or on its side, back or front. The refrigeration compressor is filled with lubricating oil. This will cause permanent damage to the air conditioner and also voids the warranty.

TEST FOR FUNCTIONALITY BEFORE MOUNTING THE AIR CONDITIONER TO THE ENCLOSURE.

Refer to the nameplate for proper electrical current requirements, and then wire the unit to a properly grounded power supply using copper conductors only. Power supply wiring should be restrained after field installation to ensure no contact with internal fan. Minimum circuit ampacity should be at least 125% of the amperage shown on the unit nameplate. No other equipment should be connected to this circuit to prevent overloading.

Electrical circuit should be fused with slow blow or heating, air conditioning and refrigeration (HACR) rated circuit breaker. Use a higher ampere rated circuit breaker or time-delay fuse that is closest to the nominal ampere rating of the air conditioner, or sum of the individual component ampere ratings, to protect system electrical circuits from short circuit or overload.

PHASE MONITOR (460V ONLY)

Note Location: Rear access panel, D-shaped sight port.
Reference S10 Dimensional Drawing on page 43; S16 Dimensional Drawing, 2000/2500W on page 58; S16 Dimensional Drawing, 4000W on page 59

This product is equipped with Phase/Voltage Protection. Please verify correct phasing and voltage before operating. Note the fans may still operate if phasing is incorrect, but the compressor will not, so the unit will not cool. Illuminated light on Phase Monitor indicates phase is correct.

If the light is not illuminated, disconnect power from the unit and swap any two power leads at the terminal block. This should correct the phasing. The light should now illuminate when power is reapplied.

Immediately after applying power, the evaporator blower (enclosure air) should start running. Operate the air conditioner with the compressor running for five (5) to ten (10) minutes. You will need to set the cooling controller setpoint below the ambient temperature to operate the compressor.

Condenser air temperatures should be warmer than normal room temperatures within a few minutes after the condenser impellers start.

See Sequence of Operation on page 10 for specifics on how the unit operates when powered up.

HOW TO READ MODEL NUMBERS

S10	15	2	6	G031
1	2	3	4	5

1. Identifies the type/family of air conditioner and the approximate height (i.e. S10 = Slim Fit family about 1000mm high (10x100).
2. This is the air conditioner's listed capacity in Watts at rated conditions. (i.e. 15=1500W (15x100) at 35/35 C)
3. 1 = 115 Volt, 2 = 230 Volt, 4 = 400/460 Volt.
4. 5 = 50 Hz only, 6 = 50/60 Hz or 60 Hz only.
5. Unique set of numbers for each air conditioner which identifies the accessories on a model.

© 2024 nVent

GENERAL SAFETY INFORMATION

Please observe the following general safety instructions when assembling and operating the unit:

- Assembly,installation and servicing may only be performed by properly trained specialists.
- When transporting the enclosure with the cooling unit externally mounted, always use an additional shipping brace to support the cooling unit.

GENERAL TECHNICAL INFORMATION

The evaporator outlet sensor monitors the enclosure return air temperature to prevent ice buildup on the evaporator coil. If the air temperature drops below –1°C, the compressor and condenser air mover(s) shut off. They turn back on when the temperature rises above 15°C.

The compressor and the air movers are equipped with overload protection to guard against excess current and temperatures.

SEQUENCE OF OPERATION

The air conditioner comes standard with smart controller. During cooling modes, the evaporator fan will be running.

COOLING

When the enclosure temperature is above the cooling setpoint, power is applied to the compressor and condenser air mover(s).

Operating the air conditioner below the minimum ambient temperature or above the maximum ambient temperatures indicated on the nameplate voids all warranties. DO NOT adjust the setpoint to a temperature lower than 20°C. Doing so can increase the likelihood of frost buildup on the evaporator coil.

The moisture that the sealed enclosure air can contain is limited. If moisture flows from the drain tube continuously this can only mean that ambient air is entering the enclosure. Be aware that frequent opening of the enclosure's door admits humid air that the air conditioner must then dehumidify.

COMPONENT OPERATION

NOTE: Do not reduce the time delay setting on the controller to less than 120 seconds. This may cause the compressor to cycle too rapidly, shortening the life of the compressor.

SMART CONTROLLER (GENERAL ALARMS)

See nVent Cooling Sales and Service Contacts on page 4

REMOTE ACCESS CONTROL (OPTIONAL)

See Electronic Controlling Section on page 13–24

DOOR SWITCH

If a door switch is available, connect it to the terminals marked WHT/DS1 and WHT/DS2. The switch circuit should be open when the door is closed, and closed when the door is open. Several door switches may be connected in parallel and operated on one cooling unit. The door switch only supports a floating connection with no external voltages.

ACTIVE CONDENSATE MANAGEMENT

At low temperatures and high humidity levels inside the enclosure, condensation may form on the evaporator coil.

Slim Fit air conditioners continuously evaporate the water that may be in the drain pan due to condensation from the evaporator coil into the external air stream. Excess condensate is routed downwards out of the air conditioner via a barbed fitting at the bottom of the condenser side of the unit. A 10 mm (.40) inside diameter tube can be attached to the fitting and routed to a nearby drain.

© 2024 nVent

MOUNTING

TOOLS REQUIRED FOR INSTALLATION:

- #2 Phillips screwdriver
- 6.5 mm slotted screwdriver
- 13 mm wrench or socket

EXTERNAL MOUNTING

1. Using the mounting gasket kit provided with the unit, install gasket to the air conditioner, see Figure 1.
2. Screw the supplied grub screws into the blind nuts on the rear of the unit, see Figure 2.
3. Secure the unit to the enclosure using the supplied washers and nuts. Use caution to avoid damaging the gasket while positioning the unit.

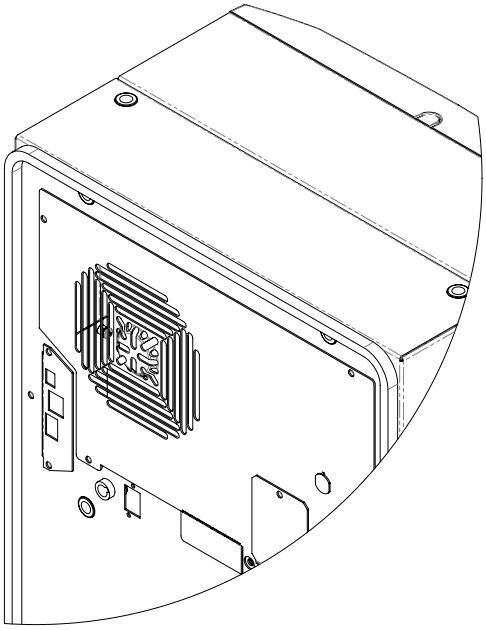

Figure 1

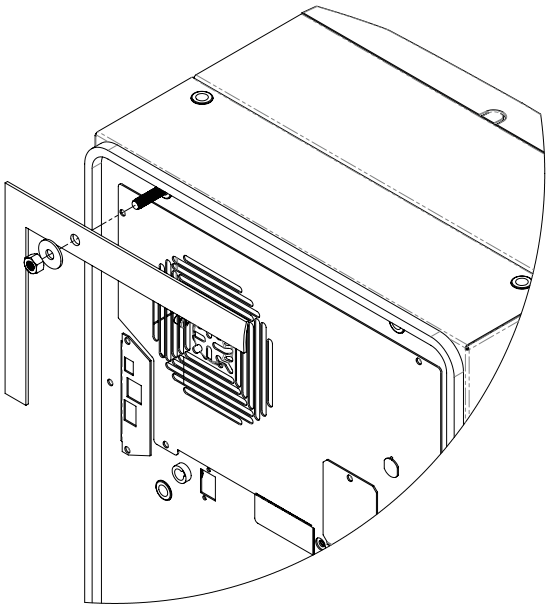

Figure 2

PARTIAL RECESSED MOUNTING (NOT APPLICABLE TO 300W UNIT)

1. Carefully remove the louvered grille, and where applicable, remove the center panel from the enclosure by pulling forwards. See Figure 3 on page 12.
2. Carefully disconnect the connectors from the rear of the smart controller.
3. Remove the two front screws.
4. Remove the four nuts on the front panel and pull the panel assembly forward approximately 5 cm. See Figure 4 on page 12.
5. Disconnect the fan electrical connection.
6. Remove the front panel.
7. Remove the four standoffs, leaving the grub screws in place.
8. Push the rear enclosure half into the mounting cutout and secure it with the four standoffs. See Figure 5 on page 12.
9. Push the smart controller cables through the rectangular hole in the front panel.
10. Reconnect the fan electrical connector.
11. Mount the front panel using the nuts removed in step 4.
12. Install two front screws.
13. Carefully reconnect the smart controller connectors .
14. Push the louvered grille and, where applicable, the center panel, onto the front panel. See Figure 6 on page 12.

© 2024 nVent

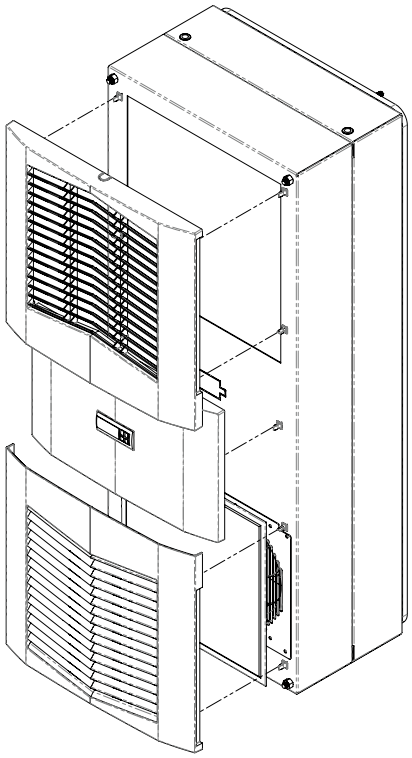

Figure 3

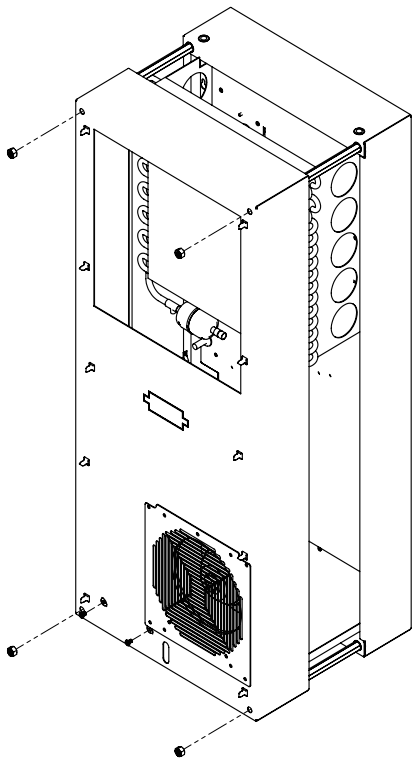

Figure 4

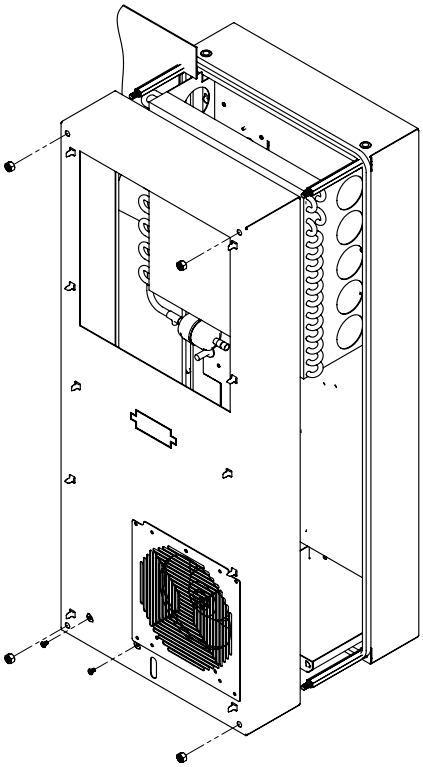

Figure 5

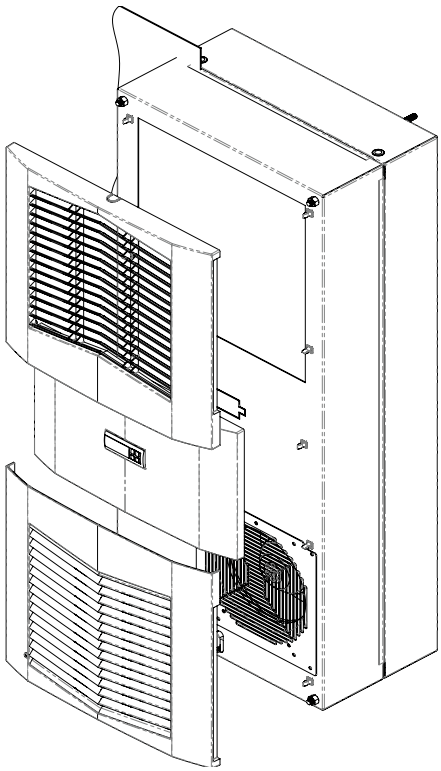

Figure 6

© 2024 nVent

ELECTRONIC CONTROLLING SECTION

DIGITAL THERMOSTAT CONTROLLER (OPTIONAL)

OVERVIEW

The digital thermostat (controller) is a parametric controller for the complete management of air conditioners. All settings are pre-programmed at the factory. Cooling/heating setpoint, cooling/heating differential and high/low temperature setpoint are designed to be adjustable by the operator. All alarms are outputted through the alarm relay. In addition, if nVent HOFFMAN network card (Remote Access Control (RAC) Module) is used the parameters that state above and alarms are accessible remotely through Ethernet connection utilizing SNMP, Modbus TCP, EtherNet/IP, and Profinet protocol . A USB connection from the network card is also provided with accessibility to the digital thermostat controller utilizing Modbus RTU and RS-845 serial bus. In addition, the USB connection is also used to read the network information from the nVent HOFFMAN network card and temperature setpoints and alarm from the controller. Note that nVent HOFFMAN network card (RAC module) is acting as a gateway to the digital thermostat where temperature setpoints and alarm can be viewed and/or changed remotely.

> **NOTE: HOFFMAN NETWORK CARD (RAC MODULE) IS OPTIONAL ACCESSORY, THEREFORE, SOME OF THE AIR CONDITIONERS SHIP WITHOUT THE NETWORK CARD BUT IT IS UPGRADEABLE UPON REQUEST**

ENERGIZING THE CONTROLLER

The digital controller is wired and programmed at the factory to operate when power is applied to the air conditioner. In normal condition, the evap fan starts operating after the completion of the self-evaluation which is less than 30 seconds and fan icon should be illuminated along with the inlet and outlet temperature data (if an option outlet temperature sensor is installed).

© 2024 nVent

CONTROLLER STATUS INDICATION

The display has numerous symbols to indicate the various controller functions such as cooling, heating, alarming, evaporator fan, and heating. Indicators (icons) are steady illuminated on screen when active.

Figure 1: Display

KEYPAD

SYMBOL	COLOR	ICON INDICATION	ICON STATUS
⚠	Red	Alarm - active when alarm is detected	Flashing when alarm is detected
◉	White	Keypad Select – access to passcode , hold 5 sec to turn unit ON/OFF, parameter menu, parameter setting, write or save to EEPROM, and hold for 3sec to return to main screen	ON
↑	White	Keypad Up – navigate to previous parameter and increasing parameter variable	ON only when reviewing parameters
↓	White	Keypad Down – navigate to next parameter and decreasing parameter variable, all inputs, unit status.	ON

MAIN FIELD

SYMBOL	COLOR	ICON INDICATION	ICON STATUS
°C	White	When operating temperature in degrees Celsius	ON
°F	White	When operating temperature in degrees of Fahrenheit	ON
Main Field Line 1	White	Display inlet temperature	ON
Main Field Line 2	Orange	Display outlet temperature in standalone mode if outlet sensor is present Displays device ID for primary-secondary mode up to 10 units, 1:10 … 10:10 or lead-lag mode up to 2 units, 1:2… 2:2	ON

ICONS

SYMBOL	COLOR	ICON INDICATION	ICON STATUS
	White	Compressor Running	Flashing while waiting for compressor to turn ON Steady ON while compressor is running
	White	Evaporator Running	ON
	White	Electric heater ON	ON
	White	Primary and/or lead controller	ON
	White	Freeze control	Compressor and Condenser fan OFF while illuminated
	White	Power ON	ON

© 2024 nVent

Home Screen
Inlet Temp
Outlet Temp
Evap fan icon
Compressor icon
Heater icon
Unit of measure
Power ON icon
Program
Read ID & Sensor
S1 Inlet Sensor
S2 Outlet Sensor
ESC Escape

Passcode Screen	
PSd	0002 or 0022
ESC	Escape

Passcode 0002	
ALrF	Alarm Folder
AHiF	Alarm History Folder
PArF	Parameter Folder
rtCL	Real Time Clock Folder
rStF	Reset
UnF	Unit of Measure (°C or °F)
FrF	Firmware Revision Folder
LOG Out	Log Out of program mode

ArOP	Alarm Relay Output Setting
dO	Door Open Alarm Setting
Ht	High temperature alarm setpoint
Lt	Low temperature alarm setpoint
rH	Relative Humidity alarm setpoint
ESC	Escape

CSt	Cooling Setpoint
Cd	Cooling Differential
Cd2	Cooling Differential 2
HSt	Heating Setpoint
Hd	Heating Differential
H25	Internal Buzzer Configuration
ESC	Escape

t01	Unit of hour
t02	Unit of minute
t03	Unit of year
t04	Unit of month
t05	Unit of day
SET	Save
ESC	Escape

rSAL	Reset or Clear alarms
rSPA	Reset parameters to default
ESC	Escape

H13	°C = 0; °F = 1
ESC	Escape

Fr	Firmware revision
ESC	Escape

© 2024 nVent

DISPLAYING AND CHANGING PROGRAM SETTINGS

TO VIEW OR ACCESS THE SETTINGS

To access folder menus.

1. Press ◉ button to display passcode screen, the screen displays **PSd** on line 1 and **0000** on line 2.
2. Press ◉ button to access to passcode , the first digit of **0000** is flashing and press 3 more times until the last digit of **0000** flashes.
3. Press ↑ arrow two times to change the 0 to 2. Press ◉ for access to folder menus.

NOTE: To exit the security level to the main screen wait one minute with no action or Press arrow until LOG Out message displays, then press ◉ button.

TO CHANGE A PARAMETER SETTING

1. Once in the folder menu navigate to the desired setting to be changed using the ↓ arrow to scroll and ◉ button to access a menu or parameter.
2. To change a parameter Press ◉ button and parameter value will begin to flash.
3. Press ↑ / ↓ arrow to the desire value.
4. Press ◉ button to save the setting and the screen will revert to the parameter mnemonic.

NOTE: IF ◉ BUTTON IS NOT PRESSED, THE NEW SETPOINT IS NOT SAVED.

To exit the parameter settings to the main screen wait one minute with no action or

Press ↑ arrow few times until **ESC** displays, then press button to return to **UoF** screen. From the **UoF** screen Press ↓ arrow few times until **LOG Out** message displays, then press ◉ button to return to the main screen.

Selecting ESC returns to folder menu
Selecting LOG out returns to main screen

© 2024 nVent

MODELS WITH °C CONTROLLERS

TABLE 1: HEAT/COOL OPERATING PARAMETERS

Mnemonic Parameter	Description	Default Value	Range
CSt (1)	Cooling setpoint	35 C	20 C to 55 C
Cd (Cd1) (1)	Cooling differential	5 C	-
Cd2 (2)	Cooling differential 2	8 C	-

NOTES: **(1) Compressor or cooling turns ON at CSt and OFF at CSt - Cd**
(2) Cooling differential 2 is only applied to lead-lag application

TABLE 2: ALARM PARAMETERS (°C)

Mnemonic Para	Description	Default value
Ht	High temperature alarm setpoint	55 C
Lt	Low temperature alarm setpoint	14 C
dO (1)	Alarm input contact - Door open/smoke detected	NO
ArOP (2)	Alarm output contact - all alarms	NO

NOTES: **(1) The Alarm input contact - Door open/smoke detected is configurable**
(2) The alarm relay output logic is configurable

MODELS WITH °F CONTROLLERS

TABLE 3: HEAT/COOL OPERATING PARAMETERS

Mnemonic Parameter	Description	Default Value	Range
CSt (1)	Cooling setpoint	80 F	72 F to 120 F
Cd (Cd1) (1)	Cooling differential	7 F	2 F to 25 F
Cd2 (2)	Cooling differential 2	15 F	

NOTES: **(1) Compressor or cooling turns ON at CSt + Cd and OFF at CSt**
(2) Cooling differential 2 is only applied to lead-lag application

TABLE 4: ALARM PARAMETERS (°F)

Mnemonic Para	Description	Default value
Ht	High temperature alarm setpoint	125 F
Lt	Low temperature alarm setpoint	40 F
dO (1)	Alarm input contact - Door open/smoke detected	NO
ArOP (2)	Alarm output contact - all alarms	NO

NOTES: **(1) The Alarm input contact - Door open/smoke detected is configurable**
(2) The alarm relay output logic is configurable

© 2024 nVent

REAL-TIME-CLOCK SETTING

This controller is equipped with a real time clock for logging the time and date of alarm activities. There are five parameters designating to the minute, hour, year, month of the year, and day of the month as illustrated in below table.

Mnemonic Par	Description
t01	Unit of hour (0 - 23)
t02	Unit of minute
t03	Unit of year
t04	Unit of month
t05	Unit of day
SEt	Save

VIEW ALARMS

Alarms may be viewed when the alerting icon ⚠ is flashing.

1. On the main screen, press the alerting icon ⚠ button
2. The screen displays the most recent or newest alarm where the alarm code display on line 1 and the alerting icon ⚠ is now in steady
3. Press ↑ arrow to view next alarm if there are more than one
4. Press ↓ arrow to display **ESC**, then press ◉ button to return to the main screen

VIEW THE ALARMS IN THE ALARM HISTORY FOLDER

1. Follow instructions above to enter the passcode and open the alarm history folder **(AHiF)**.
2. Press ◉ button to access to the alarm history.
3. Press ↓ arrow to display the mnemonic alarm on line 1 and time, month, and day display on line 2. For example, low temp alarm (Lt) displays on line 1 and 09:24 and 0706 display on line 2 in sequence. Note that the time, and date recorded in the alarm history is based on the local real-time-clock if configured after installation.
4. Press ↓ arrow to view next alarm. The controller is able to retain up to 25 events
5. Press ↑ ↓ arrow until the screen displays ESC, then press button to return to the main screen or if no action for longer than 60 seconds the screen will be automatically revert to the main screen.

NOTE: If no alarms are present then only ESC will be displayed in the folder.

© 2024 nVent

There are seven possible alarms (non-latching) detectable by the controller and are indicated on the controller display. All alarms are accessible locally. If a nVent HOFFMAN network card (RAC module) is used, alarms are also accessible remotely through the Ethernet and USB connection.

Mnemonic Alarm	Description	Cause	Result	Alarm Relay Output
dO	Door open alarm	Enclosure door opens or not properly close	Compressor and evap fan turn OFF in duration of alarm	Closed
S1F	Inlet temperature sensor fault	Inlet temp probe failed	No effect on function, controller continue operating as normal using outlet sensor with setpoint of 10 C	Closed
S2F	Outlet temperature sensor fault	Outlet temp probe failed	No effect on function but loss freeze protection	Closed
LA	Malfunction alarm	MALF high pressure switch opens	No effect on function	Closed
Ht	High temp warning	Enclosure air exceeds high temp alarm setpoint	No effect on function	Closed
Lt	Low temp warning	Enclosure air drops below low temp alarm setpoint	No effect on function	-
FA	Frost alarm	Evaporator coil freezes	Compressor and condenser fan turns OFF at or below -1 C for the duration of alarm. Alarm clears when the outlet temperature sensor reaches 15 C	Closed

TO RESET THE ALARMS IN ALARM HISTORY FOLDER

The controller is designed with ability to reset or clear the alarm history

1. Follow instructions above to enter the passcode and open the reset folder **(rStF)**.
2. The screen displays rSAL on line 2 and nO on line 1, press ◉ button the **nO** is flashing
3. Press ↑ arrow to change **nO** to **YeS**, then press ◉ button reset the alarms. The screen flashes once and returns to **rSAL** with nO one line 2
4. Press ↓ arrow to navigate to **ESC**, then press ◉ to returns to **rStF** screen.
5. Press ↓ arrow to navigate to **LOG Out**, then press ◉ button to return to the main screen or if no action for longer than 60 seconds the screen will be automatically reverted to the main screen.

TO RESET PARAMETERS TO FACTORY DEFAULT

This option is ONLY applied if the operator wants to reset all control parameters back to factory default.

1. Follow instructions above to enter the passcode and open the reset folder **(rStF)**.
2. The screen displays **rSAL**, press ↓ arrow to navigate to **rSPA** and then press ◉ button
3. The screen displays **rSPA** one line 1 and the word **nO** on line 2 in steady state, press ◉ button and then the word nO is flashing and ready to change
4. Press ↑ arrow to change **nO** to **YES**. Press ◉ button the screen displays **PSd** with **0000** on line 2
5. Press ◉ button to enter to passcode. Press ◉ button few times until the last digit of **000<u>0</u>** flashing
6. Press ↑ arrow to change **0** to **2**, press ◉ button to authorize the reset of the parameters
7. The screen returns to **rSPA** screen in steady state.
8. Press ↓ arrow to navigate to **ESC**, then press ◉ to returns to **rStF** screen.
9. Press ↓ arrow to navigate to **LOG Out**, then press ◉ button to return to the main screen or if no action for longer than 60 seconds the screen will be automatically reverted to the main screen.

© 2024 nVent

DISPLAYING TEMPERATURE DATA ON SCREEN

There are two temperature probes in the air conditioner where one is reading the enclosure air temperature incoming to the air conditioner and other is reading the cooled air leaving the air conditioner and entering the enclosure. Both temperature data are displayed on the screen where line 1 is the reading of the inlet temperature and line 2 is the reading of the outlet temperature.

COMPRESSOR RESTART TIME DELAY

A factory set 3 minute (180 seconds) restart delay exists to reduce residual back pressure before allowing the compressor to restart. The compressor will stay off for the entire restart duration after the compressor is disabled. A flashing compressor icon on the display indicating that the unit is in a compressor restart delay mode while calling for cooling or waiting for compressor to turn ON.

ALARM INPUT CONTACT - DOOR OPEN/SMOKE DETECTED

The digital controller can accept a dry contact/switch input via the two 18 AWG white wires located at the back of the air conditioner. This input is associated with the controller display alarm mnemonic dO (door open).
Note: Do NOT apply power to this dry contact input.

Para	Description	Configuration
H05	Door Open and/or smoke detected	1 = normally open (NO) – factory default 2 = normally closed (NC)

ALARM OUTPUT CONTACT – ALL ALARMS

The digital controller has a normally open dry contact alarm output with a resistive load rating of 250VAC @ 5 amps max. The two yellow 18 AWG wires located at the back of the air conditioner provide a connection to this output. **Note: Do not apply power to this normally open dry contact (two yellow 18 AWG wire).** This alarm relay output is configurable and provides user with the ability to change the configuration to support their external device. Parameter C21 controls the alarm relay output logic and can be accessed through security code “0022” in the **PArF** folder.

Para	Description	Configuration
C21	Alarm relay output logic	0 = normally open (NO) – factory default 1 = normally closed (NC)

© 2024 nVent

PRIMARY-SECONDARY (PS) MODE

Note: During normal operation, in both the primary-secondary (PS) and lead-lag (LL) operating modes, line 2 displays the device ID, not the outlet temperature. The outlet temperature can be viewed on line 1 by pressing ↓ arrow.

Primary-secondary (PS) mode shares the same hardware and source code as standalone mode, but offers more functionality and features. The controller ships from the factory in Standalone Mode. PS mode is configured manually in the field after the installation. This option allows the user to operate the air conditioner in a group network with up to 10 units. To support PS mode, three parameters, **H01**, **H02**, and **H03** need to be configured. **H01** specifies the operating mode, **H02** specifies the device ID, and **H03** specifies the total number of the units in the group network.

Before configuring to operate in PS mode, the user should understand the functionality of the PS mode.

1) In the PS mode, all units operate off the cooling/heating setpoint and differential of the primary unit. The system prevents setpoint changes from secondary units.
2) The primary unit monitors the enclosure temperatures of all the units and manages the ON/OFF status of cooling and heating based on the the unit reporting the highest temperature.
3) When cooling is initiated the primary unit energizes first. Secondary units are energized sequentially at 10 second intervals. When heating is initiated all units turn on heat together. When cooling or heating is satisfied all units turn off together.
4) If the number of units communicating on the network doesn't match the value in **H03** then the primary unit will display alarm LC, and the secondary units will display alarm LC1 until the communication re-established.
5) Any unit that loses communication with the primary unit will enter standalone mode and continue operating based on its own temperature probe until communication is re-established.
6) All temperature setpoints and alarms can be viewed remotely if one of the ACUs is equiped with nVent HOFFMAN network card (RAC module).
7) Best recommendation is to configure the ACU that has nVent HOFFMAN network card to be the primary one

CONNECTING UNITS TOGETHER IN PRIMARY/SECONDARY MODE

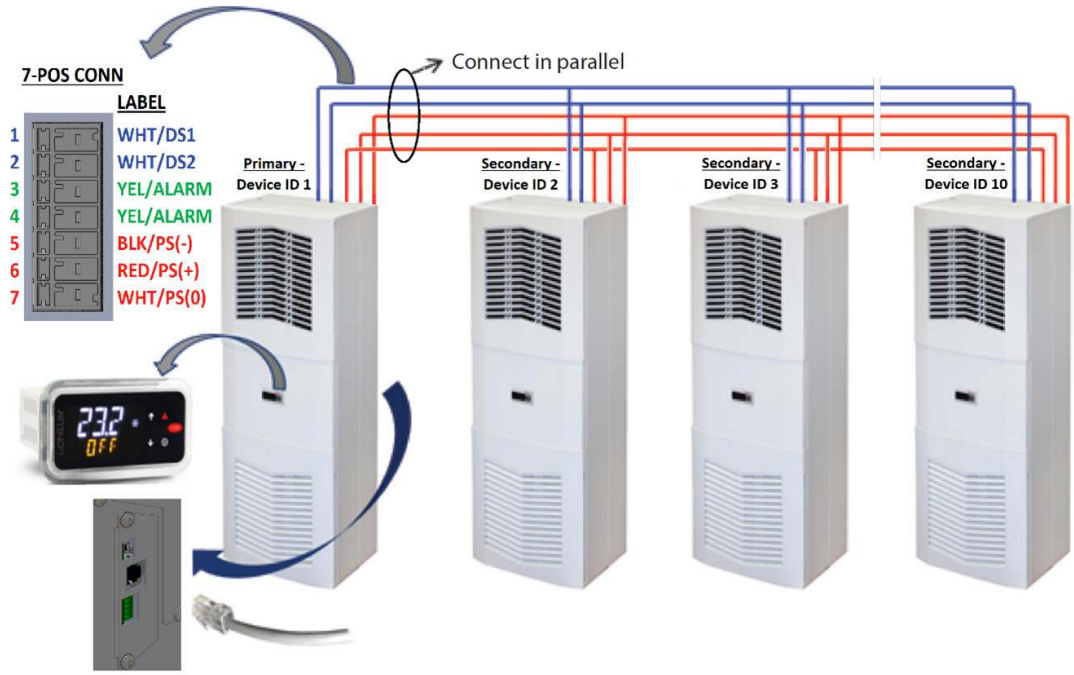

Figure 2: Primary-secondary network connectivity

© 2024 nVent

To configure the controller from single mode to PS mode, simply follow below procedures

1. Before proceeding the PS mode configuration for each controller, make sure that the communication cable is connected from one ACU to another using a shielded cable with the shield grounded.
2. Press ◉ button to display passcode screen, the screen displays **PSd** on line 1 and **0000** on line 2.
3. Press ◉ button to access to passcode , the first digit of **0000** is flashing and press 2 more times until the third digit **0000** flashes. Press ↑ arrow two times to change **0** to **2**, then press button to move to the last digit **0020**
4. Press ↑ arrow two times to change the 0 to 2.
5. Press ◉ button to access to folder menu and then, the screen displays **ALrF**
6. Press ↓ arrow to navigate to **PArF**, then press ◉ button to access to parameter menu
7. The screen displays **C**, press ↓ arrow to navigate to parameter **H** and then, press ◉ button to access to parameter **H** menu

Parameter	Description	Available Range	PS Settings	Default
H01	Mode	SA (stand alone) PS (primary-secondary) LL (lead-lag)	PS (primary-secondary)	SA
H02	Device ID	1 up to 10	1 up to **H03**	1
H03	Total number of the units in the group network	1 up to 10	2 up to 10	1

8. Set parameter **H01** to **PS** (primary-secondary).

   Note that after **H01** = **PS**, the snowflake icon is illuminated and line 2 changes its display information from outlet temperature to device ID, for example, line 2 displays 01:02 where 01 indicates controller #1 and 02 indicates the total number of the controllers in a group network. Keep in mind that the snowflake icon only illuminates on primary controller.
9. Set parameter **H02** (device ID) to 1 to 10. This device ID will be different for each controller that is connected. The controller set to 1 will be the primary controller. Use numbers sequentially and don't skip using a number.
10. Set parameter **H03** (total number of controllers connected) to 1 to 10.

© 2024 nVent

LEAD-LAG (LL) MODE

Lead-lag (LL) mode shares the same hardware and source code as standalone mode, but offers more functionality and features. The controller ships from the factory in Standalone Mode. LL mode is configured manually in the field after the installation. This option allows the user to operate two air conditioners in a staged cooling configuration. The controller will alternate which air conditioner is the first stage. To support LL mode, four parameters, **H01**, **H02**, **H03**, and **H14** need to be configured. **H01** specifies the operating mode, **H02** specifies the device ID, **H03** specifies the total number of the units in the group network, and **H14** is the LL strategy selection.

The two controllers is communicated through fieldbus interface as illustrated in Figure 3. In the lead-lag mode the controller supports

- Lead-lag staged cooling uses two cooling differential temperature settings Cd1 and Cd2. The lead air conditioner will begin cooling at SP+Cd1 and the lag air conditioner will begin cooling at SP+Cd1+Cd2. Cooling will stop when the temperature drops to SP.
- The two air conditioners will take turns being the lead and lag. Alternating can be done in time based or every cooling cycle and is configured with **H14**.

CONNECTING UNITS TOGETHER IN LEAD/LAG MODE

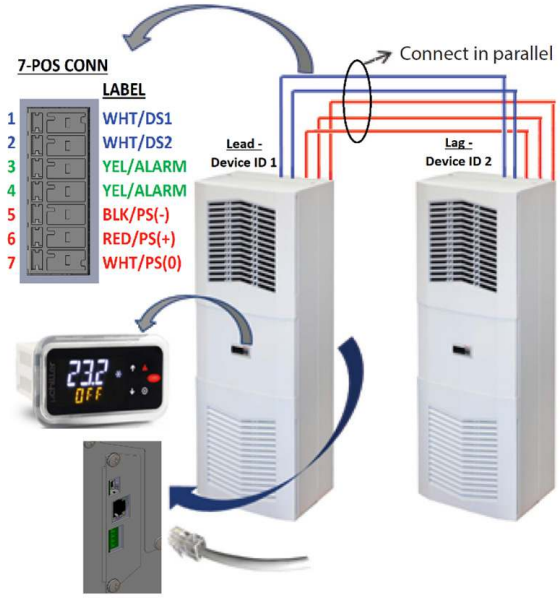

Figure 3: Lead-Lag network connectivity

To configure the controller from single mode to LL mode, simply follow below procedures. Perform this configuration for both air conditioners.

1. Before proceeding the LL mode configuration for each controller, make sure that the communication cable is connected from one ACU to another using a shielded cable with the shield grounded.
2. Press ◉ button to display passcode screen, the screen displays **PSd** on line 1 and **0000** on line 2.
3. Press ◉ button to access to passcode , the first digit of **0000** is flashing and press 2 more times until the third digit **0000** flashes.
   Press ↑ arrow two times to change **0** to **2**, then press ◉ button to move to the last digit **0020**
4. Press ↑ arrow two times to change the 0 to 2.
5. Press ◉ button to access to folder menu and then, the screen displays **ALrF**
6. Press ↓ arrow to navigate to **PArF**, then press ◉ button to access to parameter menu
7. The screen displays C, press ↓ arrow to navigate to parameter H and then, press ◉ button to access to parameter **H** menu

© 2024 nVent

Parameter	Description	Available Range	LL Settings	Default
H01	Mode	SA (stand alone) PS (primary-secondary) LL (lead-lag)	LL (lead-lag)	SA
H02	Device ID	1 up to 10	1 or 2	1
H03	Total number of the units in the group network	1 up to 10	2	1
H14	LL strategy selection	0-250	0 (Alternate each cycle) 1-250 (Alternate hours)	0

8. Set parameter **H01** to LL (lead-lag).
9. Set parameter **H02** (device ID) to 1 for one unit and 2 for the other unit.
10. Set parameter **H03** (total number of controllers connected) to 2.
11. Set parameter **H14** (LL strategy selection) to 0 to 250. This is the run time in hours before ACU1 and ACU2 will alternate being the lead unit. When set to zero ACU1 and ACU2 will automatically alternate every cycle.

AIR CONDITIONER UNIT REMOTE COMMUNICATION FEATURES

Air conditioners that include the optional nVent HOFFMAN network card (RAC module) have remote communication capabilities utilizing SNMP, Modbus TCP, EtherNet/IP, Profinet Protocol via Ethernet connection, and Modbus RTU protocol via USB connection. nVent provides Windows interface application software that is available to download free from nVent support link: https://go.nVent.com/remote-access-control-support-center.

The Windows interface application software supports both Ethernet and USB communication.

USB COMMUNICATION

This communication mode allows direct connection from a laptop (or PC) to the air conditioning unit using a Mini-b USB cable. As stated above, Modbus RTU is used to communicate between the two devices via USB connection.

ETHERNET COMMUNICATION

This communication mode allows remote connection to the air conditioning unit utilizing SNMP, Modbus TCP, EtherNet/IP, and Profinet protocol. Customers that use their own software can download an MIB file for SNMP, EDS or EtherNet/IP Object file for EtherNet/IP, Coil Register file for Modbus TCP, and Data Point for Profinet.

Note: the Ethernet card (RAC module) has a default IP Address of 192.168.1.2

Both Ethernet and USB communication allow the ability to

- Read ACU inlet and outlet air temperature
- Read and change cooling and cooling differential setpoints
- Read and change heating and heating differential setpoints
- Read and change the high and low temperature alarm settings
- Read and change the Gateway IP address, Device IP address, Subnet MASK, Trap IP address, and community string
- Read and change unit identification
- Read and change the state of IP address from static to dynamic or vice versa
- Read and change the air temperature unit of measure (from F to C or vice versa)
- Read current alarm status
- Evaporator fan control setting
- Read and change the control of door open switch

Software And Configuration File Downloads

As stated above, the PC interface tool, MIB file, EDS and EtherNet_IP Object file, Coil Register file, and Data Point file can be downloaded from remote access control support center link:
https://go.nVent.com/remote-access-control-support-center

USING HOFFMAN PC INTERFACE TOOL

© 2024 nVent

nVent HOFFMAN PC Interface Tool gives the user the ability to communicate with nVent HOFFMAN air conditioning unit as to read and write air temperature data, high and low temperature alarm setting, active alarms, and other information from the controller remotely using either Ethernet or USB connection. With nVent HOFFMAN PC Interface Tool a user has the ability to remotely manage and monitor hundreds of nVent HOFFMAN air conditioners both domestically and globally at one central location at user's own pace, so long as all air conditioners are configured in the same subnet in the network. nVent HOFFMAN PC Interface Tool also supports text message and email alerting to a service technician when an alarm occurs. In addition, the tool also provides data logging capability for data analysis.

USB COMMUNICATION MODE

NOTE: Before connecting the unit to the PC, make note of Comm Ports present. After the unit is connected to the PC, a new Comm Port will be added to the list. Recommend using the new Comm Port.

- In the nVent HOFFMAN A.C. Monitor main screen, click on Tools and uncheck Use Ethernet
- Click on Tools menu again, the Comm Port menu is now enabled
- Put the mouser icon to the Comm Port and to the right there is small box with dropdown arrow
- Click on the dropdown arrow next to the small box to view the list of the Comm Port
- Write down the list of the Comm Port
- Connect the Mini-b USB cable from the PC or laptop to the A/C unit
- Click on Tools menu and point the mouser icon to the Comm Port, the small box with dropdown arrow presents to the right
- Click on the dropdown arrow and select the newest or higher number of the Comm Port

TO VIEW THE CONTROLLER DATA INFORMATION FROM THE A/C UNIT

- In the nVent HOFFMAN A.C. Monitor main screen, select Single ACU Monitor tab
- Click on Enable Comm button, then the screen will be displayed the enclosure air temperature and other temperature settings information include the unit of measure
- The Enable Comm text on the button now changes to Disable Comm
- To stop the communication, click on the Disable Comm button and it will change to Enable Comm

TO CHANGE THE TEMPERATURE SETTINGS TO THE CONTROLLER

- In the Hoffman A.C. Monitor main screen, select Single ACU Settings tab
- Note that the Change Settings button is disable and all settings are grayed out. Click on Read Settings button, all settings are now displayed on screen and the Change Settings button is now enable
- To change any of the temperature setting, Unit ID, or Station Name, simply click up/down arrow on right of the box or highlight the current value and type the new value in the box
- Check the box on the left, then click on Change Setting buttons to save the new setpoint
- Click on Read Settings again to verify the new setpoint
- Select Single ACU Monitor tab and click on Enable Comm to read the new temperature settings from the controller
- Each of the setpoint should match the new variables that just entered from the Single ACU Settings tab

TO VIEW AND CHANGE THE ETHERNET CARD (RAC) INFORMATION

- In the nVent HOFFMAN A.C. Monitor main screen, select Single ACU Ethernet Info tab and notice that the Reprogram ACU button is disabled
- Click on Read Ethernet Info button, the Ethernet information will be displayed and the Reprogram ACU button is enable
- To change the Ethernet configuration such as Device IP Address, Gateway IP, and Trap IP, make sure to change the Community string to private from public. Note that case is very sensitive. The wording must be lower case only.
- Enter the new network configuration to Device IP address, Gateway IP, and Trap IP, then click on Reprogram ACU button to write to the network card
- In order to be recognized the new networking configurations in local network, cycle power to the A/C unit is required

TO CHANGE THE STATIC NETWORK TO DYNAMIC NETWORK MODE

- In the Single ACU Ethernet Info tab screen, click on Read Ethernet Info button to read the network card information. Note that the Reprogram ACU button is now enable
- Check the box next to the Use DHCP Server on the upper left corner of the screen
- Click on Reprogram ACU button. Now the network is switched to dynamic from static mode
- To change the dynamic mode to static mode, in the Single ACU Ethernet Info tab window click on Read Ethernet Info button
- Uncheck the box next to the Use DHCP Server on the upper left corner of the screen
- Click on Reprogram ACU button to switch to static mode

ETHERNET COMMUNICATION MODE

© 2024 nVent

- In the nVent HOFFMAN A.C. Monitor screen, click on **Tools** on the main menu
- In the dropdown window, check the **Use Ethernet** and notice that **Comm Port** is now disabled
- Select **Single ACU Monitor** tab, in the window click on the **Device IP** box and type the IP address that need to communicate to the network card
- Click on the **Community** box and then type the word **private**

  Note that there are two community strings where one is for read ONLY and one is for read/ write. The word "public" allows to read ONLY and "private" allows to read and write

- Click on **Enable Comm** button to communicate to the network card and read the temperature information from the controller
- Now the temperature settings information in the controller present on the screen
- To view and change the temperature setpoints, Ethernet card configurations, static and dynamic networking mode, simply follow the same procedures that define for the USB communication mode above

TO MONITOR MULTIPLE A/C UNITS IN THE NETWORK

With the Ethernet networking mode, it provides user with the ability to manage and monitor hundreds of the A/C units from distance domestically and globally at one central location as long as all A/C units configure in the same subnet in the network. Refer to remote access control (RAC) Instruction Manual for configuring multiple units and with text message and email capability in nVent HOFFMAN A.C. Monitor software. The remote access control Instruction Manual, P/N: 89091002 can be downloaded from nVent support center link, https://go.nVent.com/remote-access-control-support-center.

ALARM LOG ACCESSIBLE WITH SUPPORT PROTOCOL

Using custom software with below supporting file gives the user ability to view a log of the last 25 alarms

- MIB file for SNMP protocol
- Register and Coil file for Modbus TCP protocol
- EDS and/or EtherNet_IP Objects file for EtherNet/IP protocol
- Profinet Data Point file for Profinet protocol

© 2024 nVent

REMOTE ACCESS CONTROL PIN-OUT

	FUNCTION	NAME	PIN#	WIRE#
J6	RETURN	C	1	BLK75
	ENCL MI	NO1	2	BLK77
	COOL	NO2	3	ORG78
	NA	N03	4	_
	HEAT	NO4	5	BRN76
J7	RETURN	C	2	YEL39
	ALAR RELAY OUTPUT	NO5	3	YEL38
J1	GROUND	G0	1	BLK40
	POWER (24VAC)	G	2	WHT41
J2	NA	5V	1	_
	NA	S3	2	_
	INLET TEMP PROBE	S1	3	RED
	NA	Y1	4	_
	DOOR OPEN SWITCH	ID1	5	WHT63
	GROUND	O	6	WHT
	RESERVED	S5	7	_
	OUTLET TEMP PROBE	S2	8	RED45
	NA	Y2	9	_
	MAL-FUNCTION ALARM	ID2	10	BLU88
J3	RESERVED	ID3	1	_
	UNIT REMOTE ON/OFF	ID5	2	_
	NA	+V	3	_
	RESERVED	S6	4	_
	NA	VL	5	_
	RESERVED	ID4	6	_
	GROUND	O	7	_
	RESERVED	S4	8	_
J4	DATA (-)	-	1	BLK
	DATA (+)	+	2	RED
	GROUND	O	3	WHT
J5	DATA (-)	-	1	_
	DATA (+)	-	2	_
	GROUND	O	3	_

© 2024 nVent

TECHNICAL INFORMATION

S06 MODELS 300/500W

S06 SCHEMATIC 300/500W

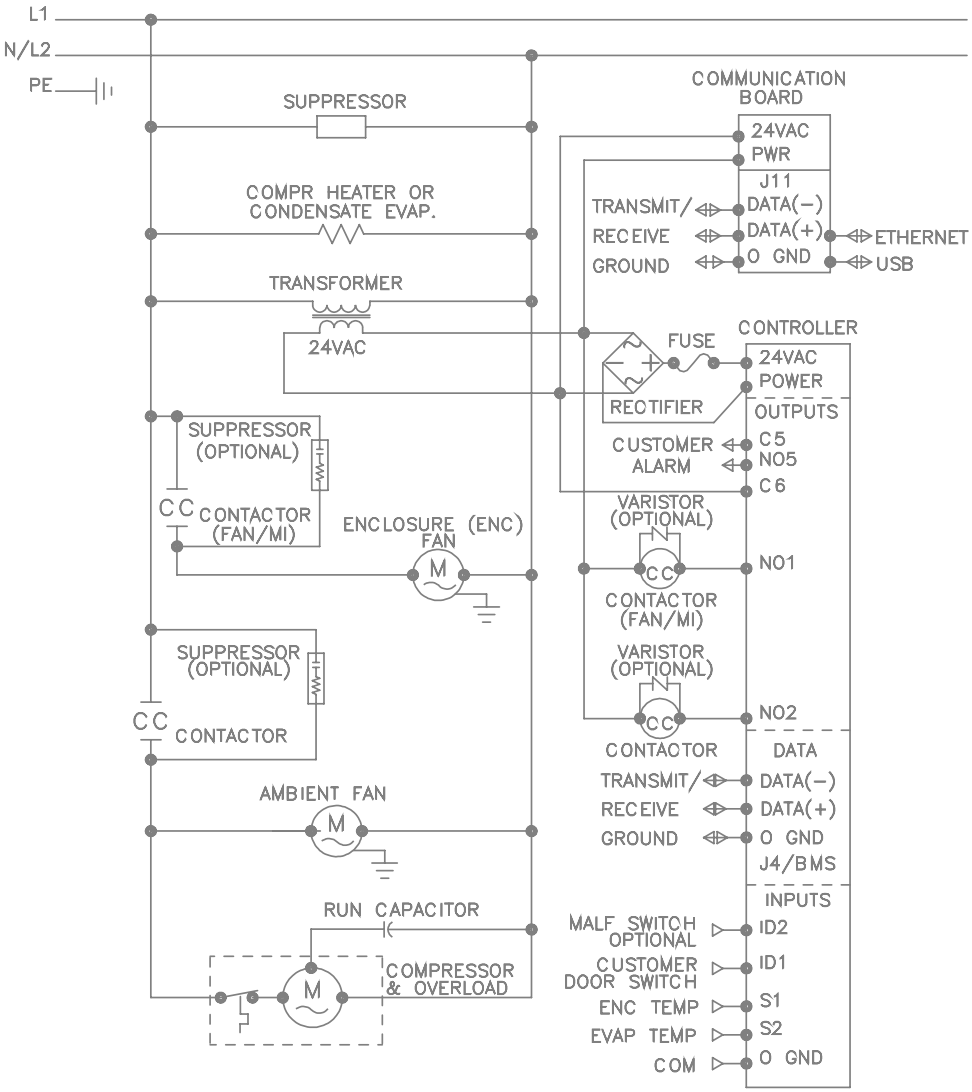

89107580 REV. H ELECTRICAL SCHEMATIC

© 2024 nVent

S06 WIRE DIAGRAM 300/500W

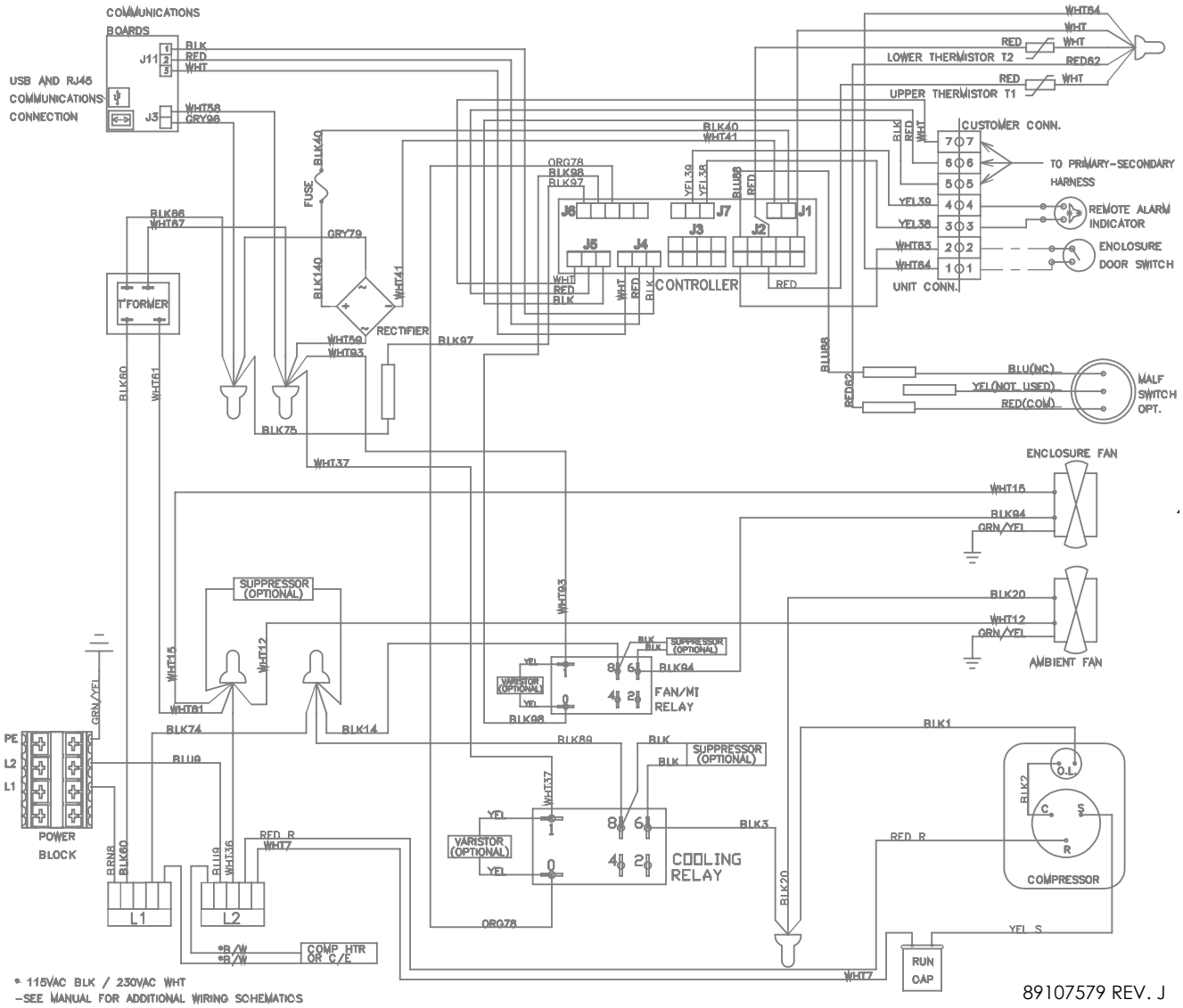

© 2024 nVent

S06 DIMENSIONAL DRAWINGS

300W

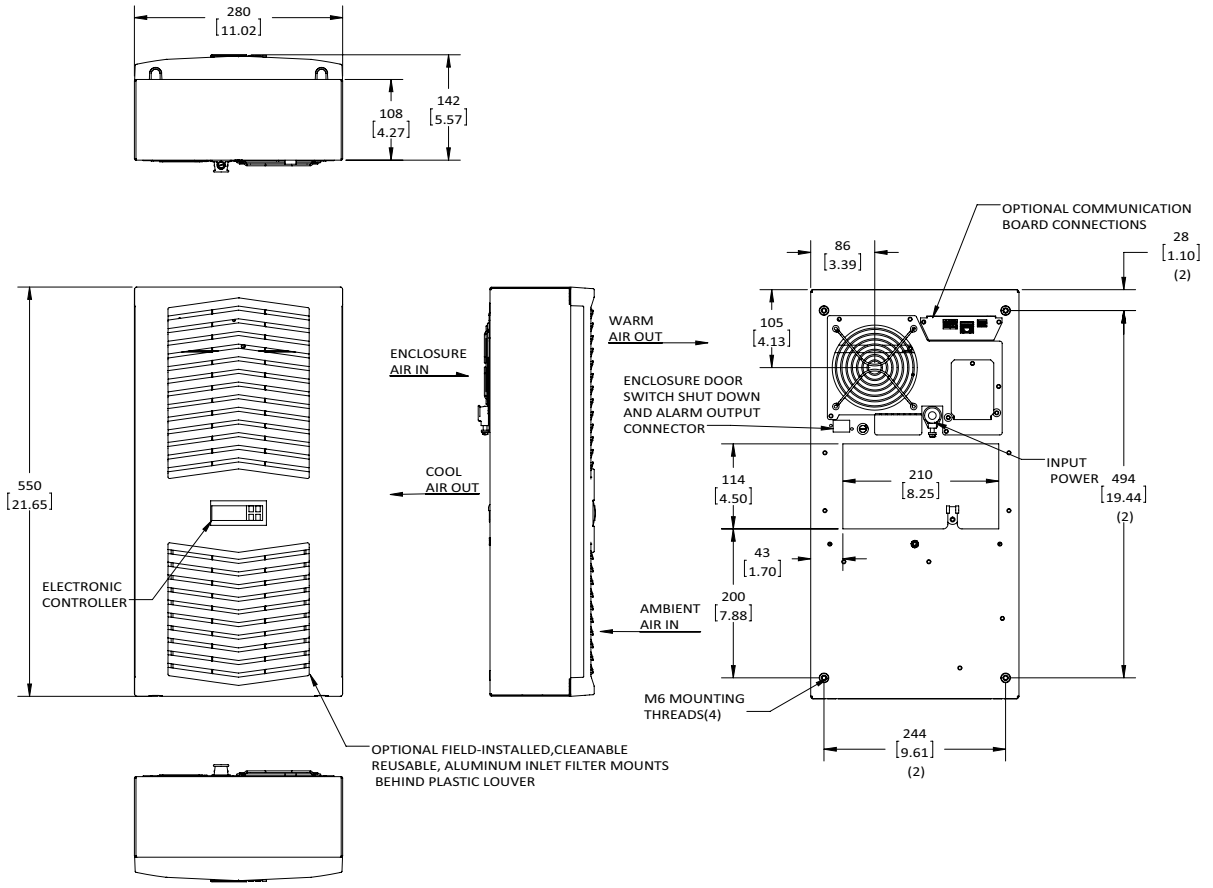

500W

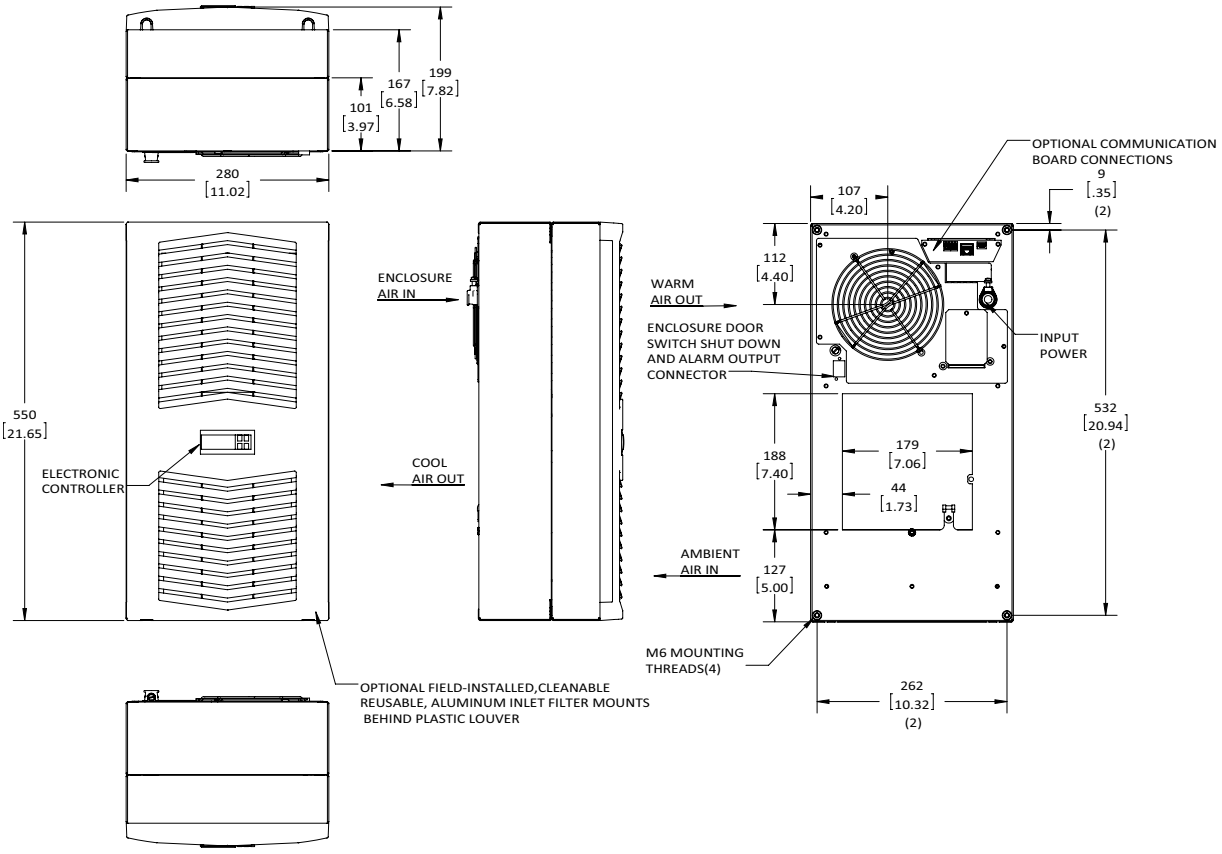

© 2024 nVent

S06 INSTALLATION INSTRUCTION

1. See Receiving The Air Conditioner and Handling and Testing The Air Conditioner on page 9.
2. Using the cutout template provided with the unit, prepare the enclosure. See Figure 7 and Figure 8. The front of the unit requires a half meter clearance for proper airflow. Five centimeters is required on each side of the unit. To avoid condensate overflow, unit must be mounted within 3° of level.
3. Refer to mounting instructions on page 11.
4. Adjust controller to desired cabinet temperature. Refer to Displaying And Changing Program Settings on page 16 for controller adjustment and operation.

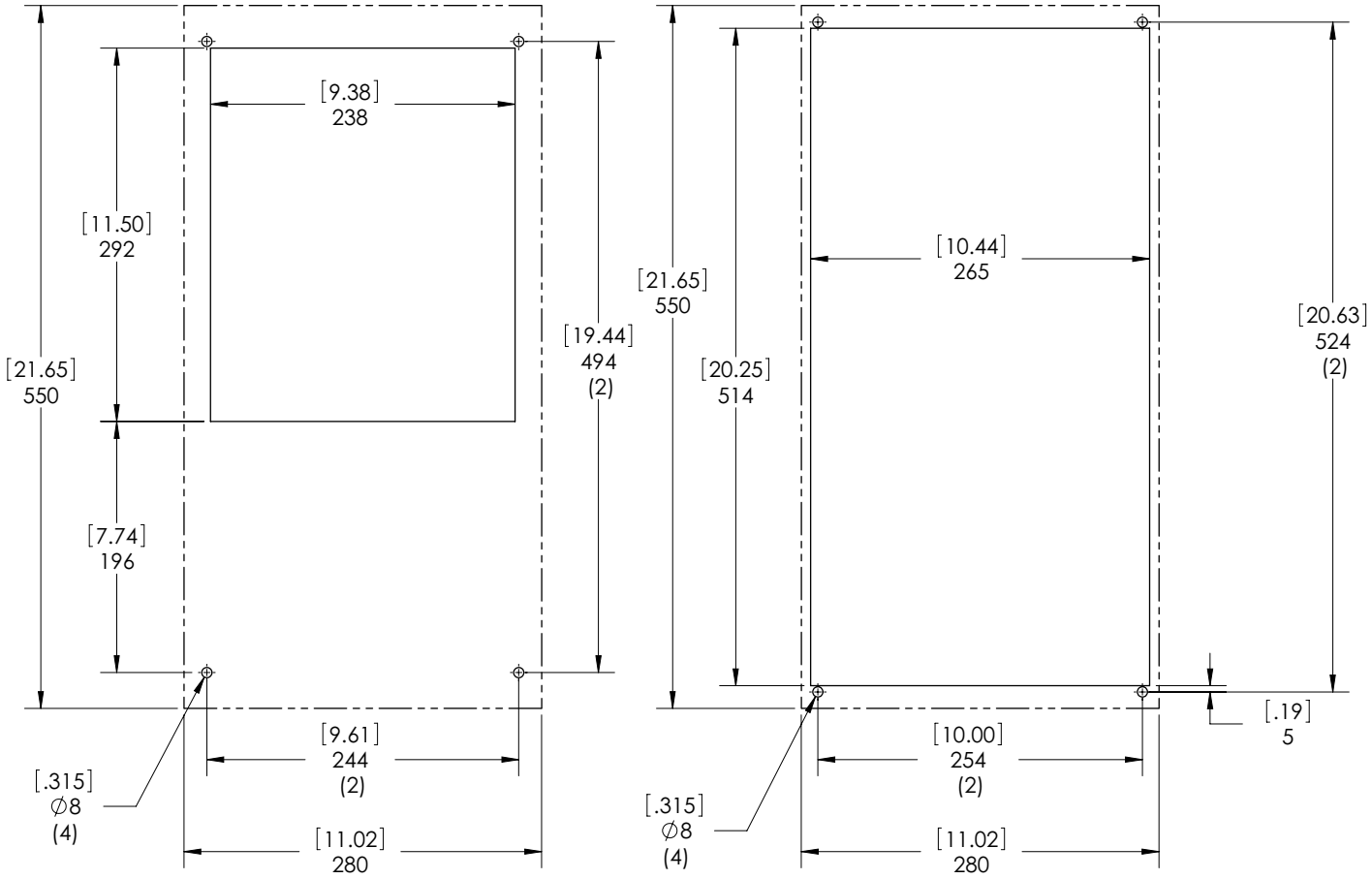

Surface Mount

Full Recess Mount

Figure 7
S06 300W Cutout Drawing
Dashed Lines Represent The Air Conditioner

© 2024 nVent

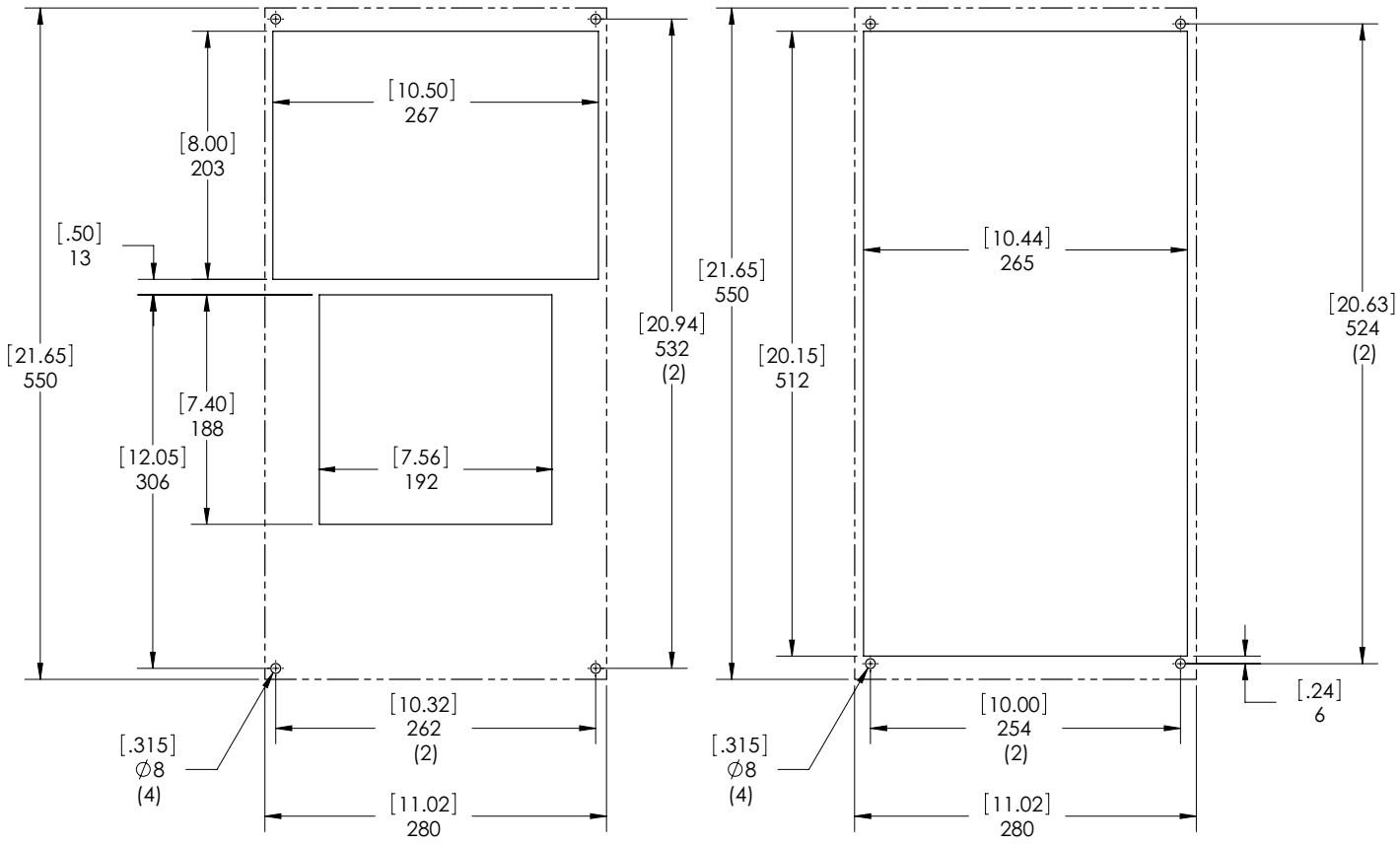

Surface Mount

Partial and Full Recess Mount

Figure 8
S06 500W Cutout Drawing
Dashed Lines Represent The Air Conditioner

© 2024 nVent

S06 UNIT CHARACTERISTICS

UNIT	300W 115V	300W 230V	500W 115V	500W 230V
CATALOG NUMBER				
Indoor Model without Communications Board (°C Controller)	**S060316G031**	**S060326G031**	**S060516G031**	**S060526G031**
Indoor Model with Communications Board (°C Controller)	**S060316G041**	**S060326G041**	**S060516G041**	**S060526G041**
Indoor Model without Communications Board (°F Controller)	**S060316G050**	**S060326G050**	**S060516G050**	**S060526G050**
Indoor Model with Communications Board (°F Controller)	**S060316G060**	**S060326G060**	**S060516G060**	**S060526G060**
COOLING PERFORMANCE				
Total L35 L35, 50Hz, according to DIN EN 14511 (Watt)	370	370	550	550
Cooling performance L35 L35 (Watt) 50/60Hz	370 / 420	370 / 420	550 / 640	550 / 640
Cooling performance L35 L50 (Watt) 50/60Hz	190 / 230	190 / 230	320 / 380	320 / 380
Refrigerant	R134a	R134a	R134a	R134a
Refrigerant Charge (g)	133	128	162	162
Max. allowable operating pressure (p. max.) bar	28	28	28	28
Operating Temperature Range (Min/Max °C)	10 / 52 (50Hz) 10 / 55 (60Hz)	10 / 55	10 / 55	10 / 55
Operating Temperature Range (Min/Max °F)	50 / 126 (50Hz) 50 / 131 (60Hz)	50 / 131	50 / 131	50 / 131
Setting Temperature Range (Min. / Max. °C Controller)	20 / 55	20 / 55	20 / 55	20 / 55
Setting Temperature Range (Min. / Max. °F Controller)	72 / 120	72 / 120	72 / 120	72 / 120
Airflow at 0 Static Pressure:				
Internal loop (m³/h)	109 / 124	109 / 124	197 / 233	197 / 233
External loop (m³/h)	129 / 156	129 / 156	189 / 219	189 / 219
Duty Cycle	100%	100%	100%	100%
ELECTRICAL DATA				
Rated Voltage (Volt)	100 / 115	230	115	230
Phase	1~	1~	1~	1~
Frequency (Hz)	50/60	50/60	50/60	50/60
Operating Range	+/- 10%	+/- 10%	+/- 10%	+/- 10%
Max power Consumption 50/60Hz L35 L35 (Watt)	270 / 300	300 / 320	450 / 470	450 / 480
Max power Consumption 50/60Hz L35 L50 (Watt)	280 / 320	330 / 350	490 / 540	510 / 540
Max. Nominal Current (Amps)	4.0 / 3.8	1.8 / 1.7	6.5 / 6.1	2.6 / 2.9
Starting Current (Amps)	13 / 13	6.0 / 6.0	21 / 20	9.0 / 10.0
Pre-fuse T (Amps)	15	15	15	15
Agency Approvals	UL listed, cUL listed, EAC, CE			
Power Input Description	Terminal Block			
PERFORMANCE FACTOR (EER), 50Hz, DIN EN 14511				
Cooling Performance L35 / L35	1.37 / 1.40	1.23 / 1.31	1.22 / 1.36	1.24 / 1.35
Cooling Performance L35 / L50	0.68 / 0.70	0.58 / 0.65	0.64 / 0.70	0.62 / 0.70
ENCLOSURE PROTECTION				
IP Code (External loop / Internal loop)	IP34 / IP54	IP34 / IP54	IP34 / IP54	IP34 / IP54
CONTROLLER				
Description	Smart controller with display			
Controller Location	Ambient side			
Factory Default Setpoint (°C Controller)	35	35	35	35
Factory Default Setpoint (°F Controller)	80	80	80	80
SOUND LEVEL				
At 1 M (dBA)	66	66	68	68
UNIT CONSTRUCTION				
Material	Steel		Steel	
Finish	RAL 7035		RAL 7035	
UNIT DIMENSIONS				
Height (mm)	550	550	550	550
Width (mm)	280	280	280	280
Depth (mm)	140	140	206	206
Weight (kg)	13	13	15	15

© 2024 nVent

S06 COMPONENTS

Item	Model Series	300W 115V	300W 230V	500W 115V	500W 230V
	Part Descriptions	**Part Numbers**			
1	Capacitor, Compressor, Run	52603209SP	52603210SP	89107709SP	89106525SP
2	Capillary Tube	99042047SP	99042047SP	99054030SP	99054030SP
3	Coil, Condenser	89110804SP	89110804SP	89107198SP	89107198SP
4	Coil, Evaporator	89107600SP	89107600SP	89107023SP	89107023SP
5	Communication Board (optional)	89145457SP	89145457SP	89145457SP	89145457SP
6	Compressor	10101682SP	101026101SP	89109026SP	89108369SP
7	Contactor Compressor	10100536SP	10100536SP	10100536SP	10100536SP
8	Relay, Evaporator Fan	10100536SP	10100536SP	10100536SP	10100536SP
9	Smart Controller °C	90272220SP	90272220SP	90272220SP	90272220SP
	Smart Controller °F	89202719SP	89202719SP	89202719SP	89202719SP
10	Drain Tube Kit (optional)	101027177SP	101027177SP	101027177SP	101027177SP
11	Filter Air, Reusable (optional)	89106978SP	89106978SP	89106978SP	89106978SP
12	Filter/Dryer	52602803SP	52602803SP	52602803SP	52602803SP
13	Fan, Condenser	89117829SP	89117830SP	89117829SP	89117830SP
14	Fan, Evaporator	13101501SP	13101502SP	12101201SP	12101202SP
15	Thermal Overload, Compressor	10100767SP	10100768SP	89109877SP	89112627SP
16	Thermistor	89075654SP (2)	89075654SP (2)	89075654SP (2)	89075654SP (2)
17	Transformer, 24V	10100694SP	10100693SP	10100694SP	10100693SP
18	Fuse (Controller)	90596971SP	90596971SP	90596971SP	90596971SP
	Accessories				
19	Installation Kit	90221634QDSP	90221634QDSP	90221634QDSP	90221634QDSP
20	Unit Mounting Gasket	90241618SP	90241618SP	90241618SP	90241618SP
21	Mounting standoffs	NA	NA	89105488SP (4)	89105488SP (4)
	Structural Parts				
22	Louvered Grill Panel	89105442SP	89105442SP	89105442SP	89105442SP
23	Panel Strike Clip (Pkg. 4)	90245472SP	90245472SP	90245472SP	90245472SP
24	Body Catch Clip (Pkg. 4)	89105486SP	89105486SP	89105486SP	89105486SP
25	Body Front Shell	NA	NA	89104023SP	89104023SP

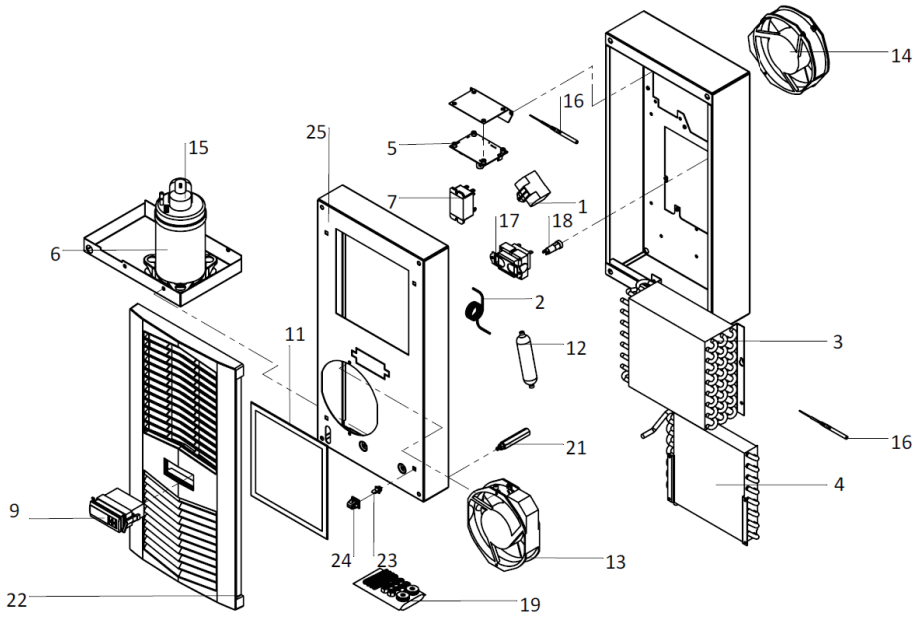

© 2024 nVent

S10 MODELS 1000/1500W

S10 SCHEMATICS

1000W 115V, 230V

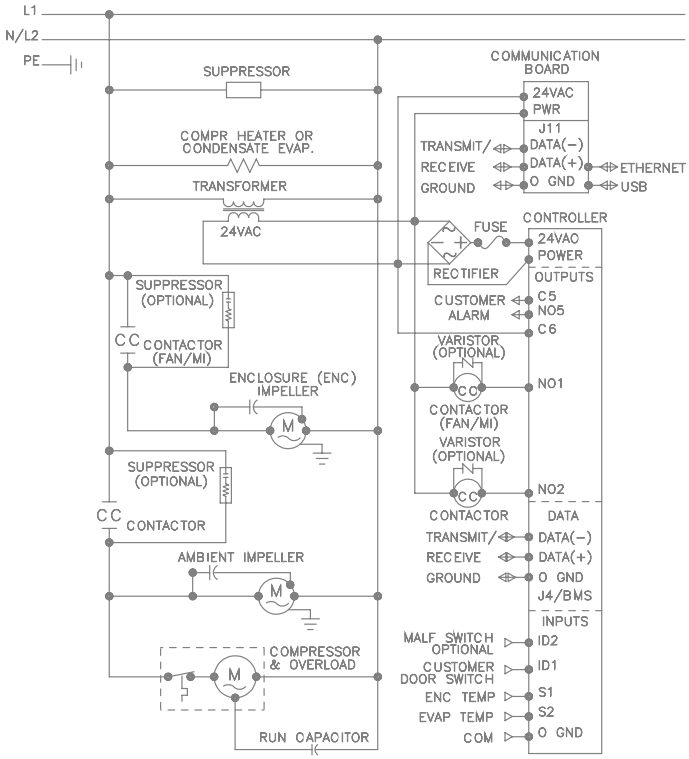

89107582 REV. H

1000W 460V

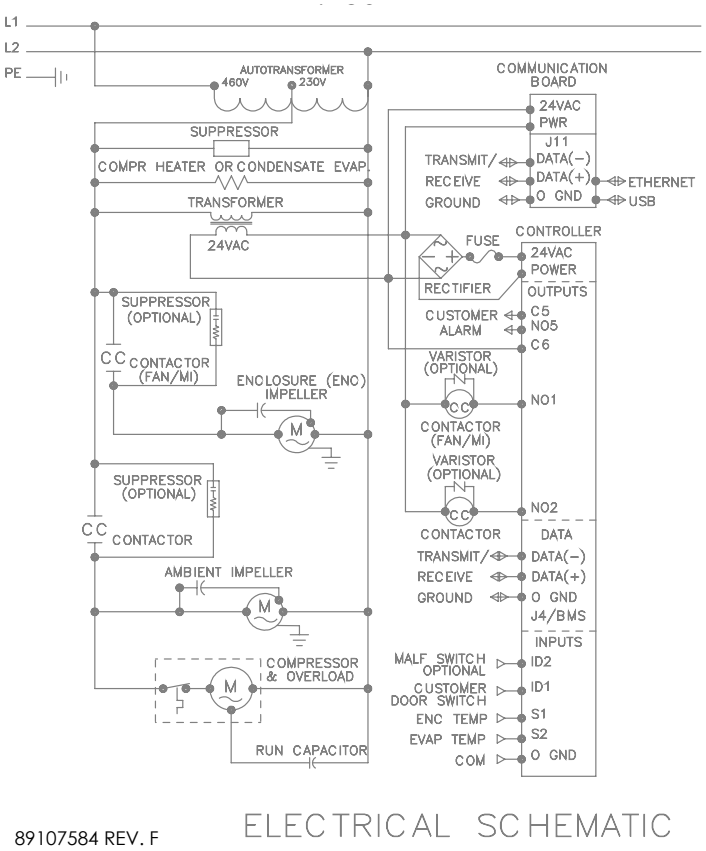

89107584 REV. F

© 2024 nVent

1500W 115V

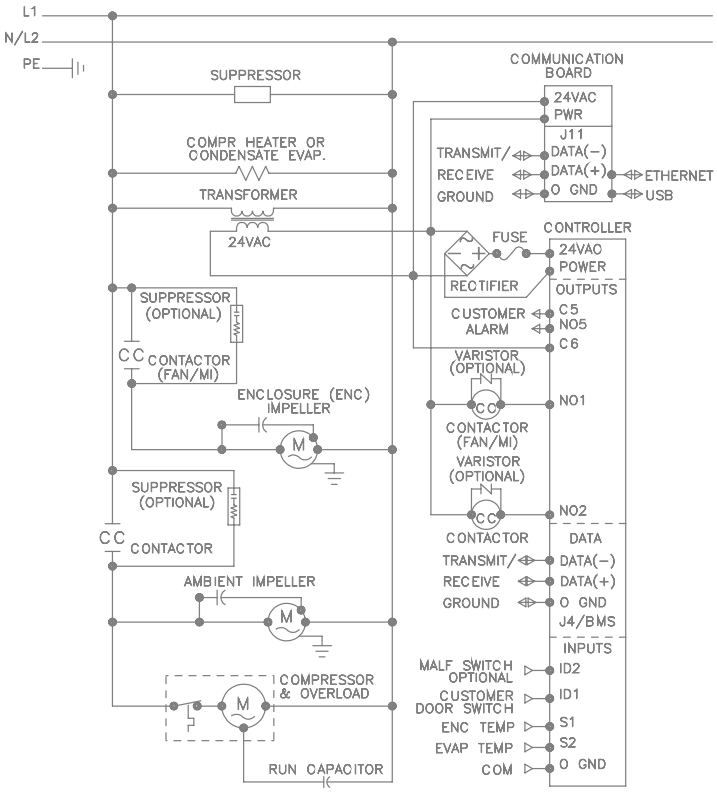

ELECTRICAL SCHEMATIC

89107582 REV. H

1500W 230V

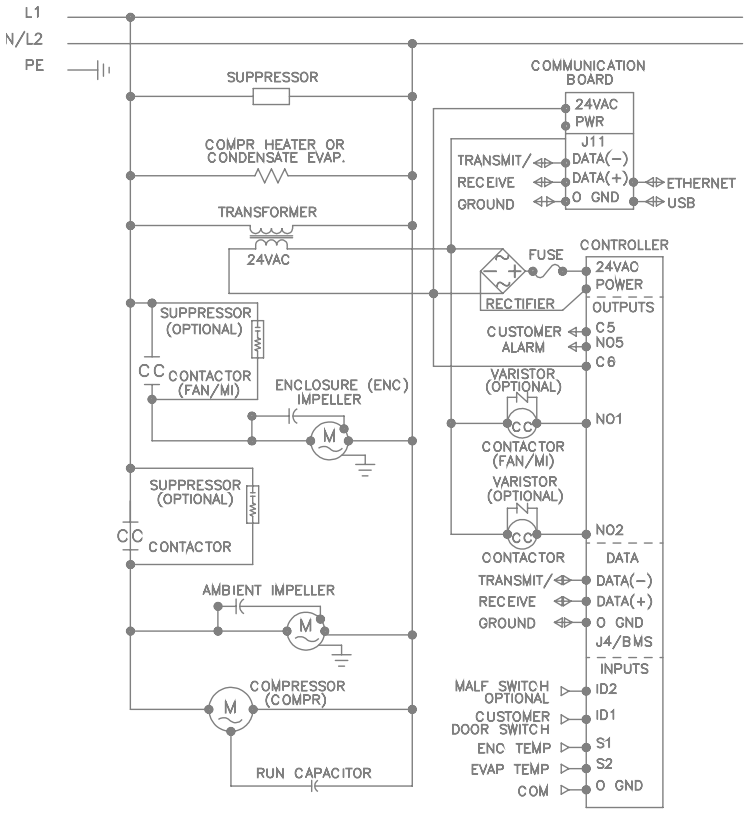

89107586 REV. I

ELECTRICAL SCHEMATIC

© 2024 nVent

1500W 460V

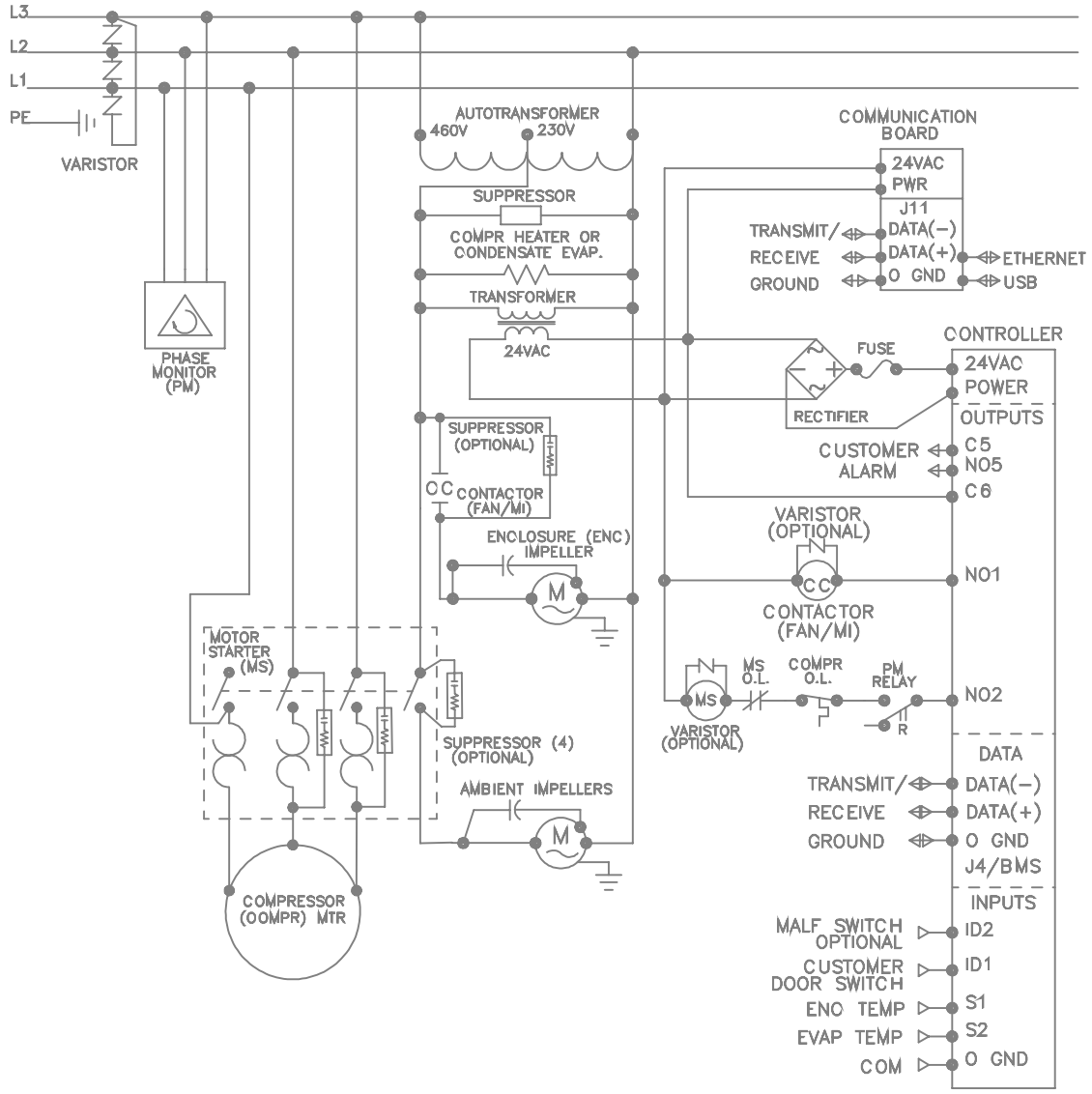

89107589 REV. J

ELECTRICAL SCHEMATIC

© 2024 nVent

S10 WIRE DIAGRAMS

1000W 115V, 230V

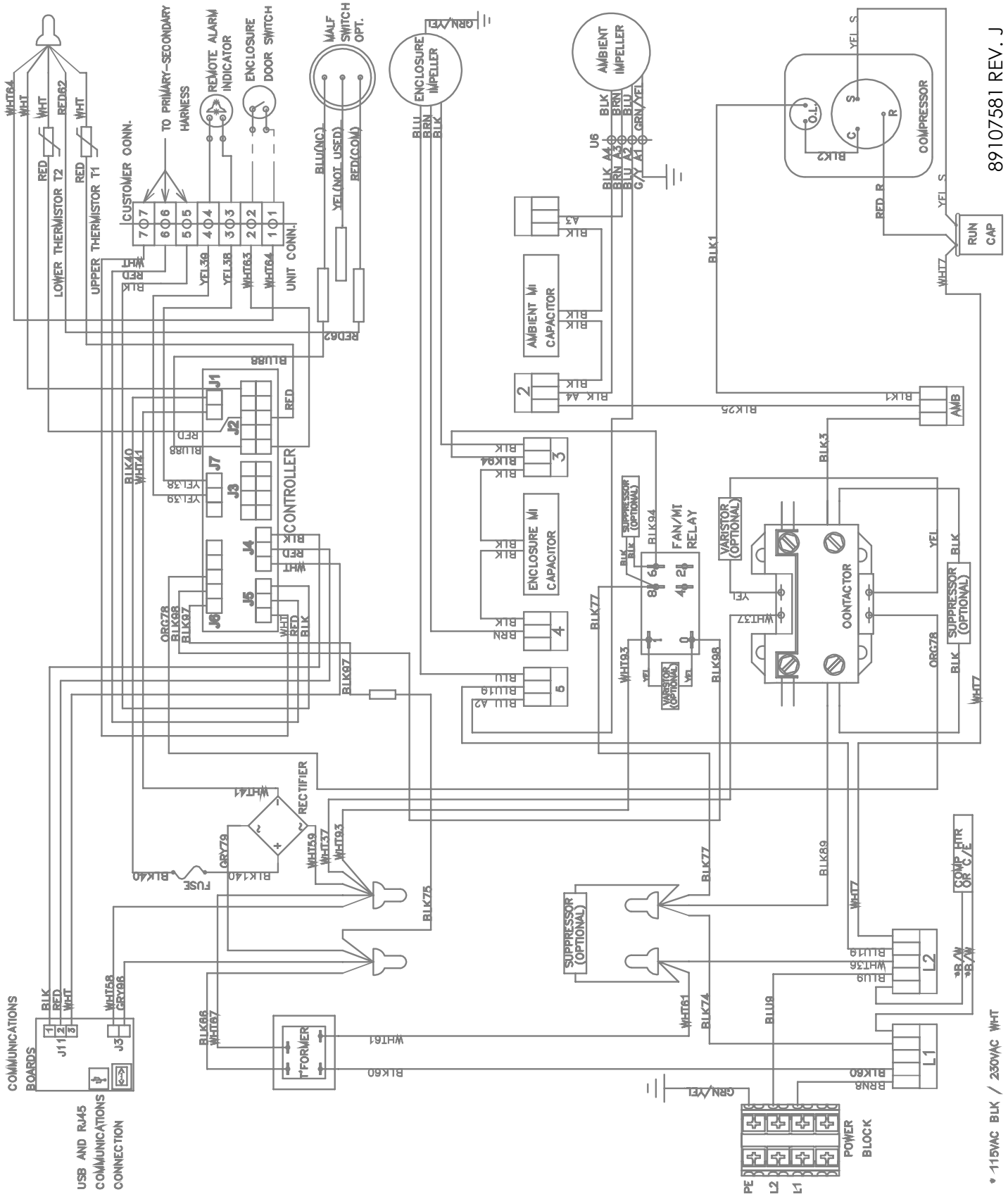

© 2024 nVent

1000W 460V

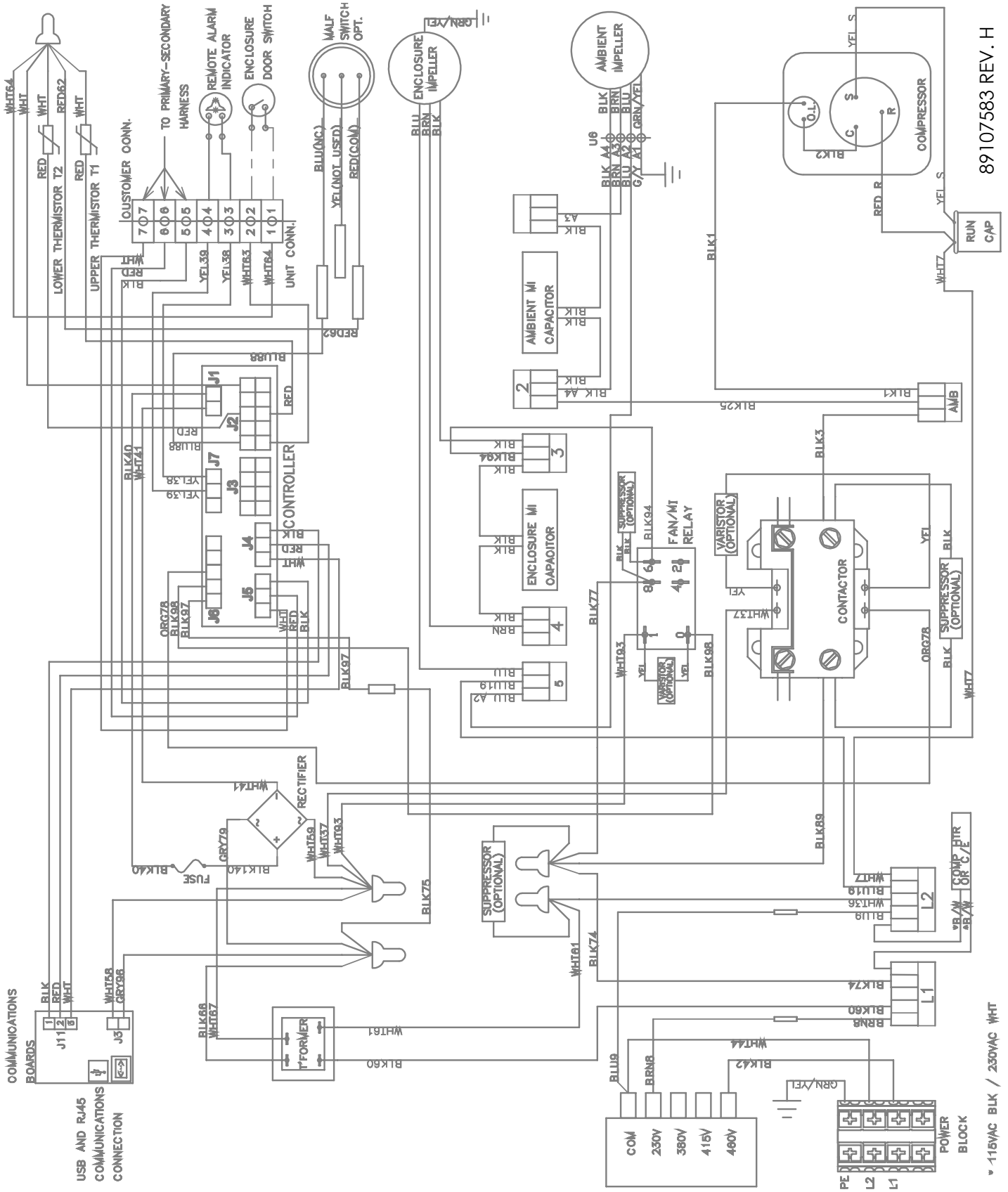

© 2024 nVent

1500W 115V

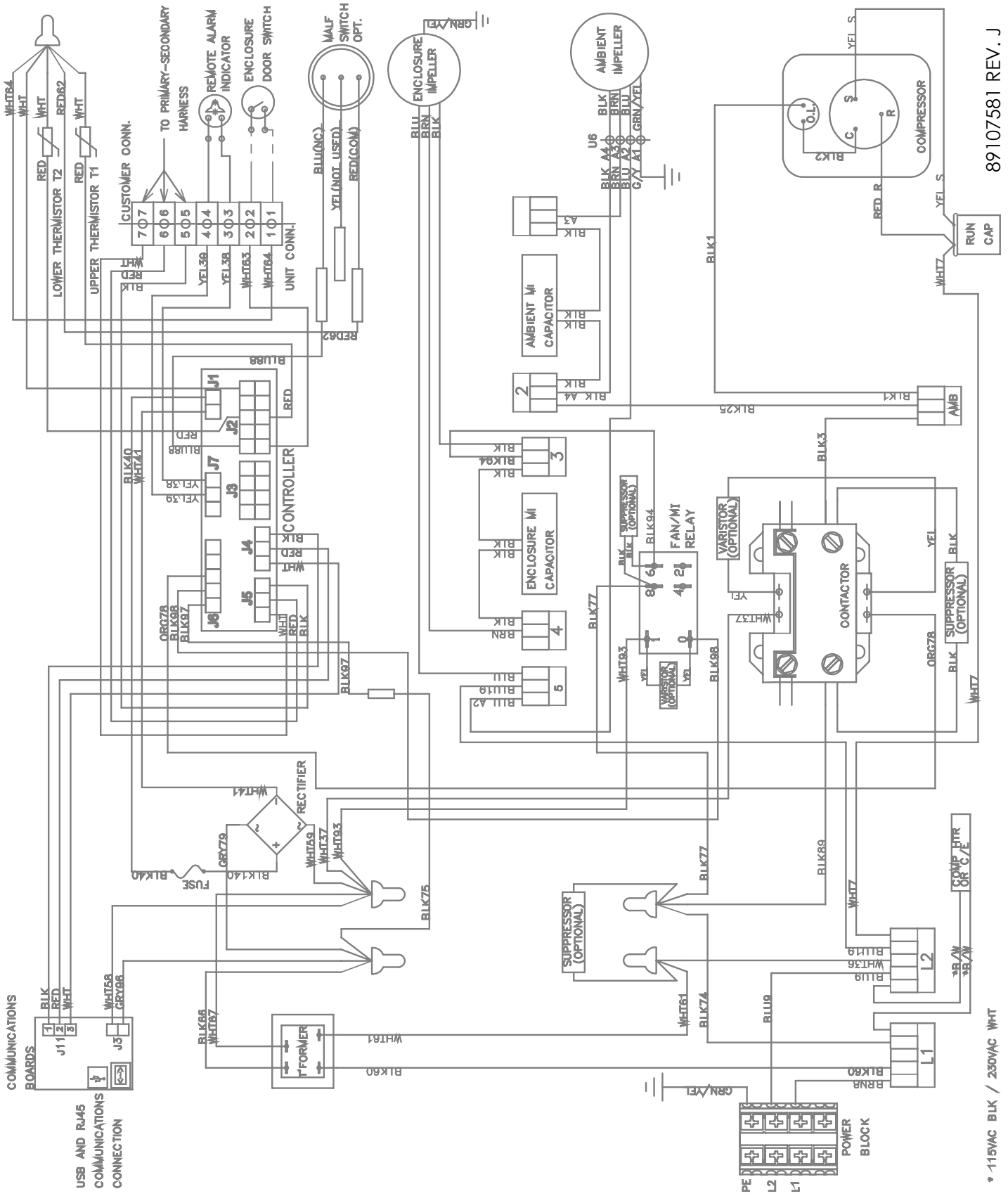

© 2024 nVent

1500W 230V

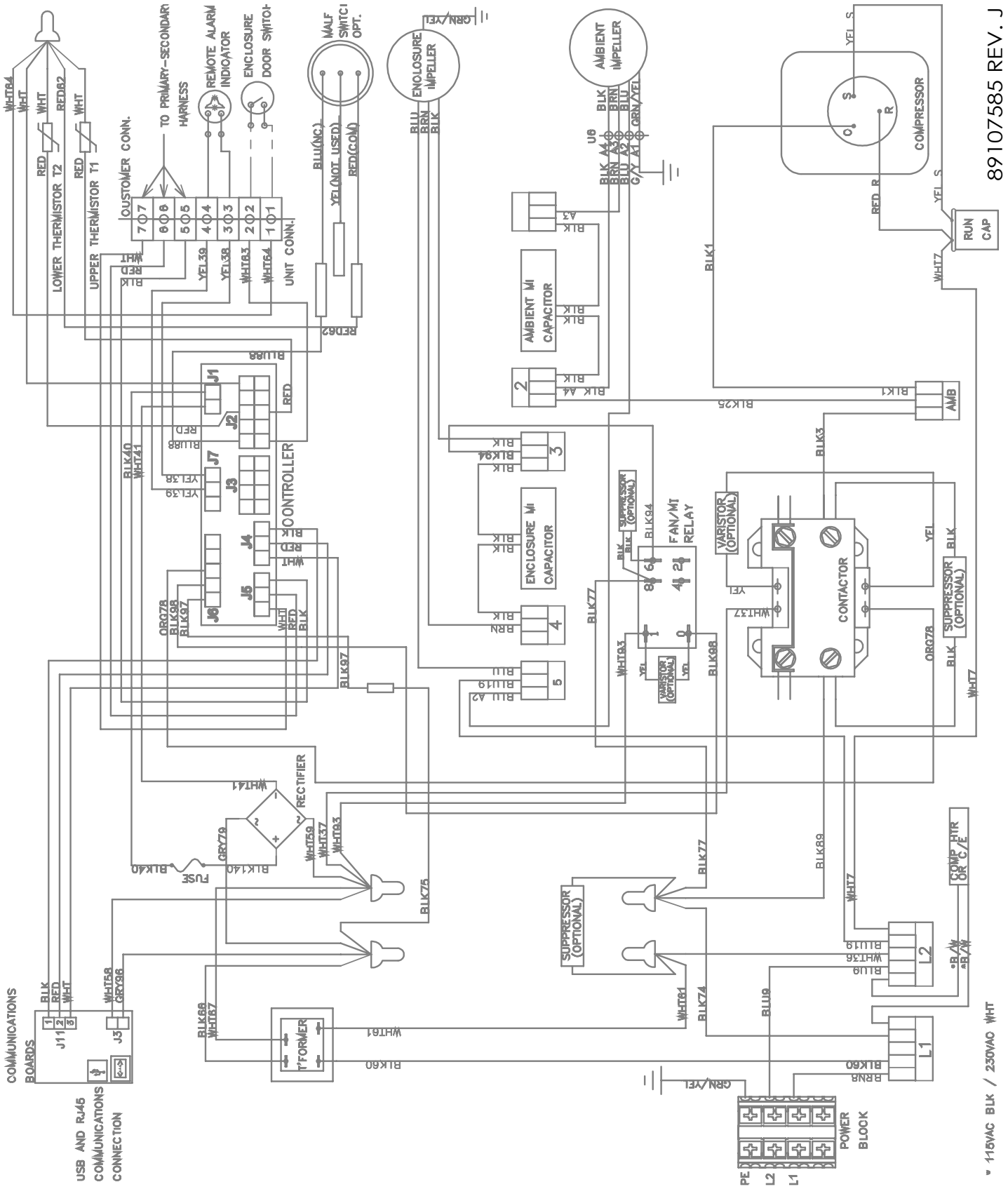

© 2024 nVent

1500W 460V

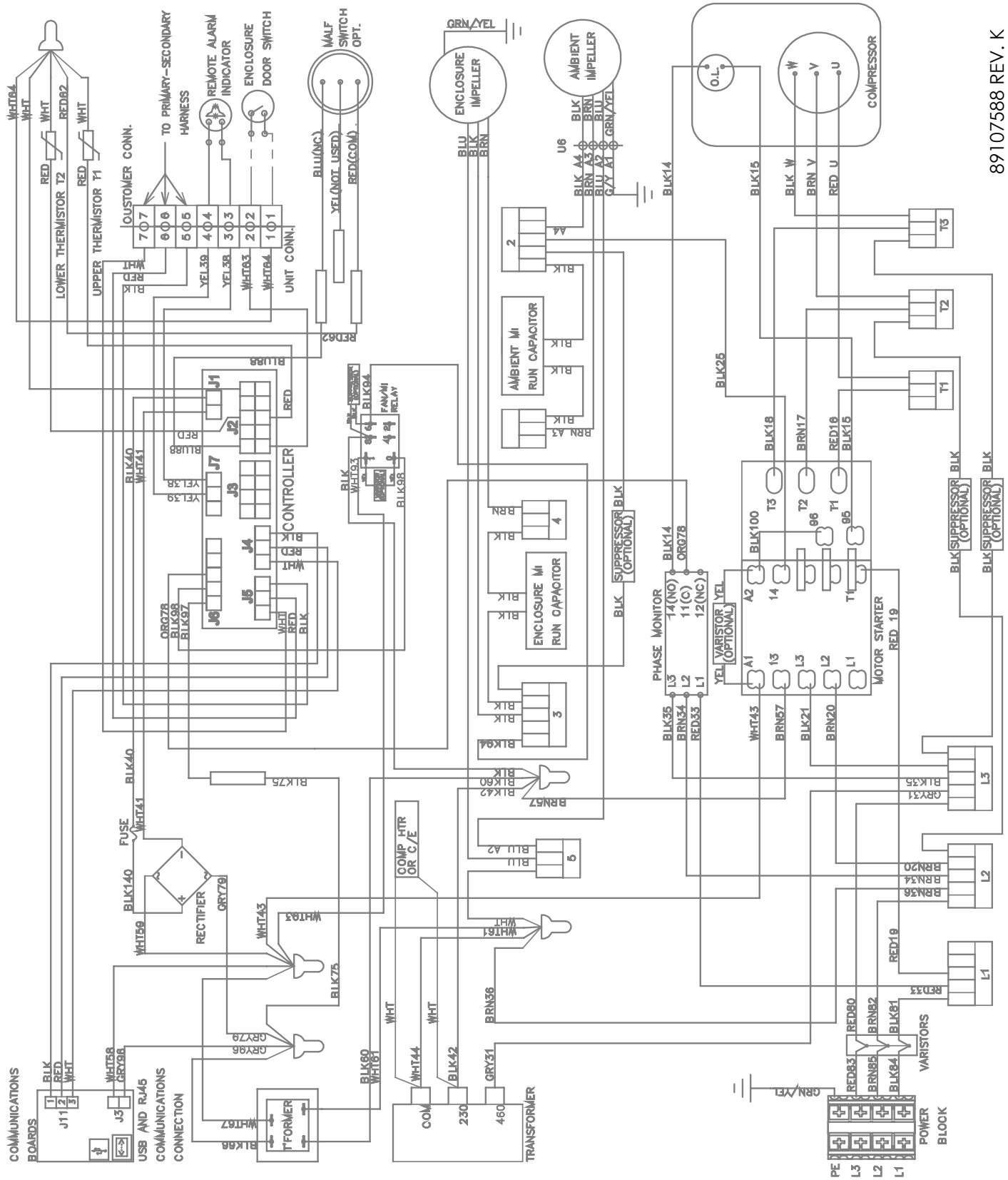

© 2024 nVent

S10 DIMENSIONAL DRAWING

1000/1500W

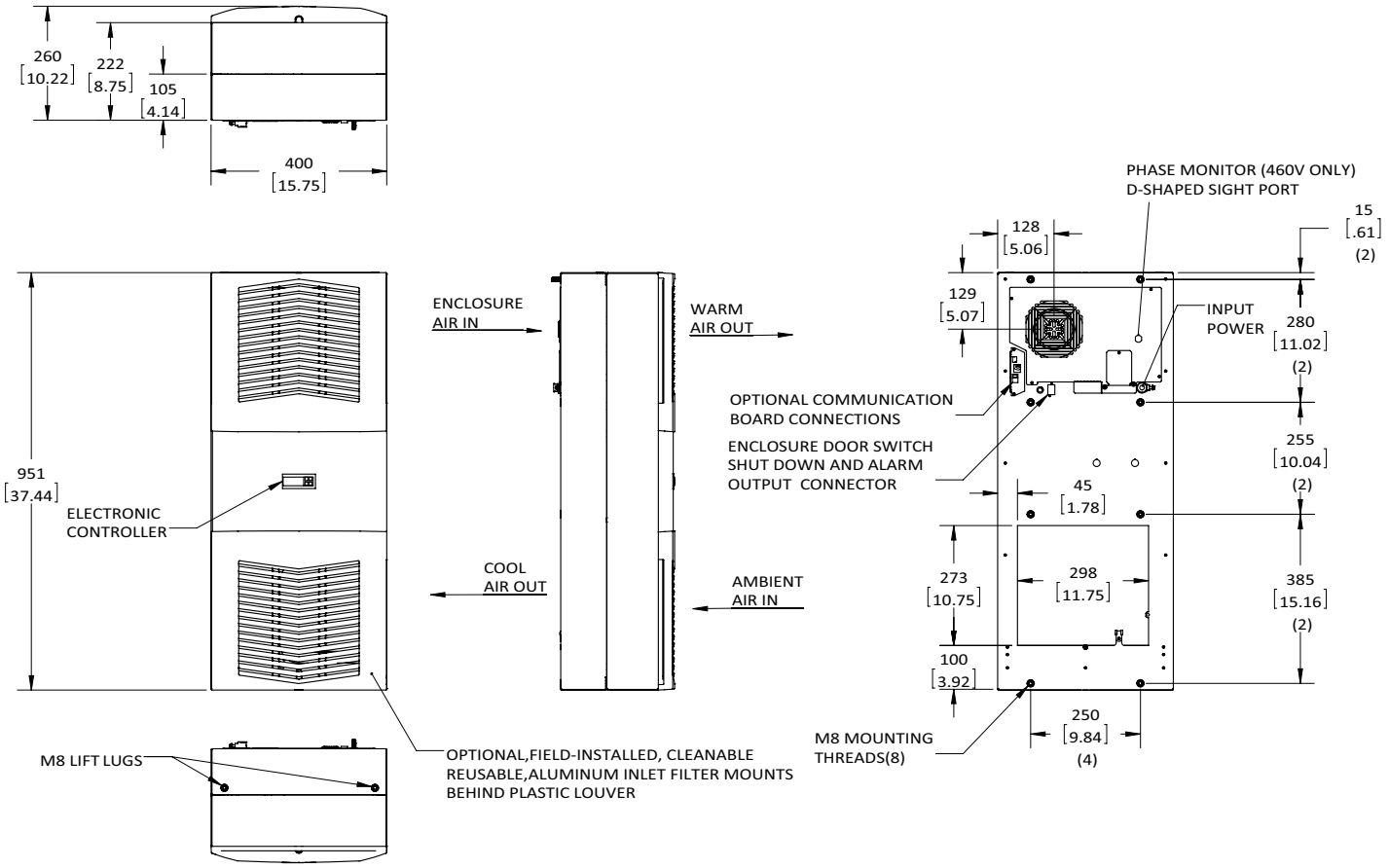

© 2024 nVent

S10 INSTALLATION INSTRUCTION

1. See Receiving The Air Conditioner and Handling and Testing The Air Conditioner on page 9.
2. Using the cutout template provided with the unit, prepare the enclosure. See Figure 9. The front of the unit requires a half meter clearance for proper airflow. Five centimeters is required on each side of the unit. To avoid condensate overflow, unit must be mounted within 3° of level.
3. Refer to mounting instructions on page 11.
4. Adjust controller to desired cabinet temperature. Refer to Displaying And Changing Program Settings on page 16 for controller adjustment and operation.

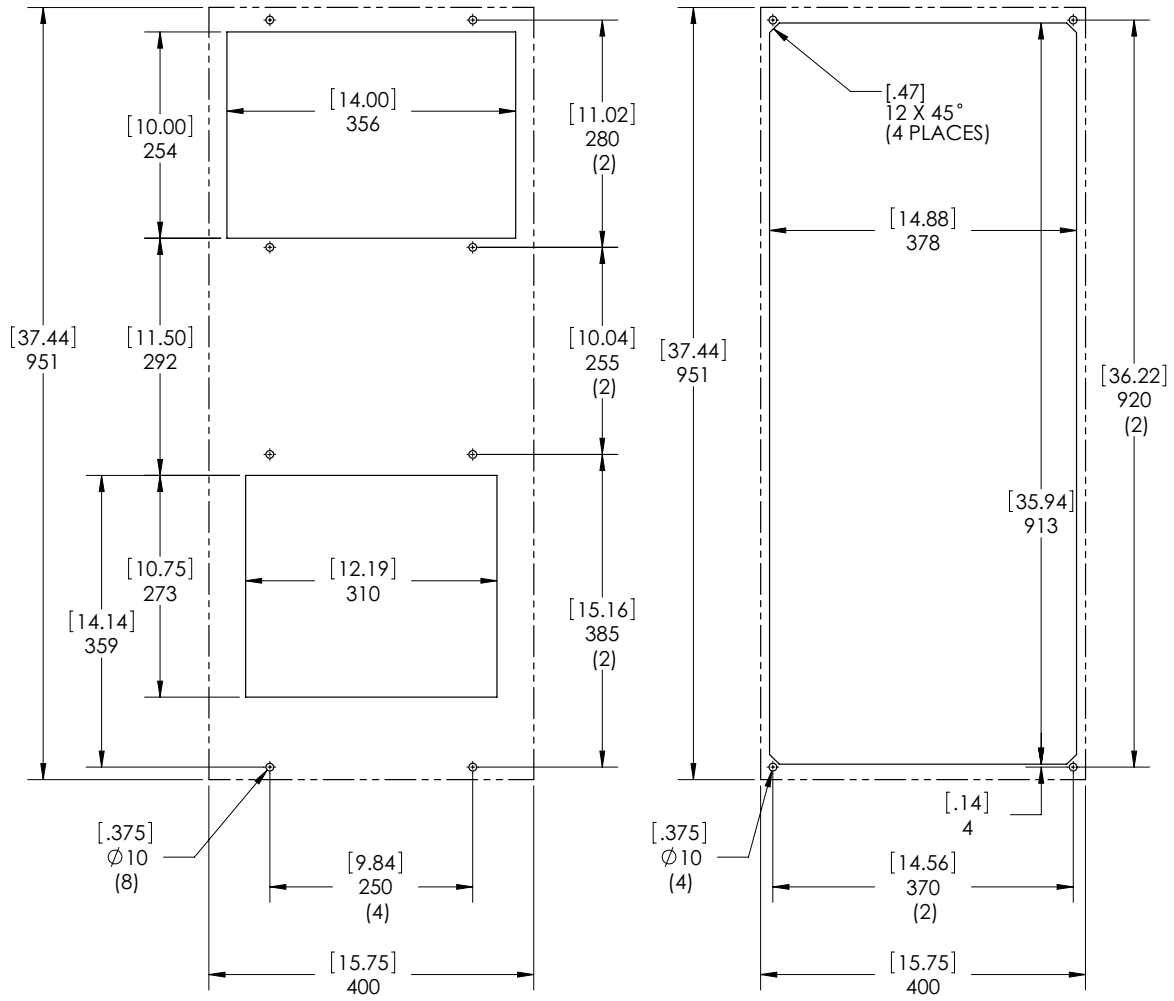

Surface Mount

Partial and Full Recess Mount

Figure 9
S10 1000/1500W Cutout Drawing
Dashed Lines Represent The Air Conditioner

© 2024 nVent

S10 UNIT CHARACTERISTICS (115V, 230V)

UNIT	1000W 115V	1000W 230V	1500W 115V	1500W 230V
CATALOG NUMBER				
Indoor Model without CommuNnications Board (°C Controller)	**S101016G031**	**S101026G031**	**S101516G031**	**S101526G031**
Indoor Model with Communications Board (°C Controller)	**S101016G041**	**S101026G041**	**S101516G041**	**S101526G041**
Indoor Model without CommuNnications Board (°F Controller)	**S101016G050**	**S101026G050**	**S101516G050**	**S101526G050**
Indoor Model with Communications Board (°F Controller)	**S101016G060**	**S101026G060**	**S101516G060**	**S101526G060**
COOLING PERFORMANCE				
Total L35 L35, 50Hz, according to DIN EN 14511 (Watt)	1300	1300	1800	1800
Cooling performance L35 L35 (Watt) 50/60Hz	1300 / 1380	1300 / 1380	1800 / 1880	1800 / 1880
Cooling performance L35 L50 (Watt) 50/60Hz	900 / 1000	900 / 1000	1300 / 1380	1300 / 1380
Refrigerant	R134a	R134a	R134a	R134a
Refrigerant Charge (g)	425	283	425	425
Max. allowable operating pressure (p. max.) bar	28	28	28	28
Operating Temperature Range (Min/Max °C)	10 / 55	10 / 55	10 / 55	10 / 55
Operating Temperature Range (Min/Max °F)	50 / 131	50 / 131	50 / 131	50 / 131
Setting Temperature Range (Min. / Max. °C Controller)	20 / 55	20 / 55	20 / 55	20 / 55
Setting Temperature Range (Min. / Max. °F Controller)	72 / 120	72 / 120	72 / 120	72 / 120
Airflow at 0 Static Pressure:				
Internal loop (m^3/h)	350 / 391	350 / 391	342 / 391	342 / 391
External loop (m^3/h)	567 / 584	567 / 584	576 / 579	576 / 579
Duty Cycle	100%	100%	100%	100%
ELECTRICAL DATA				
Rated Voltage (Volt)	115	230	115	230
Phase	1~	1~	1~	1~
Frequency (Hz)	50/60	50/60	50/60	50/60
Operating Range	+/- 10%	+/- 10%	+/- 10%	+/- 10%
Max power Consumption 50/60Hz L35 L35 (Watt)	810 / 1010	670 / 800	850 / 1040	850 / 1040
Max power Consumption 50/60Hz L35 L50 (Watt)	950 / 1120	780 / 950	990 / 1160	960 / 1170
Max. Nominal Current (Amps)	9.6 / 10.2	4.1 / 5.5	9.6 / 10.2	5.1 / 6.7
Starting Current (Amps)	32 / 34	14 / 18	32 / 34	17 / 22
Pre-fuse T (Amps)	15	15	15	15
Agency Approvals	UL Listed, cUL Listed, EAC, CE			
Power Input Description	Terminal Block			
PERFORMANCE FACTOR (EER), 50Hz, DIN EN 14511				
Cooling Performance L35 / L35	1.60 / 1.37	1.94 / 1.73	2.12 / 1.81	2.12 / 1.81
Cooling Performance L35 / L50	0.95 / 0.89	1.15 / 1.05	1.31 / 1.19	1.35 / 1.18
ENCLOSURE PROTECTION				
IP Code (External loop / Internal loop)	IP34 / IP54	IP34 / IP54	IP34 / IP54	IP34 / IP54
CONTROLLER				
Description	Smart Controller with display			
Controller Location	Ambient Side			
Factory Default Setpoint (°C Controller)	35	35	35	35
Factory Default Setpoint (°F Controller)	80	80	80	80
SOUND LEVEL				
At 1 M (dBA)	71	71	73	73
UNIT CONSTRUCTION				
Material	Steel		Steel	
Finish	RAL 7035		RAL 7035	
UNIT DIMENSIONS				
Height (mm)	950	950	950	950
Width (mm)	400	400	400	400
Depth (mm)	259	259	259	259
Weight (kg)	39	39	43	43

© 2024 nVent

S10 UNIT CHARACTERISTICS (460V)

UNIT	1000W 460V	1500W 460V
CATALOG NUMBER		
Indoor Model without Communications Board (°C Controller)	**S101046G031**	**S101546G031**
Indoor Model with Communications Board (°C Controller)	**S101046G041**	**S101546G041**
Indoor Model without Communications Board (°F Controller)	**S101046G050**	**S101546G050**
Indoor Model with Communications Board (°F Controller)	**S101046G060**	**S101546G060**
COOLING PERFORMANCE		
Total L35 L35, 50Hz, according to DIN EN 14511 (Watt)	1300	1800
Cooling performance L35 L35 (Watt) 50/60Hz	1300 / 1380	1800 / 1880
Cooling performance L35 L50 (Watt) 50/60Hz	900 / 1000	1300 / 1380
Refrigerant	R134a	R134a
Refrigerant Charge (g)	283	510
Max. allowable operating pressure (p. max.) bar	28	28
Operating Temperature Range (Min/Max °C)	10 / 55	10 / 55
Operating Temperature Range (Min/Max °F)	50 / 131	50 / 131
Setting Temperature Range (Min. / Max. °C Controller)	20 / 55	20 / 55
Setting Temperature Range (Min. / Max. °F Controller)	72 / 120	72 / 120
Airflow at 0 Static Pressure:		
Internal loop (m³/h)	350 / 391	342 / 391
External loop (m³/h)	567 / 584	576 / 579
Duty Cycle	100%	100%
ELECTRICAL DATA		
Rated Voltage (Volt)	400 / 460	400 / 460
Phase	1~	3~
Frequency (Hz)	50/60	50/60
Operating Range	+/- 10%	+/- 10%
Max power Consumption 50/60Hz L35 L35 (Watt)	750 / 960	930 / 1130
Max power Consumption 50/60Hz L35 L50 (Watt)	870 / 1090	970 / 1210
Max. Nominal Current (Amps)	2.1 / 2.4	2.1 / 2.4
Starting Current (Amps)	7 / 8	7 / 8
Pre-fuse T (Amps)	15	15
Agency Approvals	UL Listed, cUL Listed, EAC, CE	
Power Input Description	Terminal Block	
PERFORMANCE FACTOR (EER), 50Hz, DIN EN 14511		
Cooling Performance L35 / L35	1.73 / 1.44	1.94 / 1.66
Cooling Performance L35 / L50	1.03 / 0.92	1.34 / 1.14
ENCLOSURE PROTECTION		
IP Code (External loop / Internal loop)	IP34 / IP54	IP34 / IP54
CONTROLLER		
Description	Smart Controller with display	
Controller Location	Ambient Side	
Factory Default Setpoint (°C Controller)	35	35
Factory Default Setpoint (°F Controller)	80	80
SOUND LEVEL		
At 1 M (dBA)	71	73
UNIT CONSTRUCTION		
Material	Steel	Steel
Finish	RAL 7035	RAL 7035
UNIT DIMENSIONS		
Height (mm)	950	950
Width (mm)	400	400
Depth (mm)	259	259
Weight (kg)	45	43

© 2024 nVent

S10 COMPONENTS (1 PHASE)

Item	Model Series	1000W 115V	1000W 230V	1000W 460V	1500W 115V	1500W 230V
	Part Descriptions	**Part Numbers**				
1	Capacitor, Compressor, Run	90235721SP	89107715SP	89107715SP	90235721SP	89107716SP
2	Capacitor, Condenser Blower	52603213SP	52603214SP	52603214SP	52603213SP	52603214SP
3	Capacitor, Evaporator Blower	52603215SP	52603214SP	52603214SP	52603215SP	52603214SP
4	Coil, Condenser	89102610SP	89102610SP	89102610SP	89102610SP	89102610SP
5	Coil, Evaporator	89102609SP	89102609SP	89102609SP	89102609SP	89102609SP
6	Communication Board (optional)	89145457SP	89145457SP	89145457SP	89145457SP	89145457SP
7	Compressor	89111874SP	89107239SP	89107239SP	89111874SP	89105607SP
8	Contactor Compressor	89088986SP	89088986SP	89088986SP	89088986SP	89088986SP
9	Relay, Evaporator Blower	10100536SP	10100536SP	10100536SP	10100536SP	10100536SP
10	Smart Controller °C	90272220SP	90272220SP	90272220SP	90272220SP	90272220SP
	Smart Controller °F	89202719SP	89202719SP	89202719SP	89202719SP	89202719SP
11	Drain Tube Kit (optional)	101027177SP	101027177SP	101027177SP	101027177SP	101027177SP
12	Filter Air, Reusable (optional)	89106977SP	89106977SP	89106977SP	89106977SP	89106977SP
13	Filter/Dryer	52602800SP	52602800SP	52602800SP	52602800SP	52602800SP
14	Impeller, Condenser	89107374SP	89107375SP	89107375SP	89107374SP	89107375SP
15	Impeller, Evaporator	101091121SP	101091122SP	101091122SP	101091121SP	101091122SP
16	Thermal Expansion Valve	89063955SP	10104042SP	10104042SP	89063955SP	10104042SP
17	Thermal Overload, Compressor	90238424SP	89112628SP	89112628SP	90238424SP	NA
18	Thermistor	89075654SP (2)	89075654SP (2)	89075654SP (2)	89075654SP (2)	89075654SP (2)
19	Transformer, 24V	10100694SP	10100693SP	10100693SP	10100694SP	10100693SP
20	Transformer, 230/460V	NA	NA	101006111SP	NA	NA
21	Fuse (Controller)	90596971SP	90596971SP	90596971SP	90596971SP	90596971SP
	Accessories					
22	Installation Kit	90221633QDSP	90221633QDSP	90221633QDSP	90221633QDSP	90221633QDSP
23	Unit Mounting Gasket	90241618SP	90241618SP	90241618SP	90241618SP	90241618SP
24	Mounting standoffs	89105489SP (4)	89105489SP (4)	89105489SP (4)	89105489SP (4)	89105489SP (4)
	Structural Parts					
25	Louvered Grill Panel	89105410SP (2)	89105410SP (2)	89105410SP (2)	89105410SP (2)	89105410SP (2)
26	Controller Bezel Panel	89105411SP	89105411SP	89105411SP	89105411SP	89105411SP
27	Panel Strike Clip (Pkg. 4)	90245472SP	90245472SP	90245472SP	90245472SP	90245472SP
28	Body Catch Clip (Pkg. 4)	89105486SP	89105486SP	89105486SP	89105486SP	89105486SP
29	Body Front Shell	89102598SP	89102598SP	89102598SP	89102598SP	89102598SP

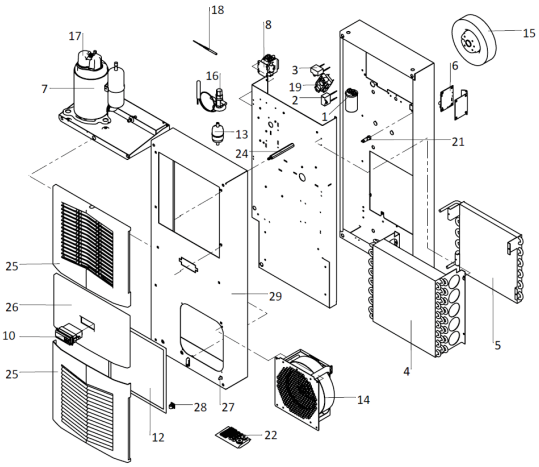

© 2024 nVent

S10 COMPONENTS (3 PHASE)

Item	Model Series	1500W 460V
	Part Descriptions	**Part Numbers**
2	Capacitor, Condenser Blower	52603214SP
3	Capacitor, Evaporator Blower	52603214SP
4	Coil, Condenser	89108399SP
5	Coil, Evaporator	89102609SP
6	Communication Board (optional)	89145457SP
7	Compressor	89107888SP
8	Contactor Compressor	89107296SP
9	Relay, Evaporator Blower	10100536SP
10	Smart Controller °C	90272220SP
	Smart Controller °F	89202719SP
11	Drain Tube Kit (optional)	101027177SP
12	Filter Air, Reusable (optional)	89106977SP
13	Filter/Dryer	52602800SP
14	Impeller, Condenser	89107375SP
15	Impeller, Evaporator	101091122SP
16	Thermal Expansion Valve	89063955SP
17	Thermal Overload, Compressor	90238425SP
18	Thermistor	89075654SP (2)
19	Transformer, 24V	10100693SP
20	Transformer,460/230V	101006128SP
21	Fuse (Controller)	90596971SP
	Accessories	
22	Installation Kit	90221633QDSP
23	Unit Mounting Gasket	90241618SP
24	Mounting standoffs	89105489SP (4)
	Structural Parts	
25	Louvered Grill Panel	89105410SP (2)
26	Controller Bezel Panel	89105411SP
27	Panel Strike Clip (Pkg. 4)	90245472SP
28	Body Catch Clip (Pkg. 4)	89105486SP
29	Body Front Shell	89102598SP
30	Relay, Overload	89098326SP
31	Relay, Phase Monitor	89097986SP

© 2024 nVent

S16 MODELS 2000/2500W

S16 SCHEMATICS

2000W 230V

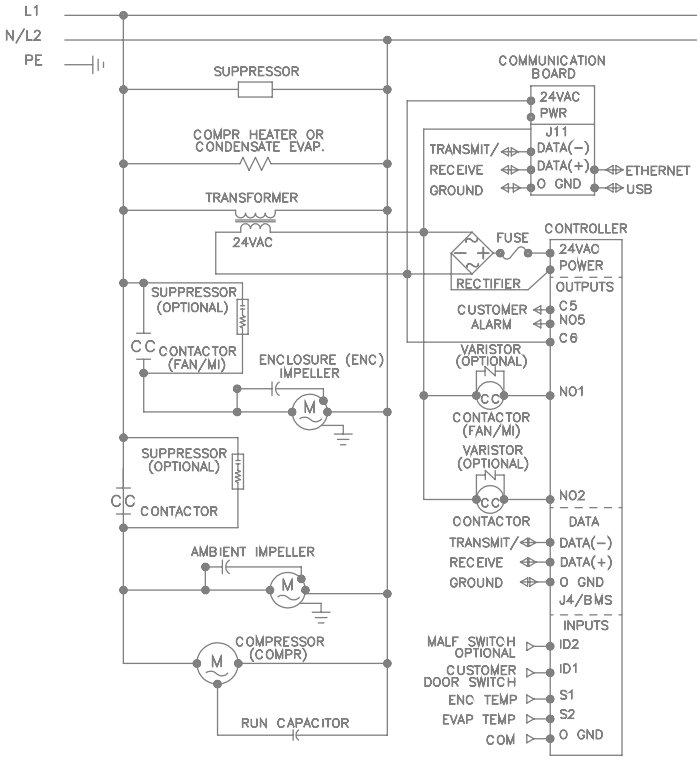

2000W 460V

© 2024 nVent

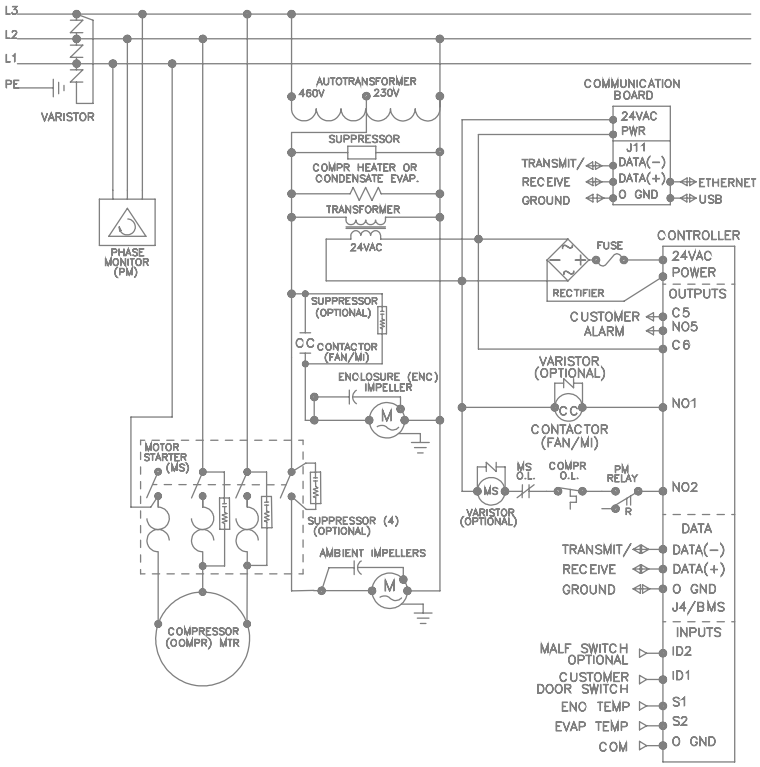

89107589 REV. J ELECTRICAL SCHEMATIC

© 2024 nVent

2500W 230V

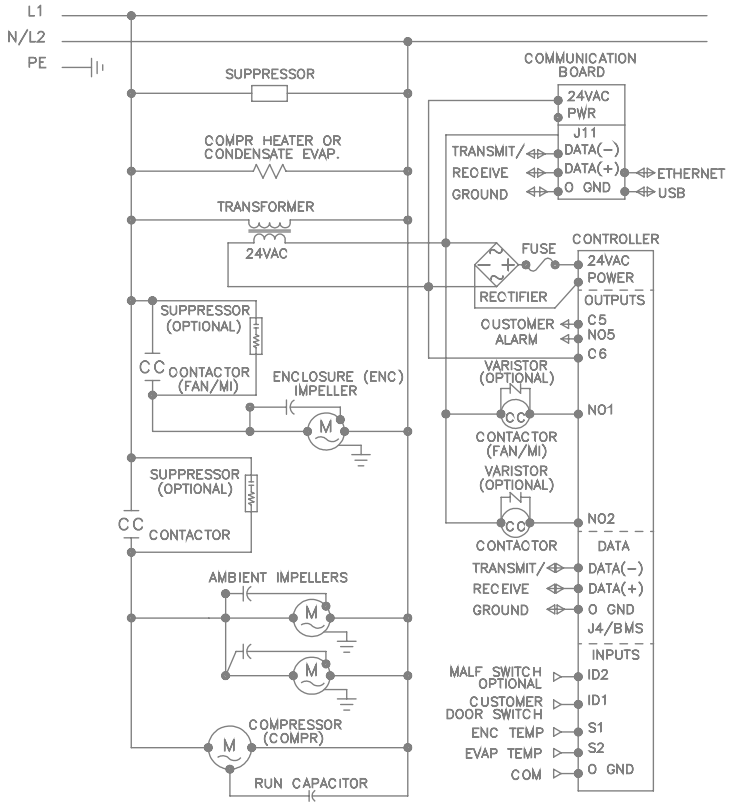

89107591 REV. I ELECTRICAL SCHEMATIC

2500W 460V

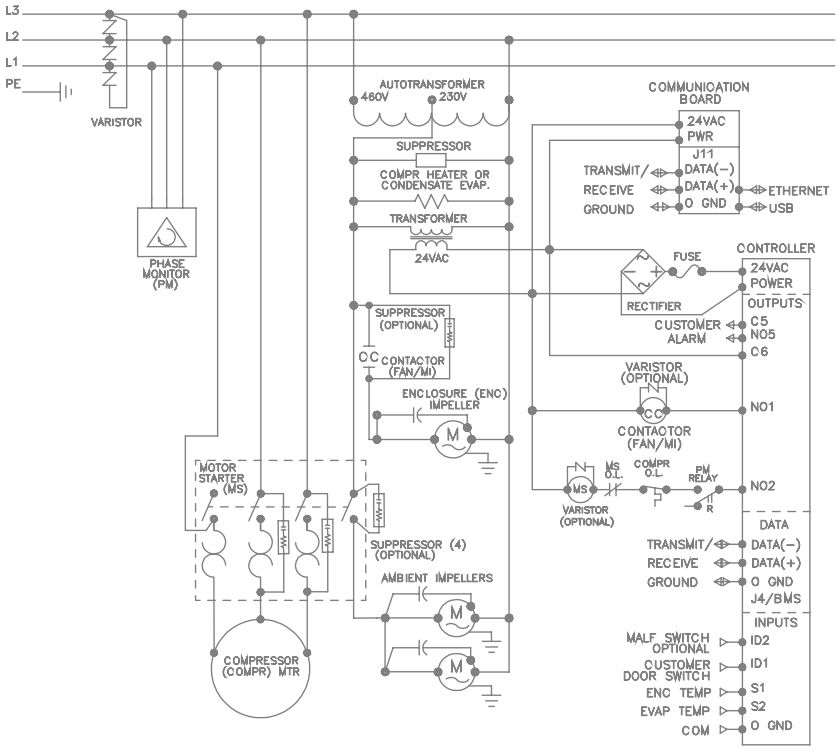

89107593 REV. J ELECTRICAL SCHEMATIC

© 2024 nVent

4000W 460V

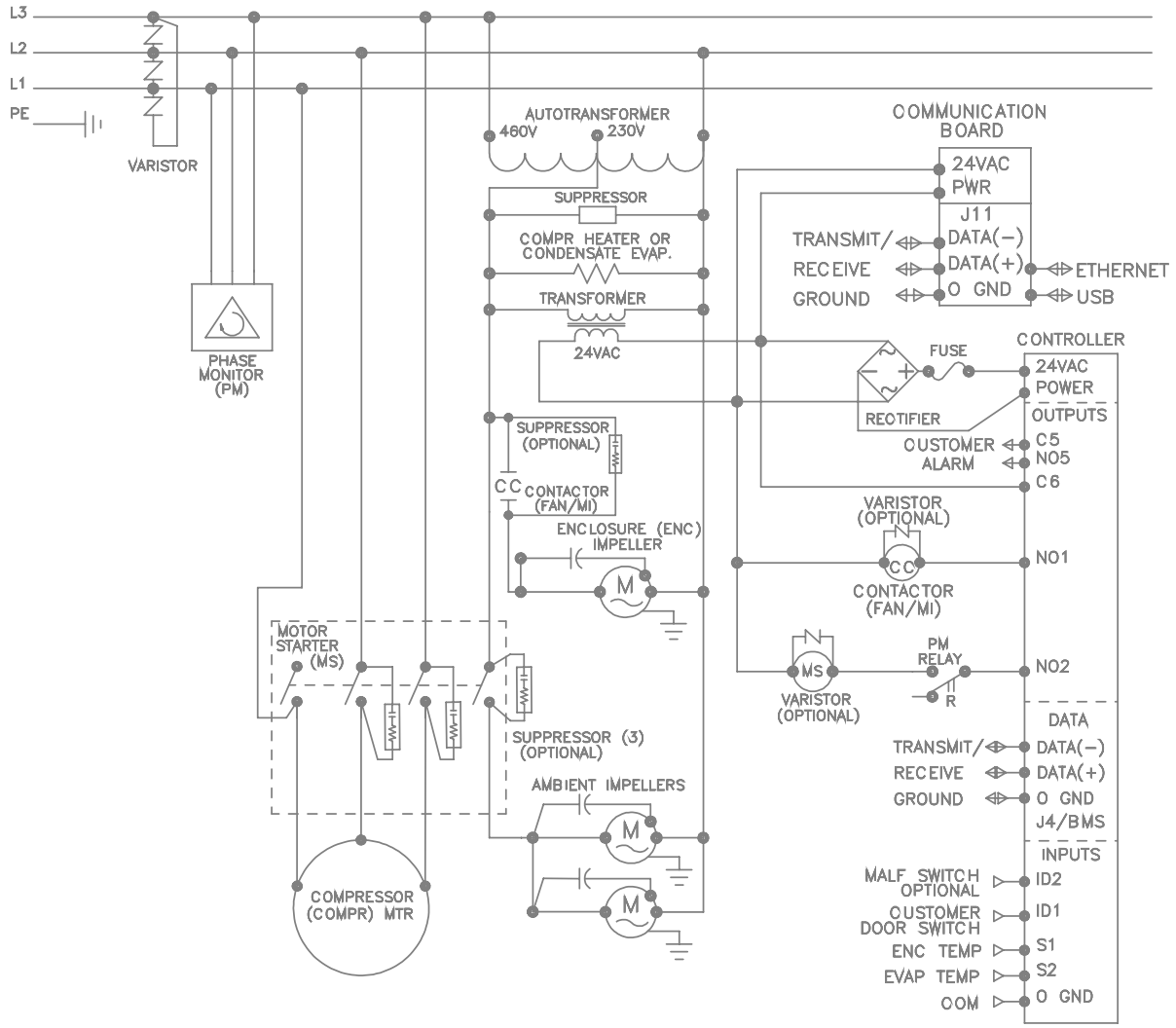

ELECTRICAL SCHEMATIC

89107595 REV. I

© 2024 nVent

S16 WIRE DIAGRAMS

2000W 230V

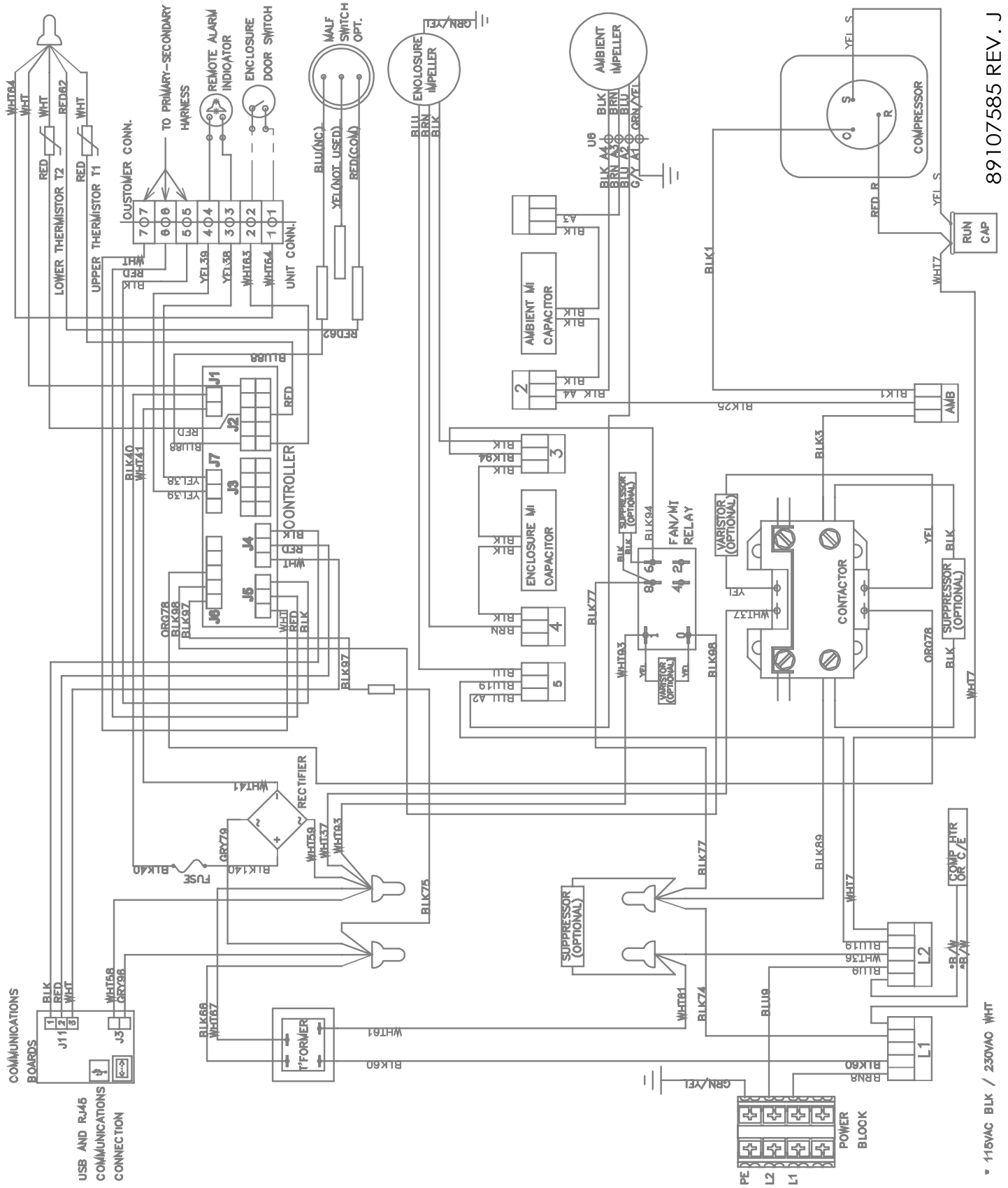

© 2024 nVent

2000W 460V

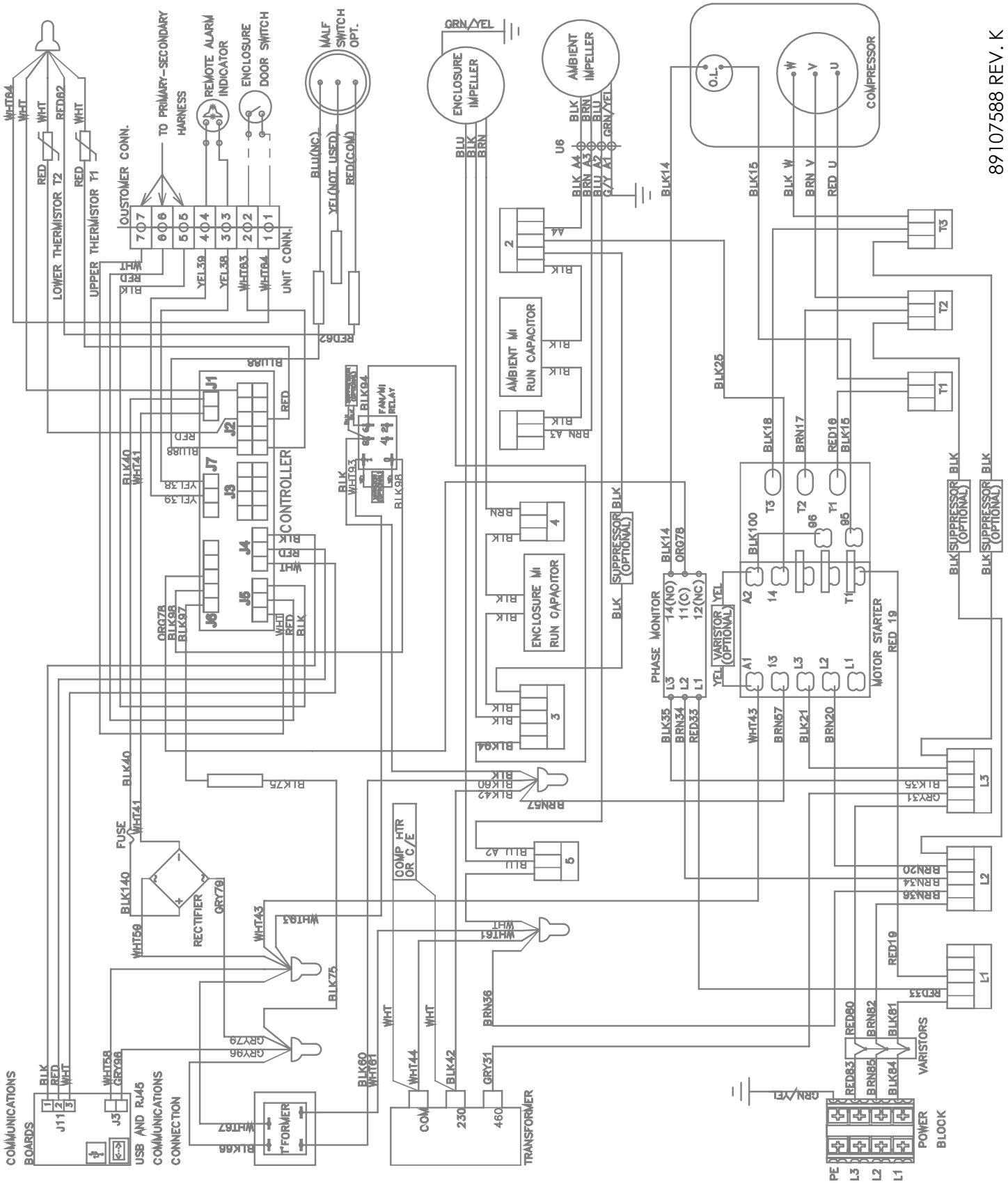

© 2024 nVent

2500W 230V

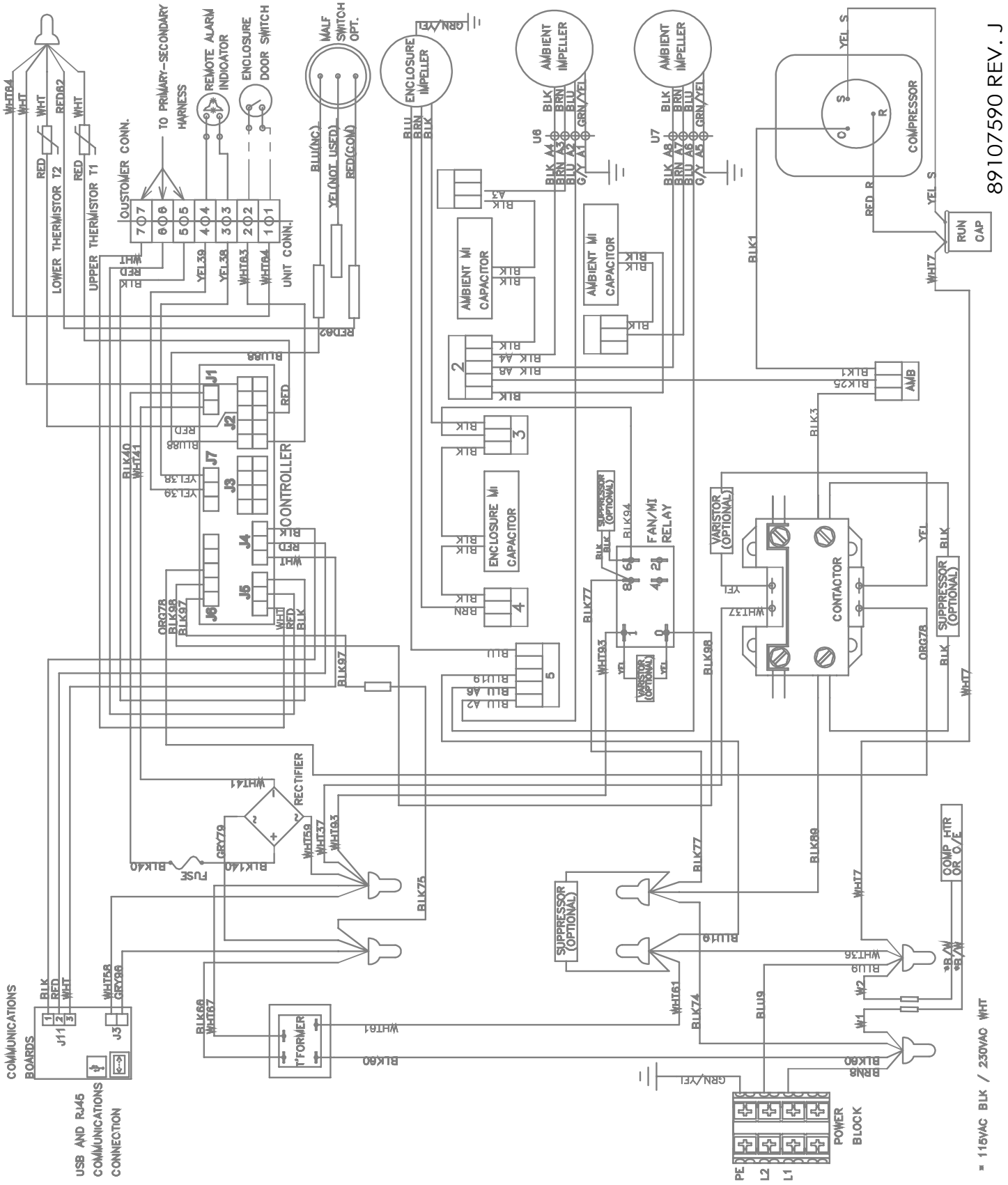

© 2024 nVent

2500W 460V

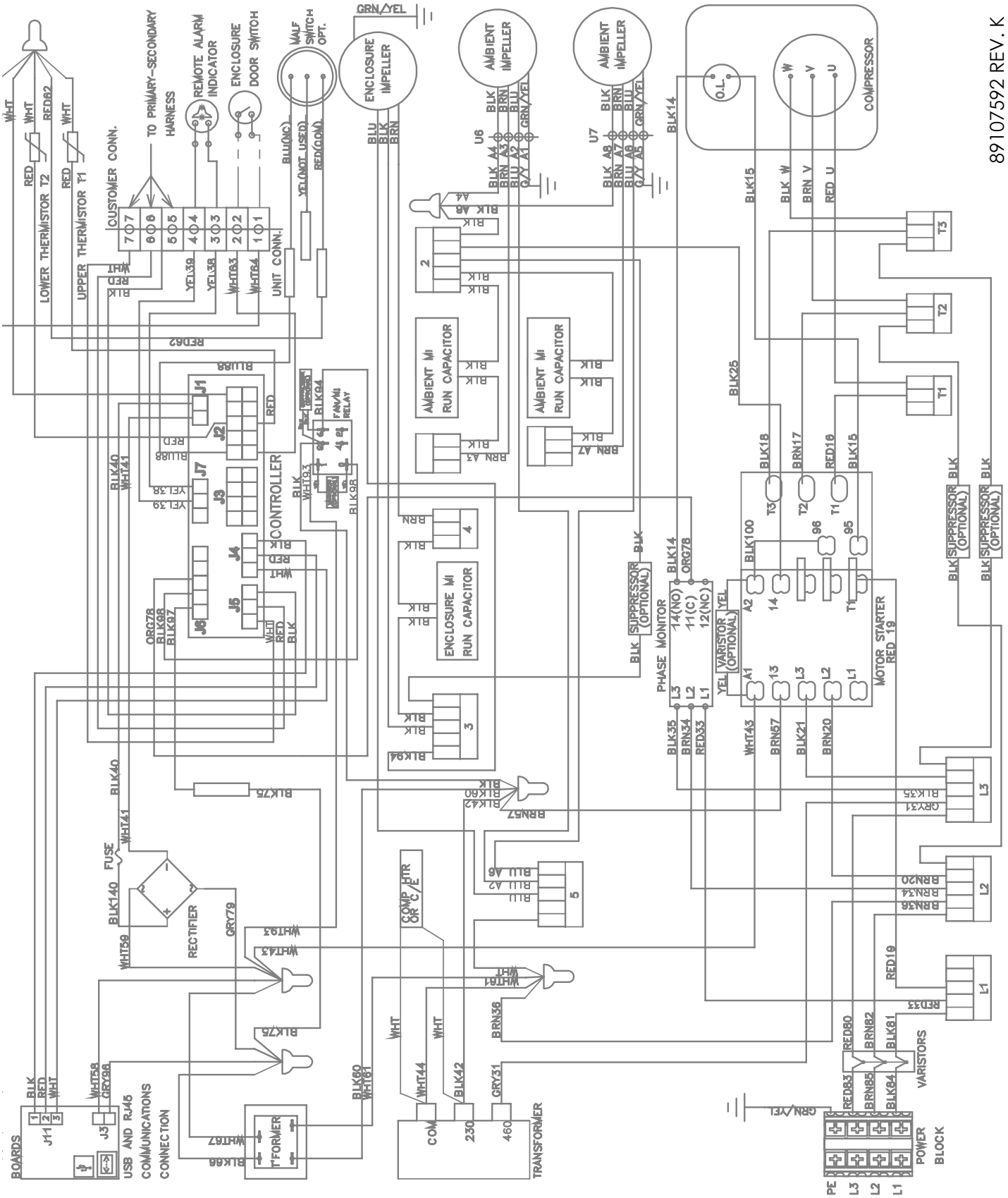

© 2024 nVent

4000W 460V

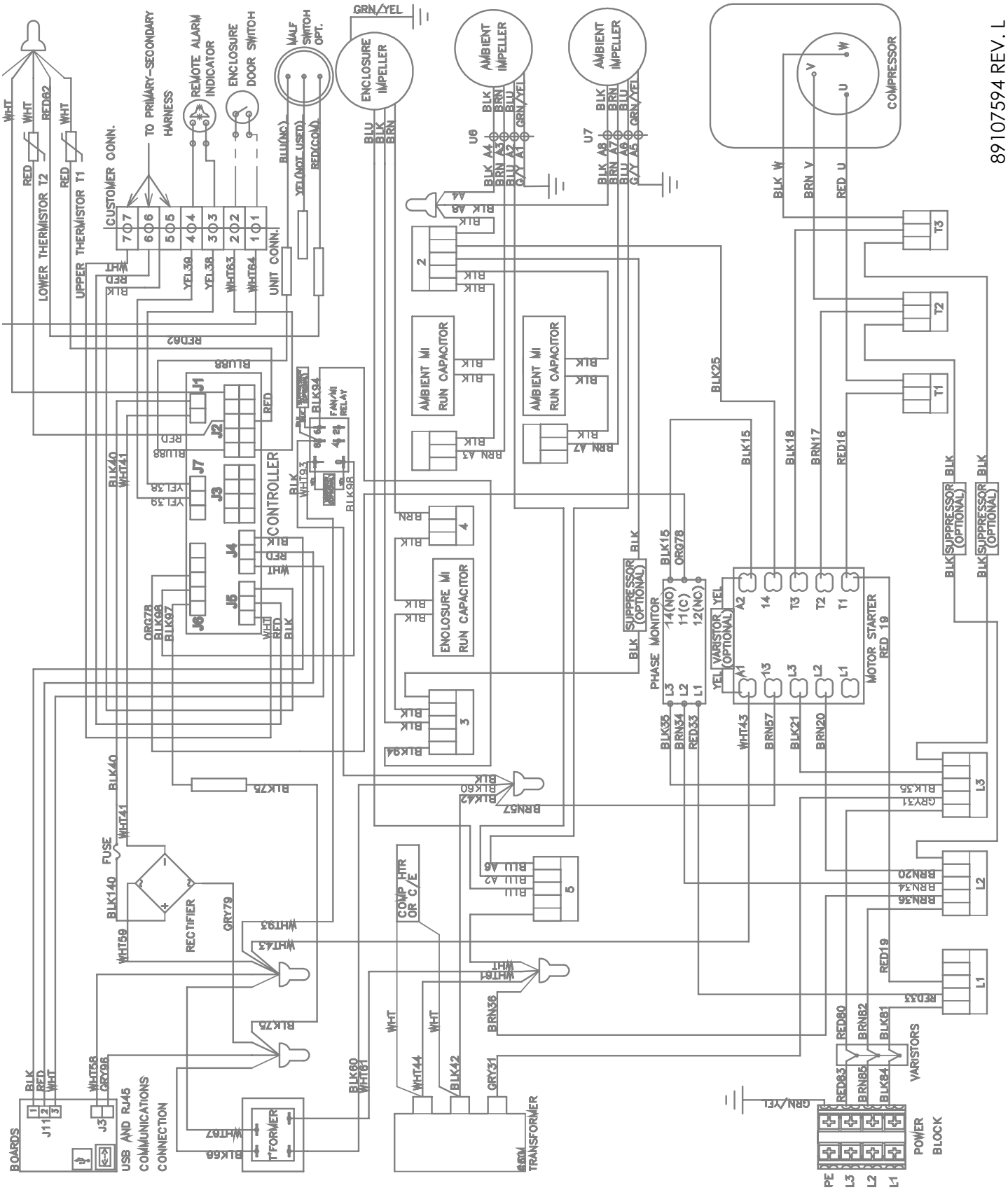

© 2024 nVent

S16 DIMENSIONAL DRAWING

2000/2500W

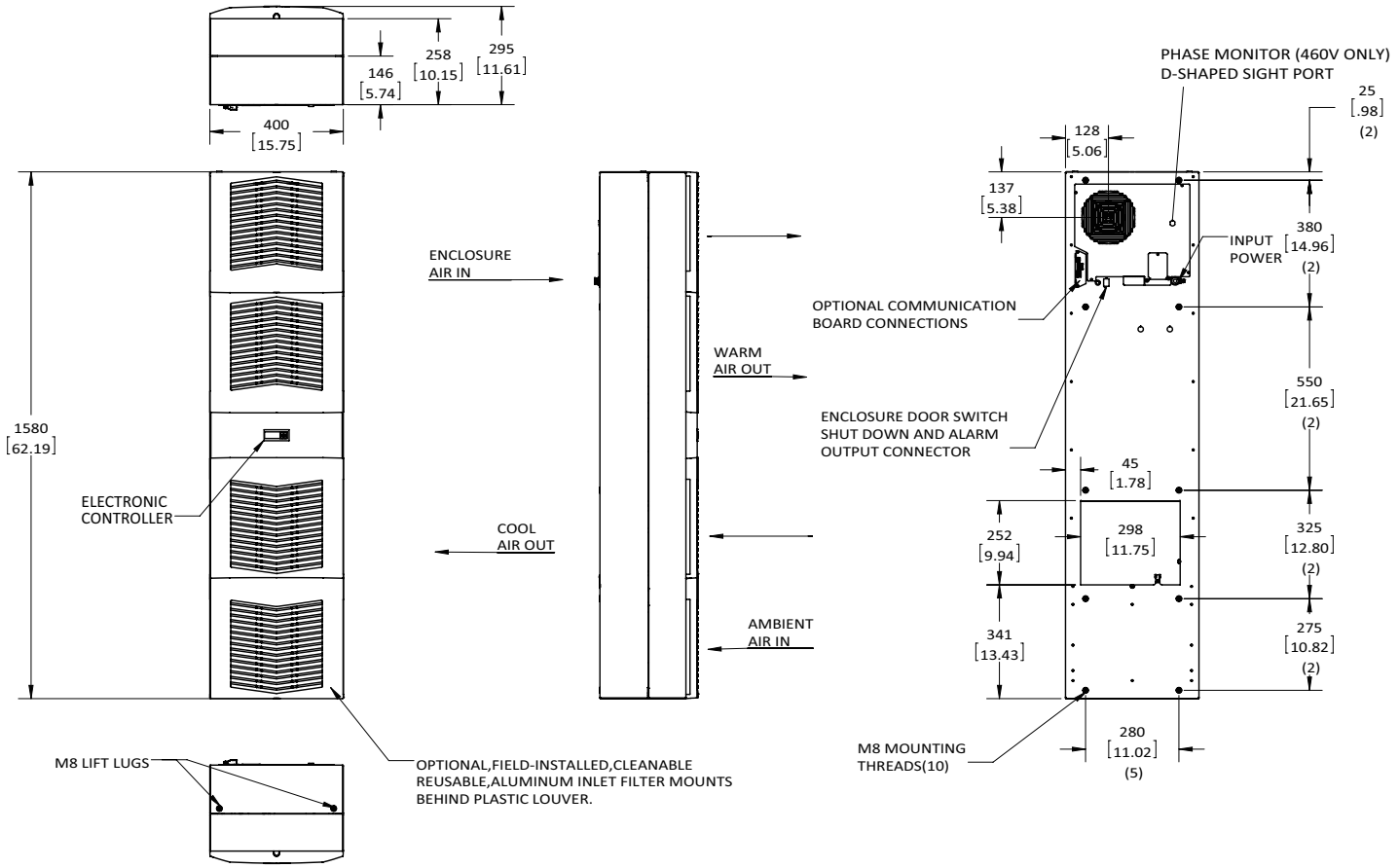

© 2024 nVent

4000W

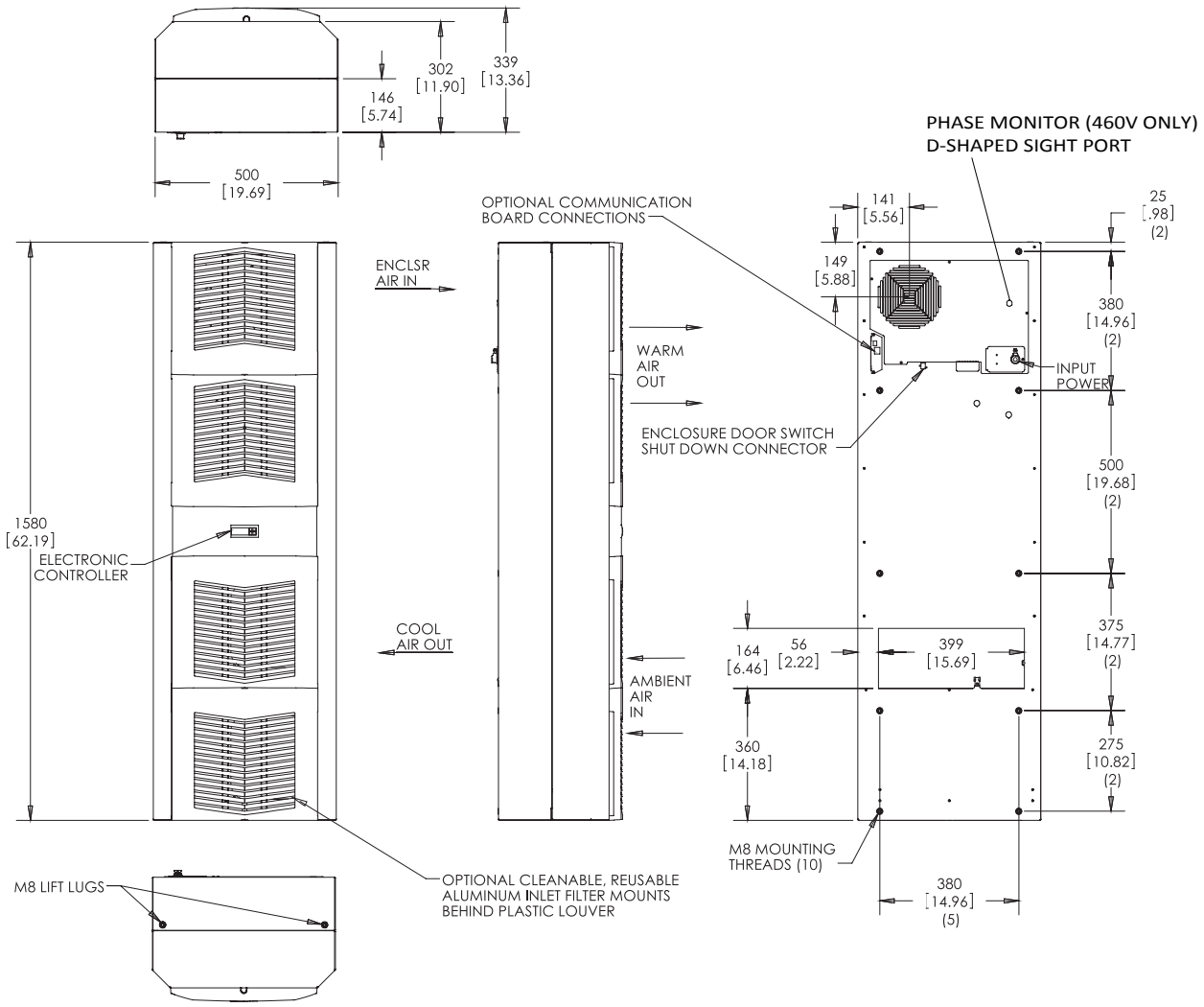

© 2024 nVent

S16 INSTALLATION INSTRUCTION

1. See Receiving The Air Conditioner and Handling and Testing The Air Conditioner on page 9.
2. Using the cutout template provided with the unit, prepare the enclosure. See Figure 10 and Figure 11. The front of the unit requires a half meter clearance for proper airflow. Five centimeters is required on each side of the unit. To avoid condensate overflow, unit must be mounted within 3° of level.
3. Refer to mounting instructions on page 11.
4. Adjust controller to desired cabinet temperature. Refer to Displaying And Changing Program Settings on page 16 for controller adjustment and operation.

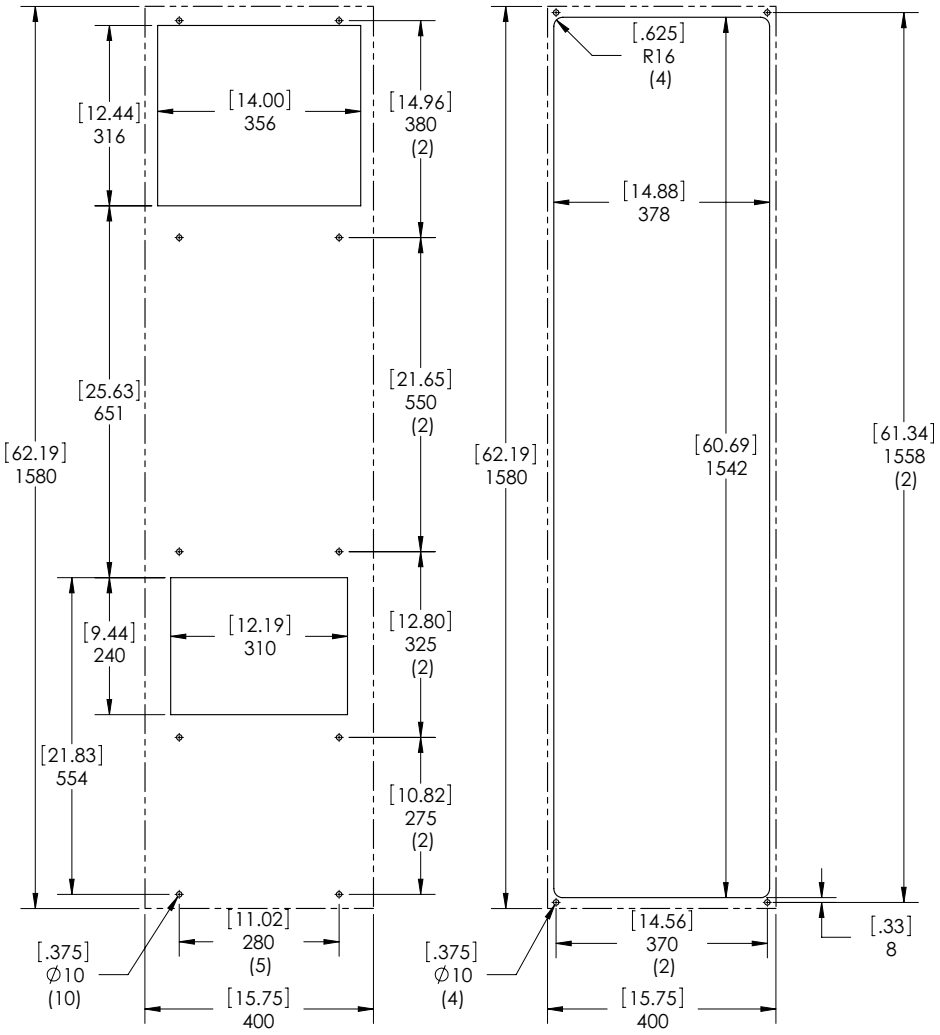

Surface Mount

Partial and Full Recess Mount

Figure 10
S16 2000/2500W Cutout Drawing
Dashed Lines Represent The Air Conditioner

© 2024 nVent

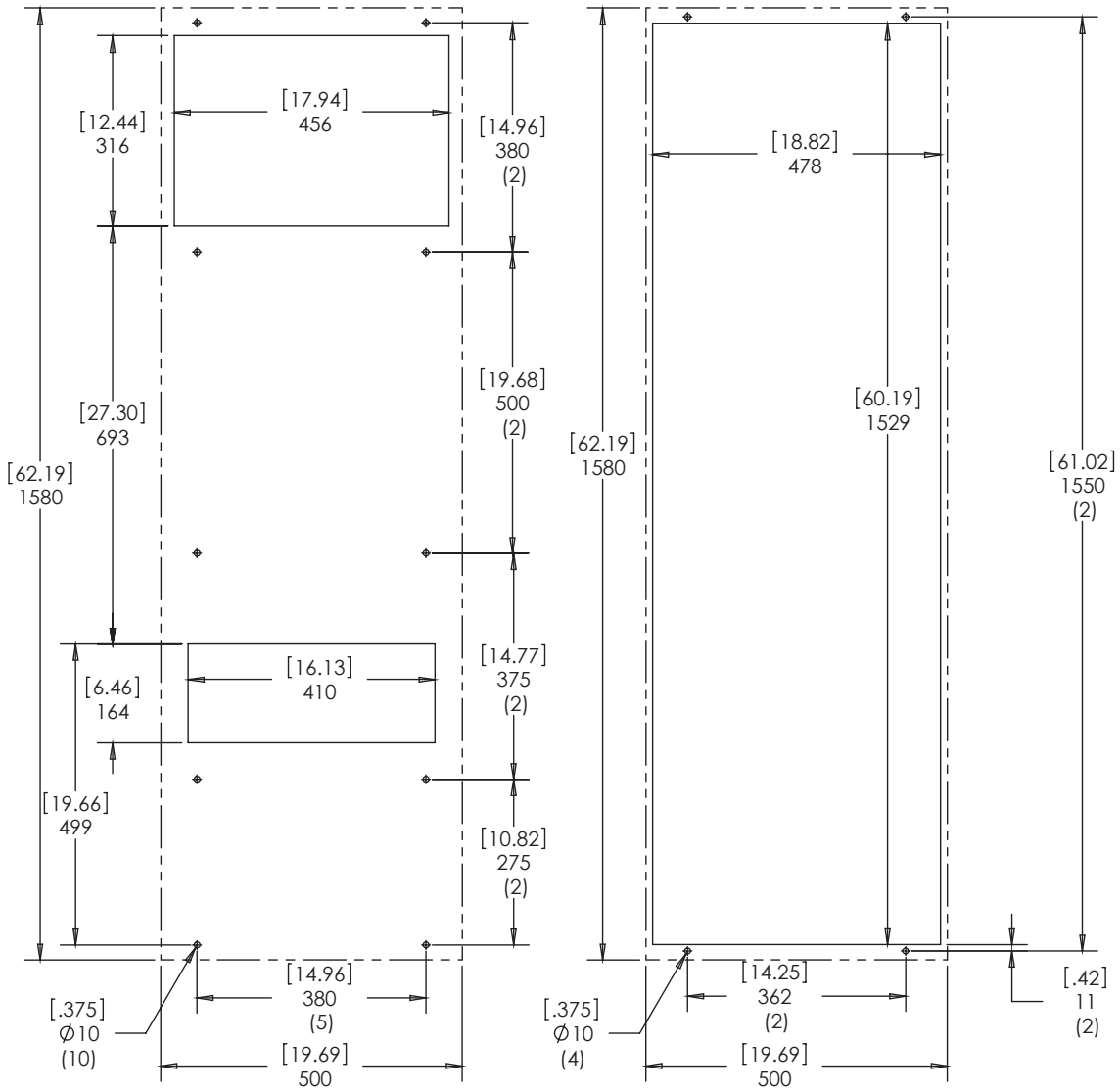

Surface Mount

Partial Recess Mount

Figure 11
S16 4000W Cutout Drawing
Dashed Lines Represent The Air Conditioner

© 2024 nVent

S16 UNIT CHARACTERISTICS (230V)

UNIT	2000W 230V	2500W 230V
CATALOG NUMBER		
Indoor Model without Communications Board (°C Controller)	**S162026G031**	**S162526G031**
Indoor Model with Communications Board (°C Controller)	**S162026G041**	**S162526G041**
Indoor Model without Communications Board (°F Controller)	**S162026G050**	**S162526G050**
Indoor Model with Communications Board (°F Controller)	**S162026G060**	**S162526G060**
COOLING PERFORMANCE		
Total L35 L35, 50Hz, according to DIN EN 14511 (Watt)	2200	2680
Cooling performance L35 L35 (Watt) 50/60Hz	2200 / 2400	2680 / 2800
Cooling performance L35 L50 (Watt) 50/60Hz	1820 / 1900	2200 / 2300
Refrigerant	R134a	R134a
Refrigerant Charge (g)	709	737
Max. allowable operating pressure (p. max.) bar	28	28
Operating Temperature Range (Min/Max °C)	10 / 55	10 / 55
Operating Temperature Range (Min/Max °F)	50 / 131	50 / 131
Setting Temperature Range (Min. / Max. °C Controller)	20 / 55	20 / 55
Setting Temperature Range (Min. / Max. °F Controller)	72 / 120	72 / 120
Airflow at 0 Static Pressure:		
Internal loop (m^3/h)	454 / 484	447 / 466
External loop (m^3/h)	634 / 654	1104 / 1143
Duty Cycle	100%	100%
ELECTRICAL DATA		
Rated Voltage (Volt)	230	230
Phase	1~	1~
Frequency (Hz)	50/60	50/60
Operating Range	+/- 10%	+/- 10%
Max power Consumption 50/60Hz L35 L35 (Watt)	940 / 1140	1320 / 1650
Max power Consumption 50/60Hz L35 L50 (Watt)	1070 / 1320	1500 / 1910
Max. Nominal Current (Amps)	5.7 / 7.2	8.0 / 10.1
Starting Current (Amps)	19 / 24	26 / 33
Pre-fuse T (Amps)	15	15
Agency Approvals	UL Listed, cUL Listed, EAC, CE	
Power Input Description	Terminal Block	
PERFORMANCE FACTOR (EER), 50Hz, DIN EN 14511		
Cooling Performance L35 / L35	2.34 / 2.11	2.03 / 1.70
Cooling Performance L35 / L50	1.70 / 1.44	1.47 / 1.20
ENCLOSURE PROTECTION		
IP Code (External loop / Internal loop)	IP34 / IP54	IP34 / IP54
CONTROLLER		
Description	Smart controller with display	
Controller Location	Ambient Side	
Factory Default Setpoint (°C Controller)	35	35
Factory Default Setpoint (°F Controller)	80	80
SOUND LEVEL		
At 1 M (dBA)	70	72
UNIT CONSTRUCTION		
Material		
Finish		
UNIT DIMENSIONS		
Height (mm)	1580	1580
Width (mm)	400	400
Depth (mm)	295	295
Weight (kg)	68	70

© 2024 nVent

S16 UNIT CHARACTERISTICS (460V)

UNIT	2000W 460V	2500W 460V	4000W 460V
CATALOG NUMBER			
Indoor Model without Communications Board (°C Controller)	**S162046G031**	**S162546G031**	**S164046G031**
Indoor Model with Communications Board (°C Controller)	**S162046G041**	**S162546G041**	**S164046G041**
Indoor Model without Communications Board (°F Controller)	**S162046G050**	**S162546G050**	**S164046G050**
Indoor Model with Communications Board (°F Controller)	**S162046G060**	**S162546G060**	**S164046G060**
COOLING PERFORMANCE			
Total L35 L35, 50Hz, according to DIN EN 14511 (Watt)	2200	2680	4000
Cooling performance L35 L35 (Watt) 50/60Hz	2200 / 2400	2680 / 2800	4000 / 4500
Cooling performance L35 L50 (Watt) 50/60Hz	1820 / 1900	2200 / 2300	3050 / 3450
Refrigerant	R134a	R134a	R134a
Refrigerant Charge (g)	709	850	1247
Max. allowable operating pressure (p. max.) bar	28	28	28
Operating Temperature Range (Min/Max °C)	10 / 55	10 / 55	10 / 55
Operating Temperature Range (Min/Max °F)	50 / 131	50 / 131	50 / 131
Setting Temperature Range (Min. / Max. °C Controller)	20 / 55	20 / 55	20 / 55
Setting Temperature Range (Min. / Max. °F Controller)	72 / 120	72 / 120	72 / 120
Airflow at 0 Static Pressure:			
Internal loop (m^3/h)	454 / 484	447 / 466	494 / 576
External loop (m^3/h)	634 / 654	1104 / 1143	1070 / 1184
Duty Cycle	100%	100%	100%
ELECTRICAL DATA			
Rated Voltage (Volt)	400 / 460	400 / 460	400 / 460
Phase	3~	3~	3~
Frequency (Hz)	50/60	50/60	50/60
Operating Range	+/- 10%	+/- 10%	+/- 10%
Max power Consumption 50/60Hz L35 L35 (Watt)	900 / 1180	1150 / 1510	1790 / 2310
Max power Consumption 50/60Hz L35 L50 (Watt)	1060 / 1340	1330 / 1770	1850 / 2430
Max. Nominal Current (Amps)	2.2 / 2.6	3.2 / 3.4	4.2 / 4.4
Starting Current (Amps)	7 / 9	11 / 11	14 / 15
Pre-fuse T (Amps)	15	15	15
Agency Approvals	UL-listed, cUL-listed, EAC, CE		
Power Input Description	Terminal Block		
PERFORMANCE FACTOR (EER), 50Hz, DIN EN 14511			
Cooling Performance L35 / L35	2.44 / 2.03	2.33 / 1.85	2.23 / 1.95
Cooling Performance L35 / L50	1.72 / 1.42	1.65 / 1.30	1.65 / 1.42
ENCLOSURE PROTECTION			
IP Code (External loop / Internal loop)	IP34 / IP54	IP34 / IP54	IP34 / IP54
CONTROLLER			
Description	Smart controller with display		
Controller Location	Ambient side		
Factory Default Setpoint (°C Controller)	35	35	35
Factory Default Setpoint (°F Controller)	80	80	80
SOUND LEVEL			
At 1 M (dBA)	70	72	72
UNIT CONSTRUCTION			
Material	Steel		
Finish	RAL 7035		
UNIT DIMENSIONS			
Height (mm)	1580	1580	1580
Width (mm)	400	400	500
Depth (mm)	295	295	340
Weight (kg)	68	70	92

© 2024 nVent

S16 COMPONENTS (230V)

Item	Model Series	2000W 230V	2500W 230V
	Part Descriptions	**Part Numbers**	
1	Capacitor, Compressor, Run	89107716SP	89107712SP
2	Capacitor, Compressor, Start	NA	NA
3	Capacitor, Condenser Blower	52603214SP	52603214SP (2)
4	Capacitor, Evaporator Blower	52603214SP	52603214SP
5	Coil, Condenser	89107341SP	89107341SP
6	Coil, Evaporator	89110233SP	89110233SP
7	Communication Board (optional)	89145457SP	89145457SP
8	Compressor	89107887SP	89107889SP
9	Contactor Compressor	89088986SP	89088986SP
10	Relay, Evaporator Blower	10100536SP	10100536SP
11	Smart Controller °C	90272220SP	90272220SP
	Smart Controller °F	89202719SP	89202719SP
12	Drain Tube Kit (optional)	101027177SP	101027177SP
13	Filter Air, Reusable (optional)	89106977SP	89106977SP (2)
14	Filter/Dryer	52602800SP	52602800SP
15	Impeller, Condenser	89107375SP	89107375SP (2)
16	Impeller, Evaporator	101091124SP	101091124SP
17	Relay, Compressor Start	NA	NA
18	Thermal Expansion Valve	10104038SP	10104038SP
19	Thermal Overload, Compressor	NA	NA
20	Thermistor	89075654SP (2)	89075654SP (2)
21	Transformer, 24V	10100693SP	10100693SP
22	Fuse (Controller)	90596971SP	90596971SP
	Accessories		
23	Installation Kit	90221632QDSP	90221632QDSP
24	Unit Mounting Gasket	90241619SP	90241619SP
25	Mounting standoffs	89105490SP (4)	89105490SP (4)
	Structural Parts		
26	Louvered Grill Panel	89105410SP (4)	89105410SP (4)
27	Controller Bezel Panel	89105411SP	89105411SP
28	Panel Strike Clip (Pkg. 4)	90245472SP	90245472SP
29	Body Catch Clip (Pkg. 4)	89105486SP	89105486SP
30	Body Front Shell	89107454SP	89102801SP

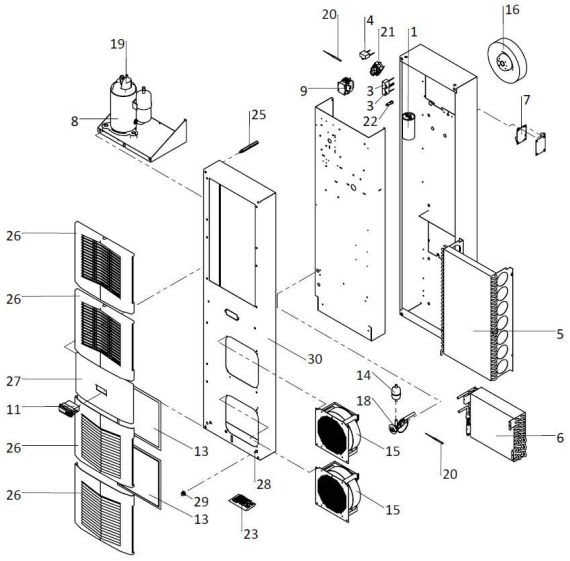

© 2024 nVent

S16 COMPONENTS (460V)

Item	Model Series	2000W 460V	2500W 460V	4000W 460V
	Part Descriptions	**Part Numbers**		
3	Capacitor, Condenser Blower	52603214SP	52603214SP (2)	52603214SP (2)
4	Capacitor, Evaporator Blower	52603214SP	52603214SP	52603220SP
5	Coil, Condenser	89107341SP	89107341SP	89108064SP
6	Coil, Evaporator	89110233SP	89110233SP	89115695SP
7	Communication Board (optional)	89145457SP	89145457SP	89145457SP
8	Compressor	89107888SP	89107890SP	89107934SP
9	Contactor Compressor	89107296SP	89107296SP	89107296SP
10	Relay, Evaporator Blower	10100536SP	10100536SP	10100536SP
11	Smart Controller °C	90272220SP	90272220SP	90272220SP
	Smart Controller °F	89202719SP	89202719SP	89202719SP
12	Drain Tube Kit (optional)	101027177SP	101027177SP	101027177SP
13	Filter Air, Reusable (optional)	89106977SP	89106977SP (2)	89106977SP (2)
14	Filter/Dryer	52602800SP	52602800SP	52602806SP
15	Impeller, Condenser	89107375SP	89107375SP (2)	89107375SP (2)
16	Impeller, Evaporator	101091124SP	101091124SP	101091139SP
17	Relay, Overload	89098323SP	89098326SP	NA
18	Thermal Expansion Valve	89117868SP	10104038SP	89114096SP
19	Thermal Overload, Compressor	90238425SP	90238425SP	NA
20	Thermistor	89075654SP (2)	89075654SP (2)	89075654SP (2)
21	Transformer, 24V	10100693SP	10100693SP	10100693SP
22	Fuse (Controller)	90596971SP	90596971SP	90596971SP
	Accessories			
23	Installation Kit	90221632QDSP	90221632QDSP	90221632QDSP
24	Unit Mounting Gasket	90241619SP	90241619SP	90241620SP
25	Mounting standoffs	89105490SP (4)	89105490SP (4)	89105491SP (4)
	Structural Parts			
26	Louvered Grill Panel	89105410SP (4)	89105410SP (4)	89105410SP (4)
27	Controller Bezel Panel	89105411SP	89105411SP	89105411SP
28	Panel Strike Clip (Pkg. 4)	90245472SP	90245472SP	90245472SP
29	Body Catch Clip (Pkg. 4)	89105486SP	89105486SP	89105486SP
30	Body Front Shell	89107454SP	89102801SP	89104006SP
31	Transformer,460/230V	101006128SP	101006128SP	101006128SP
32	Relay, Phase Monitor	89097986SP	89097986SP	89097986SP

© 2024 nVent

MAINTENANCE

COMPRESSOR

The compressor requires no maintenance. It is hermetically sealed, properly lubricated at the factory and should provide years of satisfactory operating service.

INLET AIR FILTER (FIELD INSTALLED OPTION)

This air conditioner was designed with a dust resistant condenser coil. This allows it to be run filterless in most applications. Should you decide the filter is necessary in your application, regular maintenance to clean this filter will assure normal operation of the air conditioner. The easily removable inlet air filter is located behind the louvered grille. If necessary filter maintenance is delayed or ignored, the maximum ambient temperatures under which the unit is designed to operate will be decreased.

If the compressor's operating temperature increases above designed conditions due to a dirty or clogged filter (or plugged condenser coil), the air conditioner's compressor will stop operating due to actuation of the thermal overload cut-out switch located on the compressor housing. As soon as the compressor temperature has dropped to within the switch's cut-in setting, the compressor will restart automatically. However the above condition will continue to take place until the filter or coil has been cleaned. It is recommended that power to the air conditioner be interrupted intentionally when abnormally high compressor operating temperature causes automatic shut-down of the unit. The above described shut-down is symptomatic of a clogged or dirty filter or condenser coil, thus causing a reduction in cooling air flow across the surface of the compressor and condenser coil.

HOW TO REMOVE, CLEAN OR INSTALL AN OPTIONAL INLET AIR FILTER

Aluminum washable air filters are designed to provide excellent filtering efficiency with a high dust holding capacity and a minimum amount of resistance to air flow. Because they are constructed entirely of aluminum they are lightweight and easy to service. To achieve maximum performance from your air handling equipment, air filters should be cleaned on a regular basis.

The inlet air filter is located behind the front louvered grille. To access the filter, pull the filter up and out of retaining tabs in the bottom of the front louvered grille. The filter may now be cleaned or a new filter installed.

Cleaning Instructions:

1. Flush the filter with warm water from the exhaust side to the intake side. DO NOT USE CAUSTICS.
2. After flushing, allow filter to drain. Placing it with a corner down will assure complete drainage.

CONDENSER AND EVAPORATOR AIR MOVERS

Impeller motors require no maintenance. All bearings, shafts, etc. are lubricated during manufacturing for the life of the motor.

If one of the condenser impeller motors (ambient impellers) should fail, it is not necessary to remove the air conditioner from the cabinet or enclosure to replace the blower. The condenser blower is mounted on its own bracket and is easily accessible by removing the louvered grille.

⚠ CAUTION

Operation of the air conditioner in areas containing airborne caustics or chemicals can rapidly deteriorate filters, condenser coils, blowers and motors, etc. Contact nVent Equipment Protection for special recommendations.

© 2024 nVent

MAINTENANCE / INSPECTION RECOMMENDATIONS (Perform on a biannual basis - more frequently as required by the operating environment)		
Status √ or x	**Check Point**	**Description**
	Operational Inspection	Run unit through all modes of operations and record temperatures, voltages, amperes.
	Visual Inspection	Visually inspect unit for damage, cleanliness, missing, loose and/or broken parts.
	Filter Maintenance	Inspect, clean and replace filter as necessary.
	Clean Unit	Inspect and clean coils, fans/blowers, louvers, air inlets/ outlets, interior and exterior of unit as required.
	Controller Cycle Sequence	Cycle the controller through all modes of operation to ensure proper cycling and temperature setpoint operation. Adjust to proper setting (typically 25°C-30°C).
	Air Flow and Circulation	Inspect air conditioning unit, cabinet and surrounding area to ensure adequate airflow to and from the unit on both the inlet and outlet air channels for the ambient air and cabinet air.
	Seals, Gaskets and Leaks	Inspect and repair the seals, gaskets and access holes around the unit and/or cabinet that show signs of leaking air and/or moisture.
	Condensate and Drains	Inspect and clean the condensate pans and drains to ensure proper drainage and dissipation of moisture.
	Electrical/Wiring	Inspect for loose, damaged, corroded or chaffing wiring and connections. Tighten, insulate or tie-up wires as required.
	Options and Accessories	Check operation and functionality of optional and accessory items such as digital display/controller, door switches, alarm switches, air baffles/deflectors, etc.
	Refrigeration System	Inspect refrigeration tubing/lines for signs of leaks, rubbing, corrosion or damage. Check the compressor for proper operation, mounting and visible signs of exposure to high heat.
	Maintenance Records	Update maintenance records on the unit and in the management system.

© 2024 nVent

BASIC AIR CONDITIONING TROUBLE SHOOTING CHECK LIST - REMOTE ACCESS CONTROL VERSION

1. Check manufacturer's nameplate located on the unit for correct power supply.
2. Turn on power to the unit. The controller will display a start up sequence then revert to the normal temperature display mode. Is the correct enclosure temperature displayed?

   Note: The temperature may be alternating with an alarm code.

YES, proceed to step 3.		
NO, possible problem: » Open controller fuse » Controller in alarm condition. See View Alarms on page 18. » Defective controller » Defective thermistor - check by blowing warm air across the thermistor. If display temperature rises, thermistor is operable.	→	**Replace part**

3. The cooling status indication (symbol G) should be on. Is the symbol on? If not, press and hold the lower right snowflake button for greater than five seconds. Is the cooling mode symbol now on?

YES, proceed to step 4.		
NO, possible problem: » Defective controller	→	**Replace part**

4. The evaporator (Enclosure or COLD air) fan/impeller should turn on. Is there airflow?

YES, proceed to step 5.		
NO, possible problem: » Controller in alarm condition. See View Alarms on page 18. » Open motor winding » Stuck fan/impeller » Obstructed blades/wheel » Defective motor capacitor	→	**Repair or Replace defective part**

5. Start the cooling cycle by changing the cooling setpoint parameter (r01) to the low limit of 20°C. Symbol 1 should be displayed indicating a call for cooling. If symbol 1 is flashing, the unit is in Restart Time Delay mode. Within 6 minutes, symbol 1 should display without flashing. Is symbol 1 displayed without flashing?

YES, proceed to step 7.		
NO, possible problem: » Unit still in Recycle Time Delay mode » Enclosure temperature below cooling setpoint temperature	→	**Wait and/or heat enclosure thermistor T1**

6. The compressor and the condenser (Ambient or HOT air) impeller(s) should turn on. Is there adequate airflow?

YES, proceed to step 8.		
NO, possible problem: » Open motor winding(s) » Stuck impeller(s) » Obstructed wheel(s) » Defective motor capacitor(s)	→	**Repair or Replace defective part**

© 2024 nVent

7. Carefully check the compressor for proper operation - motor should cause slight vibration and the outer case of the compressor should be warm. Is the compressor showing signs of this?

YES, wait 5 minutes, proceed to step 9.
NO, possible problem: » Defective start or run capacitor » Defective overload » Defective start relay » Defective contactor » Defective compressor

8. Make sure the coils are clean then check the evaporator air in and air out temperatures. If the temperatures are the same:

» Possible loss of refrigerant » Possible bad valves in compressor

BASIC AIR CONDITIONING TROUBLE SHOOTING CHECKLIST

SYMPTOM	POSSIBLE CAUSE
Unit won't cool	Clogged fins on coil(s)
	Dirty filter
	Impeller(s) not running
	Compressor not running
	Compressor runs, but has bad valves
	Loss of refrigerant
Compressor tries to start but won't run	Low line voltage at start. Should be +/-10% rated voltage.
	Compressor motor stuck
	Bad contactor
	Bad overload switch
	Bad run/start capacitor
Unit blows breakers	Undersized breaker/fuse or not time delayed
	Short in system
Getting water in enclosure	Drain plugged
	Drain tube kinked
	Enclosure not sealed (allowing humidity in)
	Mounting gasket damaged

For additional support, refer to nVent Cooling Sales and Service Contacts on page 4.

© 2024 nVent

3-PHASE BASIC AIR CONDITIONING TROUBLE SHOOTING CHECK LIST - REMOTE ACCESS CONTROL VERSION

1. Check manufacturer's nameplate located on the unit for correct power supply.
2. Turn on power to the unit. The controller will display a start up sequence then revert to the normal temperature display mode. Is the correct enclosure temperature displayed?

   Note: The temperature may be alternating with an alarm code.

YES, proceed to step 3.		
NO, possible problem: » Open controller fuse » Controller in alarm condition. See ALARM CONDITION DISPLAY on page 60. » Defective controller » Defective thermistor - check by blowing warm air across the thermistor. If display temperature rises, thermistor is operable.	→	**Replace part**

3. The cooling status indication (symbol G) should be on. Is the symbol on? If not, press and hold the lower right "snowflake" button for greater than five seconds. Is the cooling mode symbol now on?

YES, proceed to step 4.		
NO, possible problem: » Defective controller	→	**Replace part**

4. The evaporator (Enclosure or "COLD" air) fan/impeller should turn on. Is there airflow?

YES, proceed to step 5.		
NO, possible problem: » Controller in alarm condition. See ALARM CONDITION DISPLAY on page 60. » Open motor winding » Stuck fan/impeller » Obstructed blades/wheel » Defective motor capacitor	→	**Repair or Replace defective part**

5. Check phase monitor indicator light, is it Illuminated?

YES, proceed to step 6.		
NO, possible problem: » Incorrect electrical phasing	→	De-energize unit and swap any two power leads to unit. If problem still persists, replace phase monitor. Refer to phase monitor section of this manual for additional information.

6. Start the cooling cycle by changing the cooling setpoint parameter (r01) to the low limit of 72 F (22 C). Symbol 1 should be displayed indicating a call for cooling. If symbol 1 is flashing, the unit is in Restart Time Delay mode. Within 6 minutes, symbol 1 should display without flashing. Is symbol 1 displayed without flashing?

YES, proceed to step 7.		
NO, possible problem: » Unit still in Recycle Time Delay mode » Enclosure temperature below cooling setpoint temperature	→	**Wait and/or heat enclosure thermistor T1**

© 2024 nVent

7. The compressor and the condenser (Ambient or “HOT” air) impeller(s) should turn on. Is there adequate airflow?

YES, proceed to step 8.
NO, possible problem: » Open motor winding(s) » Stuck impeller(s) » Obstructed wheel(s) » Defective motor capacitor(s) → **Repair or Replace defective part**

8. Carefully check the compressor for proper operation - motor should cause slight vibration and the outer case of the compressor should be warm. Is the compressor showing signs of this?

YES, wait 5 minutes, proceed to step 9.
NO, possible problem: » Defective start or run capacitor » Defective overload » Defective start relay » Defective contactor » Defective compressor → **Repair or Replace defective part**

9. Make sure the coils are clean then check the evaporator “air in” and “air out” temperatures. If the temperatures are the same:

» Possible loss of refrigerant » Possible bad valves in compressor → **Repair or Replace defective part**

3-PHASE SYMPTOMS AND POSSIBLE CAUSES - REMOTE ACCESS CONTROL VERSION

SYMPTOM	POSSIBLE CAUSE
Unit won’t cool	Clogged fins on coil(s)
	Dirty filter
	Impellers not running
	Compressor not running
	Compressor runs, but has bad valves
	Loss of refrigerant
Compressor tries to start but won’t run	Low line voltage at start. Should be +/-10% rated voltage.
	Compressor motor stuck
	Bad contactor
	Bad overload switch
	Bad run/start capacitor
Unit blows breakers	Undersized breaker/fuse or not time delayed
	Short in system
Getting water in enclosure	Drain plugged
	Drain tube kinked
	Enclosure not sealed (allowing humidity in)
	Mounting gasket damaged

For additional technical support, contact nVent Equipment Protection at 800-896-2665.

© 2024 nVent

F-GAS INFORMATION - S06 MODELS

	S060316GXXX	S060326GXXX	S060516GXXX S060526GXXX
Refrigerant Kühlmittel Chłodziwo	R134a	R134a	R134a
GWP	1430	1430	1430
Factory Charge Füllmenge durch Hersteller Opłata Fabryczna	133 Grams 133 Gramm 133 Gramów	128 Grams 128 Gramm 128 Gramów	162 Grams 162 Gramm 162 Gramów
CO_2 Equivalent CO_2 Equivalent CO_2 Ekwilalent	0.19 Tons 0,19 Tonnen 0,19 Tony	0.18 Tons 0,18 Tonnen 0,18 Tony	0.23 Tons 0,23 Tonnen 0,23 Tony

F-GAS INFORMATION - S10 MODELS

	S101016GXXX S101026GXXX S101046GXXX	S101516GXXX S101526GXXX	S101546GXXX
Refrigerant Kühlmittel Chłodziwo	R134a	R134a	R134a
GWP	1430	1430	1430
Factory Charge Füllmenge durch Hersteller Opłata Fabryczna	283 Grams 283 Gramm 283 Gramów	425 Grams 425 Gramm 425 Gramów	510 Grams 510 Gramm 510 Gramów
CO_2 Equivalent CO_2 Equivalent CO_2 Ekwilalent	0.40 Tons 0,40 Tonnen 0,40 Tony	0.61 Tons 0,61 Tonnen 0,61 Tony	0.73 Tons 0,73 Tonnen 0,73 Tony

F-GAS INFORMATION - S16 MODELS

	S162026GXXX S162046GXXX	S162526GXXX	S162546GXXX	S164046GXXX
Refrigerant Kühlmittel Chłodziwo	R134a	R134a	R134a	R134a
GWP	1430	1430	1430	1430
Factory Charge Füllmenge durch Hersteller Opłata Fabryczna	709 Grams 709 Gramm 709 Gramów	737 Grams 737 Gramm 737 Gramów	850 Grams 850 Gramm 850 Gramów	1247 Grams 1247 Gramm 1247 Gramów
CO_2 Equivalent CO_2 Equivalent CO_2 Ekwilalent	1.01 Tons 1,01 Tonnen 1,01 Tony	1.05 Tons 1,05 Tonnen 1,05 Tony	1.22 Tons 1,22 Tonnen 1,22 Tony	1.78 Tons 1,78 Tonnen 1,78 Tony

© 2024 nVent

NOTES

© 2024 nVent

NOTES

© 2024 nVent

NOTES

© 2024 nVent

nVent
2100 Hoffman Way
Anoka, MN 55303 USA
☎ +1.763.422.2211
+1.763.576.3200
nVent.com

© 2024 nVent
P/N 89217666