ProLine Frames

DOUBLE-BAY FRAMES

ProLine offers the broadest range of standard sizes in the industry.

SPECIFICATIONS

- Welded corners with steel corner blocks that add strength and rigidity
- 2,5 mm roll-formed frame sections for strength
- Flange on door and side openings deflects liquids away from the enclosure interior
- Rectangular frame holes are designed for metric cage nut fasteners
- Round frame holes allow numerous grounding locations using M5 thread-forming screws
- Access to both sides of frame mounting holes allows standard components to be easily installed
- Provisions for slide-in subpanel, rack mounting and accessory mounting
- Simple means for joining frames to create multiple-bay enclosures
- An open roll-formed profile design affords complete surface corrosion protection and assembly access
- Sealed mounting for all external accessories
- Center post on rear bottom and top, for more strength
- Sealed mounting for all external accessories
- Rear cover possible to mount on the back, rear door possible only as modification.
- Finished with RAL 7035 textured, gray polyester powder paint

STANDARD PRODUCT

Item number	Size H x W x d [mm]	Nominal Size H x W x D [mm]	Maximum Mounting Plate Size [mm]	Maximum Rack Mounting Space
PF14125	1380 x 1199 x 488	1400 x 1200 x 500	1285 x 1130	28U x 2
PF16125	1580 x 1199 x 488	1600 x 1200 x 500	1485 x 1130	33U x 2
PF18124	1780 x 1199 x 388	1800 x 1200 x 400	1685 x 1130	38U x 2
PF18125	1780 x 1199 x 488	1800 x 1200 x 500	1685 x 1130	38U x 2
PF18126	1780 x 1199 x 588	1800 x 1200 x 600	1685 x 1130	38U x 2
PF18128	1780 x 1199 x 788	1800 x 1200 x 800	1685 x 1130	38U x 2
PF20124	1980 x 1199 x 388	2000 x 1200 x 400	1885 x 1130	42U x 2
PF20125	1980 x 1199 x 488	2000 x 1200 x 500	1885 x 1130	42U x 2
PF20126	1980 x 1199 x 588	2000 x 1200 x 600	1885 x 1130	42U x 2
PF20128	1980 x 1199 x 788	2000 x 1200 x 800	1885 x 1130	42U x 2
PF22125	2180 x 1199 x 488	2200 x 1200 x 500	2085 x 1130	47U x 2
PF22126	2180 x 1199 x 588	2200 x 1200 x 600	2085 x 1130	47U x 2
PF22128	2180 x 1199 x 788	2200 x 1200 x 800	2085 x 1130	47U x 2

ProLine Frames

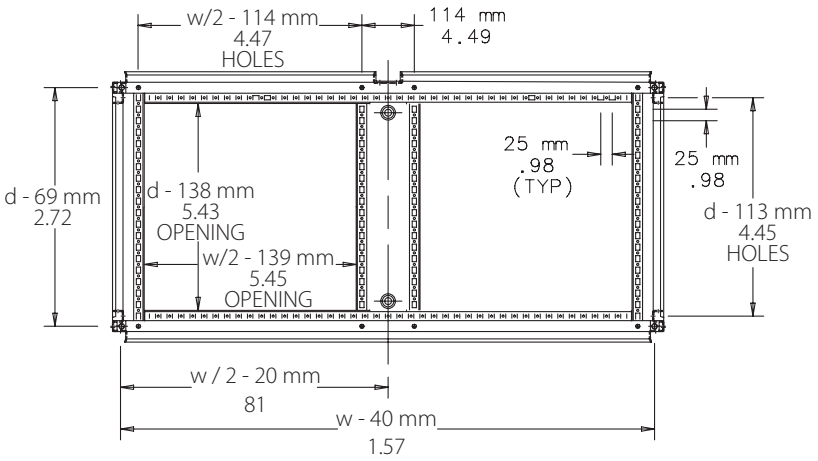

NOTE:
1. Includes frame and frame nuts (12) to attach exterior components

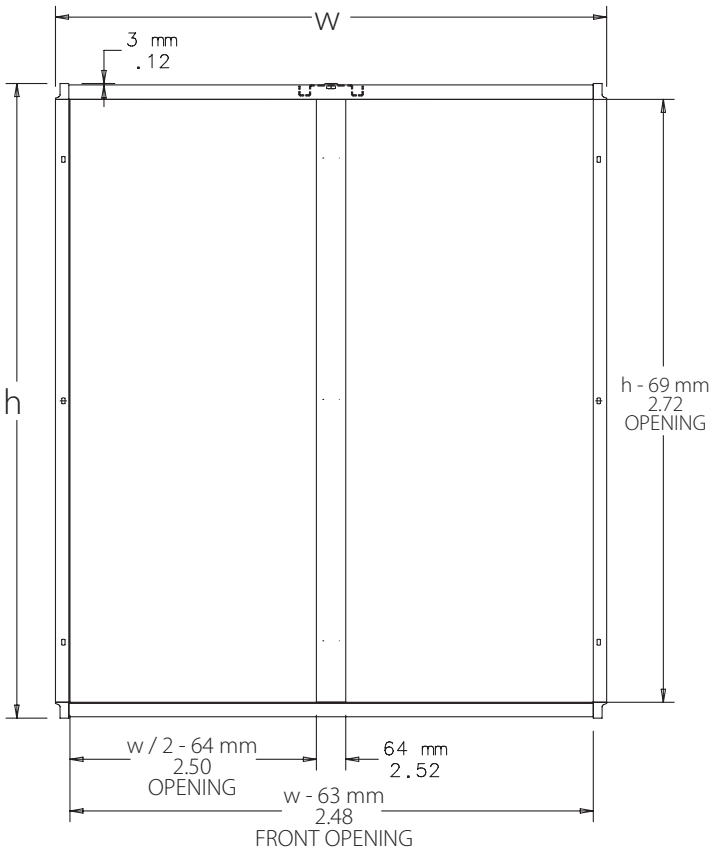

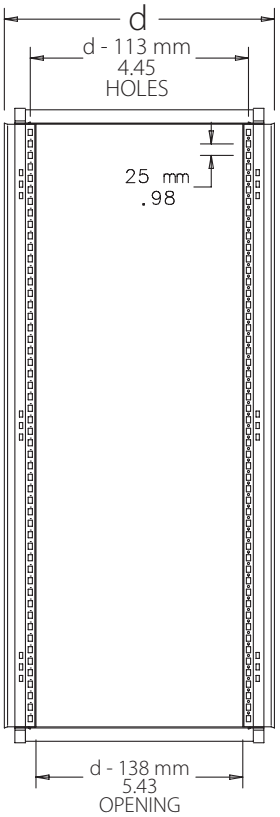

87414907

Our powerful portfolio of brands:
CADDY ERICO HOFFMAN RAYCHEM SCHROFF TRACER

©2019 nVent. All nVent marks and logos are owned or licensed by nVent Services GmbH or its affiliates. All other trademarks are the property of their respective owners.
nVent reserves the right to change specifications without notice.