# SEISMIC FREE-STANDING, DUAL-ACCESS CABINET, TYPE 3R, 4, 4X, 12

## INDUSTRY STANDARDS

UL 508A Listed; Type 3R, 4, 4X, 12; File No. E61997
cUL Listed per CSA C22.2 No. 94; Type 3R, 4, 4X, 12; File No. E61997

NEMA/EEMAC Type 3R, 4, 4X, 12
E.I.A. RS310-D
CSA, File No. 42186, Type
IEC 60529, IP66
OSPHD Approved OPM-0248-13, add: OPM-0247-13
NEBS-Telecordia GR-63-CORE Zone 4: Tested with 1000 lb. of equipment installed
Meets California Building Code (CBC) requirements

## APPLICATION

Ideal where front or front and rear access is required. These Type 3R, 4, 4X, and 12 stainless steel enclosures have sturdy unibody construction and include 19-in. rack angles to support equipment. These enclosures are ideal for housing and protecting networking and communications equipment from corrosion, liquid, and seismic events. Front rack angles on 36-in. wide models include integral, vertical cable management that supports networking (copper and fiber) and power cables.

## SPECIFICATIONS

- 304 stainless steel construction
- Seams continuously welded and ground smooth; no holes or knockouts
- Lifting eyes for easy handling
- Welded front-to-rear mounting struts, 3 on each side
- Vault-style 3-point latches operated by Type 316L stainless steel PowerGlide padlocking handle
- Concealed, removable hinges
- Seismic bottom-mounting plates (qty. 6) made of painted plate steel for 5/8-in. diameter anchors
- Data pockets are high-impact thermoplastic
- Internal mounting channels welded horizontally to sides at top, bottom and center
- 36-in. wide models include 2 Seismic Rack Panel Kits with EIA 310 specified square-holes (.375 x .375) that are infinitely adjustable front to rear
- 24-in. models include 2 Rack Mounting Angles tapped #10-32 thread and spaced per EIA 310 that are infinitely adjustable front to rear
- On 36-in. wide models, front Seismic Rack Panel includes integral, vertical, RU-aligned fingers for supporting copper and fiber networking cables
- AC-Ready models include cutout for G52 (8,000 or 12,000 BTU) air conditioner; AC must be ordered separately
- Oil-resistant door gasket
- Bonding provision on door
- Provision for mounting enclosure light kits

## FINISH

Enclosures are unpainted. Covers, sides, top and bottom have smooth #3 brushed finish.

## ACCESSORIES

***See also Accessories***
19-in. Rack Mounted Shelves
Bonding and Grounding Kits
Full and Partial Panels (Painted and Plated)
PDUs: 19-in. Rack- and Vertical-Mounted
Electric Heater
Door Stop Kit
Cooling Products (Air Conditioners, Heaters, Fan kits)
Enclosure Light Kits

## MODIFICATION AND CUSTOMIZATION

nVent HOFFMAN excels at modifying and customizing products to your specifications. Contact your local nVent HOFFMAN sales office or distributor for complete information.

Standard Product

| Catalog Number | AxBxC in. | AxBxC mm | Rack Units |
|---|---|---|---|
| D722436SDAS | 72.22 x 24.12 x 36.14 | 1834 x 613 x 918 | 32 |
| D723646SDAS | 72.22 x 36.14 x 46.16 | 1834 x 918 x 1173 | 32 |
| D902436SDAS | 90.26 x 24.12 x 36.14 | 2293 x 613 x 918 | 42 |
| D903646SDAS | 90.26 x 36.14 x 46.16 | 2293 x 918 x 1173 | 42 |

Standard Product: **AC-Ready Cabinets**

| Catalog Number | AxBxC in. | AxBxC mm | Rack Units |
|---|---|---|---|
| D722436SDASAC | 72.22 x 24.12 x 36.14 | 1834 x 613 x 918 | 32 |
| D723646SDASAC | 72.22 x 36.14 x 46.16 | 1834 x 918 x 1173 | 32 |

Order AC separately.

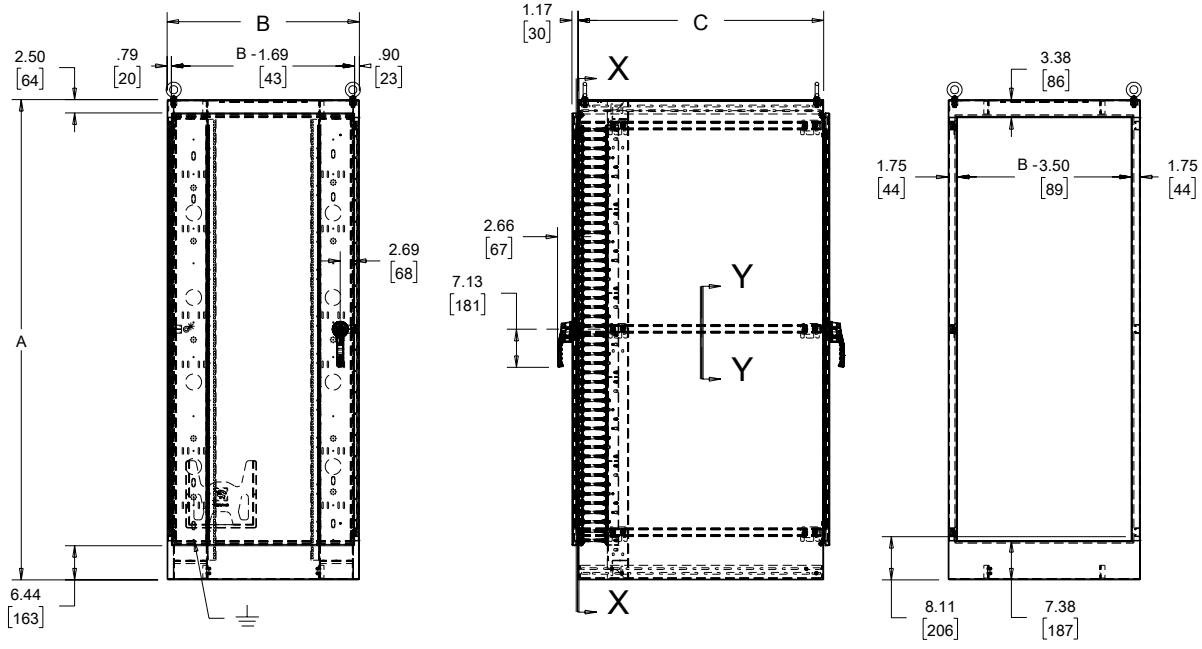


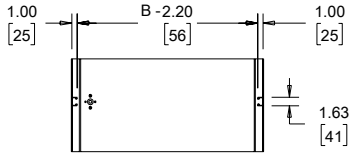


Y-Y

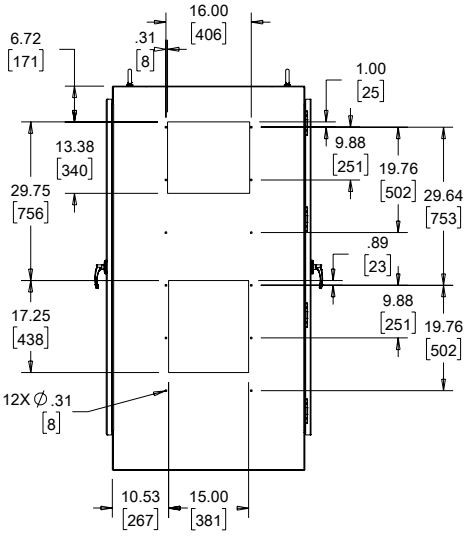


AC-READY MODELS

89143224

nVent | HOFFMAN

# G52 AIR CONDITIONER SPECIFICATIONS

## Performance Data **G52 Models 8000/12000 BTU/Hr. (2300/3500 Watt)**

| CATALOG NUMBER | | | | | | |
|---|---|---|---|---|---|---|
| Indoor Model | G520816G050 | G520826G050 | G520846G050 | G521216G050 | G521226G050 | G521246G050 |
| Indoor Model Stainless Steel Type 4X | G520816G051 | G520826G051 | G520846G051 | G521216G051 | G521226G051 | G521246G051 |
| Indoor Model with Remote Access Control* | G520816G060 | G520826G060 | G520846G060 | G521216G060 | G521226G060 | G521246G060 |
| Outdoor Model without Heat Pkg. | G520816G100 | G520826G100 | G520846G100 | G521216G100 | G521226G100 | G521246G100 |
| Outdoor Model Partial Recessed Mount** | G520816G101 | G520826G101 | G520846G101 | G521216G101 | G521226G101 | G521246G101 |
| Outdoor Model with Heat Pkg. | G520816G150 | G520826G150 | G520846G150 | G521216G150 | G521226G150 | G521246G150 |
| Outdoor Model with Heat Pkg. Stainless Steel Type 4X | G520816G151 | G520826G151 | G520846G151 | G521216G151 | G521226G151 | G521246G151 |
| **COOLING PERFORMANCE** | | | | | | |
| **Nominal:** | | | | | | |
| **BTU/Hr.** | **8000** | **8000** | **8000** | **12000** | **12000** | **12000** |
| **Watts** | **2300** | **2300** | **2300** | **3500** | **3500** | **3500** |
| At 131 F/131 F (55 C/55 C): | | | | | | |
| BTU/Hr. | 7300/8200 | 7300/8200 | 8800/9800 | 12000/12500 | 12000/12500 | 11100/12000 |
| Watts | 2139/2403 | 2139/2403 | 2578/2871 | 3516/3662 | 3516/3662 | 3252/3516 |
| At 95 F/95 F (35 C/35 C): | | | | | | |
| BTU/Hr. | 6000/6800 | 6000/6800 | 7400/8200 | 9900/10700 | 9900/10700 | 9900/10700 |
| Watts | 1758/1992 | 1758/1992 | 2168/2402 | 2900/3135 | 2900/3135 | 2900/3135 |
| Refrigerant | R134a | R134a | R134a | R134a | R134a | R134a |
| Refrigerant Charge (ounces/grams) | 24/680 | 24/680 | 24/680 | 38/1077 | 38/1077 | 38/1077 |
| Operating Temperature Range: | | | | | | |
| Maximum (°F/°C) | 131/55 | 131/55 | 131/55 | 131/55 | 131/55 | 131/55 |
| Indoor Minimum (°F/°C) | 50/10 | 50/10 | 50/10 | 50/10 | 50/10 | 50/10 |
| Outdoor Minimum (°F/°C) | -40/-40 | -40/-40 | -40/-40 | -40/-40 | -40/-40 | -40/-40 |
| Airflow at 0 Static Pressure: | | | | | | |
| Internal loop 50 Hz (CFM / $m^3$/hr.) | 285/484 | 285/484 | 285/484 | 287/487 | 287/487 | 287/487 |
| External loop 50 Hz (CFM / $m^3$/hr.) | 650/1104 | 650/1104 | 650/1104 | 635/1078 | 635/1078 | 635/1078 |
| Internal loop 60 Hz (CFM / $m^3$/hr.) | 310/527 | 310/527 | 310/527 | 305/518 | 305/518 | 305/518 |
| External loop 60 Hz (CFM / $m^3$/hr.) | 700/1189 | 700/1189 | 700/1189 | 650/1104 | 650/1104 | 650/1104 |
| Max. Heater W (Outdoor Models): | 2000 | 2000 | 2000 | 2000 | 2000 | 2000 |
| **ELECTRICAL DATA** | | | | | | |
| **Rated Voltage** | **115** | **230/208-230** | **400/460 3~** | **115** | **230/208-230** | **400/460 3~** |
| Frequency (Hz) | 50/60 | 50/60 | 50/60 | 50/60 | 50/60 | 50/60 |
| Operating Range | +/- 10% | +/- 10% | +/- 10% | +/- 10% | +/- 10% | +/- 10% |
| Max. Power Consumption (W) | 1250/1415 | 1250/1415 | 806/957*** | 2100/2427 | 1830/2130 | 910/1106*** |
| Max. Nominal Current (A at 50/60 Hz) | 11.2/12.3 | 5.6/7.0-6.2 | 3.1/3.2 | 16.1/21.0 | 9.1/10.6-9.5 | 3.6/3.5 |
| Starting Current (A) | 48 | 27 | 16 | 57 | 38 | 16 |
| Agency Approvals | UL/cUL Listed<br>CE<br>EAC<br>Others available upon request | | | | | |
| Power Input Description | Terminal Block | | | | | |
| **ENCLOSURE PROTECTION** | | | | | | |
| UL Type | Type 12, 3R, 4 standard**<br>Type 4X Stainless steel optional | | | | | |
| International Rating | IP56 internal loop<br>IP34 external loop | | | | | |
| **CONTROLLER** | | | | | | |
| Description | Basic mechanical thermostat with digital display | | | | | |
| Thermostat Location | Enclosure side on all base models | | | | | |
| Digital Display Location: | | | | | | |
| Indoor Models | Ambient side | | | | | |
| Outdoor Models | Enclosure side | | | | | |
| Factory Thermostat Setting (F/C) | 80/27 | | | | | |
| **SOUND LEVEL** | | | | | | |
| At 1.5 Meters | 68 dB(A) | | | | | |
| **UNIT CONSTRUCTION** | | | | | | |
| Material | Galvanized sheet metal standard<br>Stainless steel optional | | | | | |
| Finish | RAL 7035 light-gray, semi-textured powder-coat paint standard<br>Other colors available | | | | | |
| **ACCESSORIES** | | | | | | |
| EASYSWAP Adaptor Plenum (GENESIS M52) | Enables SPECTRACOOL to be mounted to a GENESIS M52 air conditioner cutout<br>Catalog Number PLM52G52 | | | | | |
| **UNIT DIMENSIONS** | | | | | | |
| Height (in./mm) | 52.69/1338 | | | | | |
| Width (in./mm) | 17.12/435 | | | | | |
| Depth (in./mm) | 11.66/296 | | | | | |
| Weight (lb./kg) | 128/58.1 | 128/58.1 | 138/62.6 | 131/59.4 | 131/59.4 | 141/64.0 |

*Units with Remote Access Control utilize a digital controller and communicate via EtherNet/IP, Profinet, Modbus TCP/IP and SNMP over ethernet or modbus RTU over USB.

**Outdoor Model Partial Recessed Mount units are UL Type 12, 3R only.

***Watts based on .65 power factor.

## SEISMIC RACK PANEL KIT

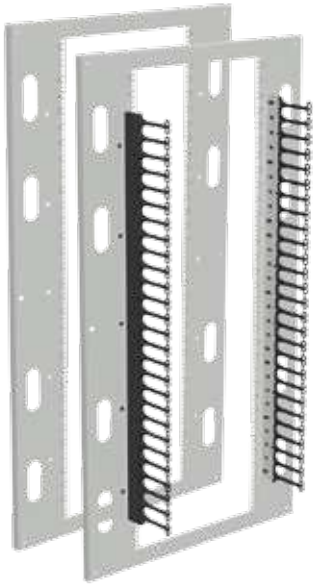

Used when converting a standard Free-Stand Enclosure to a Seismic Free-Stand Enclosure. Rack Panel allows rack-mount equipment to be installed in 36-in. wide enclosures. Seismic Rack Panel has EIA 310 specified square-holes (.375x.375) and larger openings to allow cables to pass through panel. Use with Seismic Panel Support Kits (included) and Seismic Mounting Plate Kits to obtain Seismic standards. Made from 12 gauge steel and painted RAL 7035.

Available with or without vertical cable management for copper and fiber networking cables. Kit includes one (1) Seismic Rack Panel and two (2) Seismic Panel Supports with hardware.

### Standard Product

| Catalog Number | D in./mm | E in./mm | Fits Enclosure Height x Width in./mm | Cable Managers | Ref. Drawing |
|---|---|---|---|---|---|
| A72P36RP | 60.00<br>1524 | 32.40<br>823 | 72.22 x 36.14<br>1834 x 918 | No | A |
| A72P36RPC | 60.00<br>1524 | 32.40<br>823 | 72.22 x 36.14<br>1834 x 918 | Yes | B |
| A90P36RP | 78.00<br>1981 | 32.40<br>823 | 90.26 x 36.14<br>2293 x 918 | No | A |
| A90P36RPC | 78.00<br>1981 | 32.40<br>823 | 90.26 x 36.14<br>2293 x 918 | Yes | B |

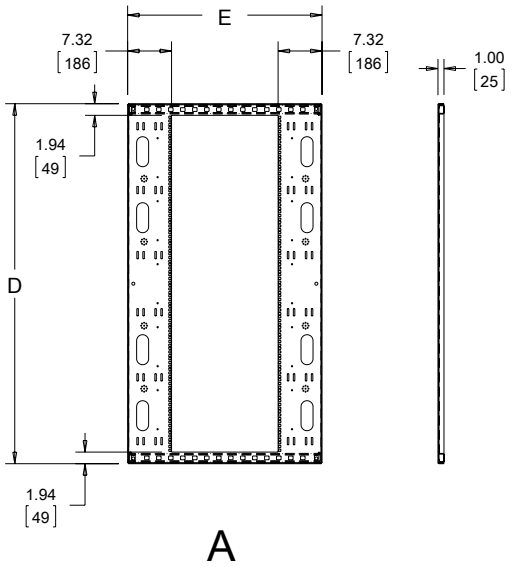


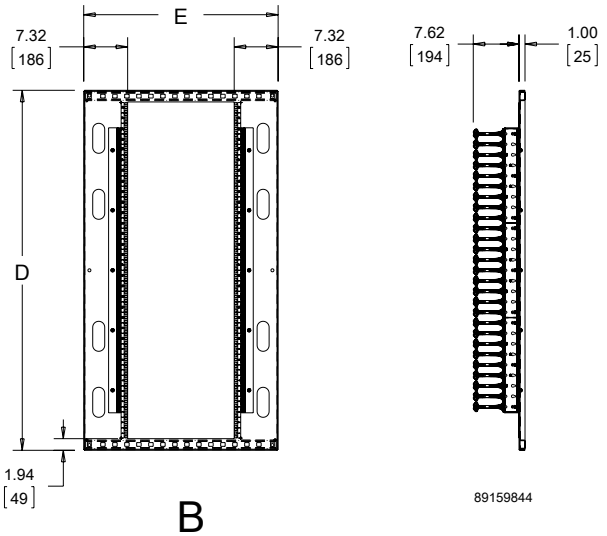

## SEISMIC MOUNTING PLATE KITS

Kit of six (6) stainless steel mounting plates install over the mounting holes in the base of the enclosure. The mounting plates come predrilled to accept 1/2-in., 5/8-in. or 3/4-in. diameter mounting hardware (not included). Plate dimensions are 3.75 x 3.75 x .25 in. (95 x 95 x 6 mm).

**BULLETIN: DCY**

Standard Product

| Catalog Number | Description | Anchor Size |
|---|---|---|
| ASMP12SS | Seismic Mounting Plate, 1/2-in. | 1/2 in. |
| ASMP58SS | Seismic Mounting Plate, 5/8-in. | 5/8 in. |
| ASMP34SS | Seismic Mounting Plate, 3/4-in. | 3/4 in. |

## RACK MOUNTING ANGLES - L-STYLE (TYPE RP)

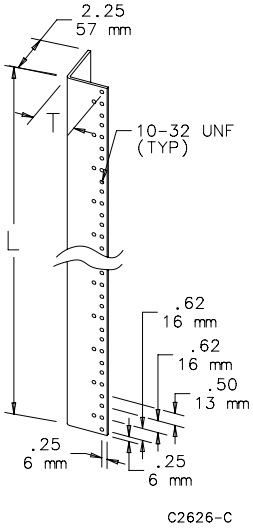


Pairs of full-length rack mounting angles are available for mounting 19-in. and 24-in. rack-mounted equipment. Type RP rack mounting angles are 10 gauge steel with mounting holes tapped #10-32 thread and spaced per EIA standard RS-310-D universal spacing. Angles and mounting hardware are plated. All mounting hardware is furnished.

**BULLETIN: A80**

| Catalog Number | Fits Enclosure A x B in./mm | For Rack Size in./mm | K in./mm | K (m) | L in./mm | M in./mm | T in./mm | Number of Units |
|---|---|---|---|---|---|---|---|---|
| A60RP24F5 | 60.00 x 24.00<br>1524 x 610 | 19.00<br>483 | 3.78 | 96 | 49.00<br>1245 | 7.78<br>198 | 1.94<br>49 | 28 |
| A72RP24F5 | 72.00 x 24.00<br>1829 x 610 | 19.00<br>483 | 3.66 | 93 | 61.25<br>1556 | 7.66<br>195 | 1.94<br>49 | 35 |
| A72RP30F5 | 72.00 x 30.00<br>1829 x 762 | 24.00<br>610 | 3.66 | 93 | 61.25<br>1556 | 7.66<br>195 | 2.44<br>62 | 35 |
| A90RP24F5 | 90.00 x 24.00<br>2286 x 610 | 19.00<br>483 | 3.91 | 99 | 78.75<br>2000 | 7.91<br>201 | 1.94<br>49 | 45 |

One unit equals 1.75 inches (44 mm).

## SCREW PACKAGES

Screw Packages are for mounting rack panels and equipment to rack angles.

**BULLETIN: A80, DACCY**

| Catalog Number | Color | Description | Pkg. Qty. |
|---|---|---|---|
| ES1224 | Silver | 12-24 x 5/8 in. combo head | 20 |
| ES1224250 | Silver | 12-24 x 5/8 in. combo head | 250 |
| ES1224B | Black | 12-24 x 5/8in. combo head | 20 |
| ES1224B250 | Black | 12-24 x 5/8 in. combo head | 250 |
| ASM5 | Silver | M5 x 20 mm combo Head | 20 |
| ASM6 | Silver | M6 x 16 mm combo head | 20 |
| ASM5T | Silver | M5 x 12 mm thread-forming Phillips hex head screws | 20 |
| ASM6250 | Silver | M6 x 16 mm combo head | 250 |
| AS1032 | Silver | 10-32 x 5/8 in. combo head | 20 |
| AS1032250 | Silver | 10-32 x 5/8 in. combo head | 250 |
| AS1032B | Black | 10-32 x 5/8 in. combo head | 20 |

Use ASM5T on ProLine frame or Net Series extruded holes.

## CAGE NUT PACKAGE

Cage Nut Packages are for use with square-hole rack angles. Cage nuts are plated steel.

**BULLETIN: DACCY**

| Catalog Number | Color | Description | Pkg. Qty. |
|---|---|---|---|
| PM5CN | Silver | M5 cage nut | 20 |
| PM6CN | Silver | M6 cage nut | 20 |
| PM6CN250 | Silver | M6 cage nut | 250 |
| P1032CN | Silver | 10-32 cage nut | 20 |
| P1032CN250 | Silver | 10-32 cage nut | 250 |
| P1224CN | Silver | 12-24 cage nut | 20 |
| P1224CN250 | Silver | 12-24 cage nut | 250 |