SEISMIC 2-POST OPEN FRAME RACK

APPLICATION

Designed for applications affected by vibrations and seismic activity, Seismic 2-Post Open Frame Racks integrate cable management into a fully welded, heavy gauge steel frame. Used in network, server, and telecommunication room applications that may be subject to seismic activity or vibration. Racks can be ganged with standard 2- or 4-post racks to expand existing systems.

FEATURES

- Nominal height is 7 ft. (2.13 m) (45U)
- Fits 19-in. rack-mount equipment
- Side rails are tapped on both sides with 12-24 UNC threads for quick installation
- EIA Universal 5/8 - 5/8 - 1/2 in. vertical mounting-hole pattern matches industry standards and connects to most competitive racks
- Integral front waterfall top
- Pre-drilled holes on top to ease runway installation
- Top and bottom cable entry cutouts
- Ground provision with ground symbol
- Full complement of matching components for equipment and cable management

SPECIFICATIONS

- Rack is 10-gauge steel, fully welded for maximum rigidity

FINISH

Pre-treated steel coated with RAL 9005 black textured, low-gloss polyester powder paint. Other finishes available; contact Hoffman Customer Service.

LOAD RATING

- Dynamic: 500 lb. (227 kg)
- Static: 2500 lb. (1134 kg)
- For higher loads, contact Hoffman. Static load has a safety factor of 4 applied.

BULLETIN: DOFRS

INDUSTRY STANDARDS

UL 2416 Listed; File No. E230874,
2500 lb. (1134 kg) rated load
cUL Listed per CSA C22.2 No. 182.4; File No. E230874

NEBS -Telcordia GR-63-CORE Zone 4: Tested with 500 lb. (226.8 kg) of equipment installed
EIA 310-D
OSHPD Pre-Approval OPM-0197-13
NEBS is a trademark of Telcordia

Standard Products

Catalog Number	AxBxC in.	AxBxC mm	Rack Units
ESDR19FM45U	86.02 x 26.75 x 18.00	2185 x 679 x 457	45

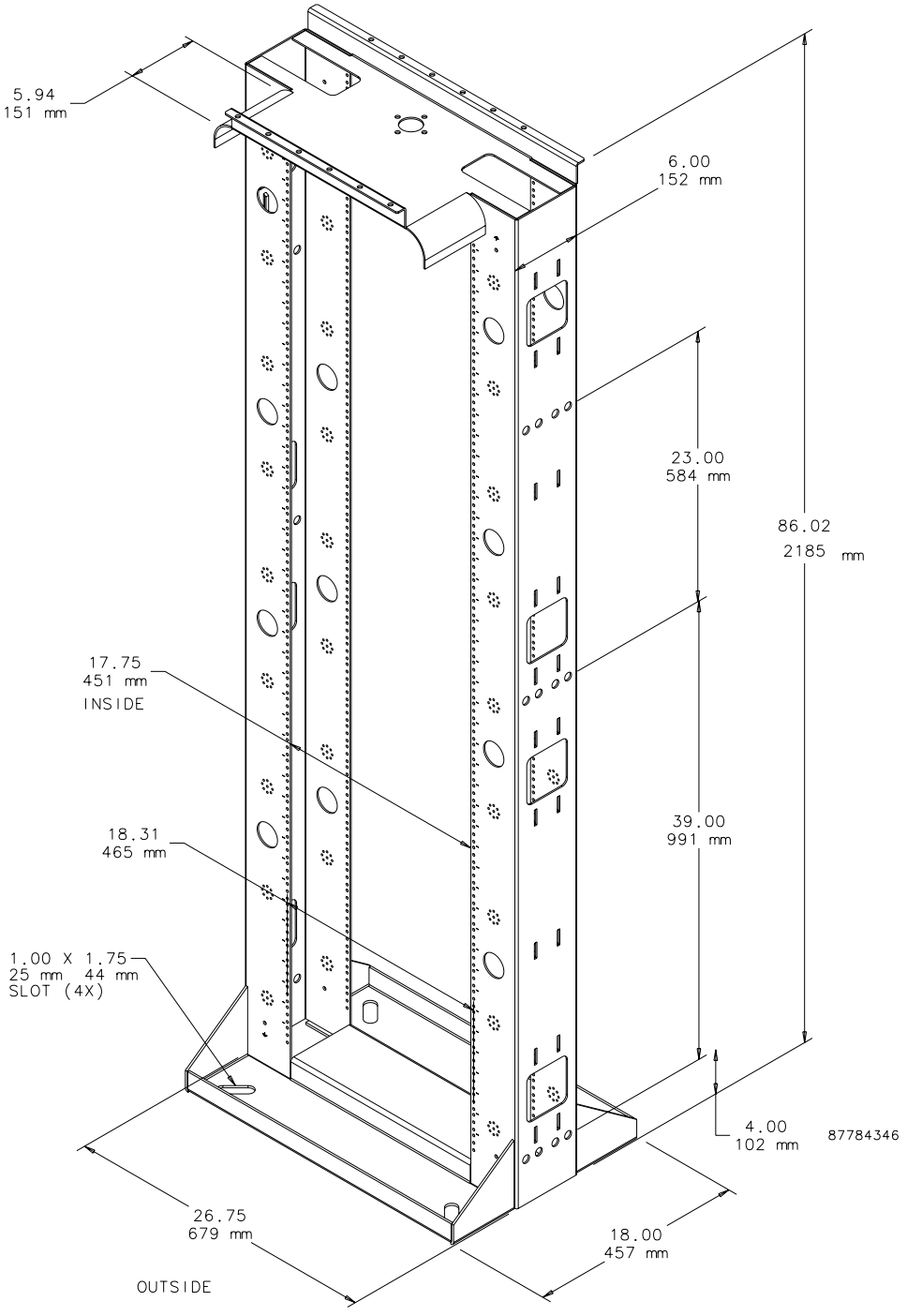
5.94
151 mm
6.00
152 mm
23.00
584 mm
86.02
2185 mm
17.75
451 mm
INSIDE
18.31
465 mm
39.00
991 mm
1.00 X 1.75
25 mm 44 mm
SLOT (4X)
4.00
102 mm
87784346
26.75
679 mm
18.00
457 mm
OUTSIDE