TB1624HD & TB914HD
Heavy Duty Telescoping Bracket

Part Number	Stud Spacing	Description
TB1624HD	14.5" TO 25"	Heavy Duty Telescoping Bracket
TB914HD	9" TO 14.5"	Mini Heavy Duty Telescoping Bracket

1 As shipped

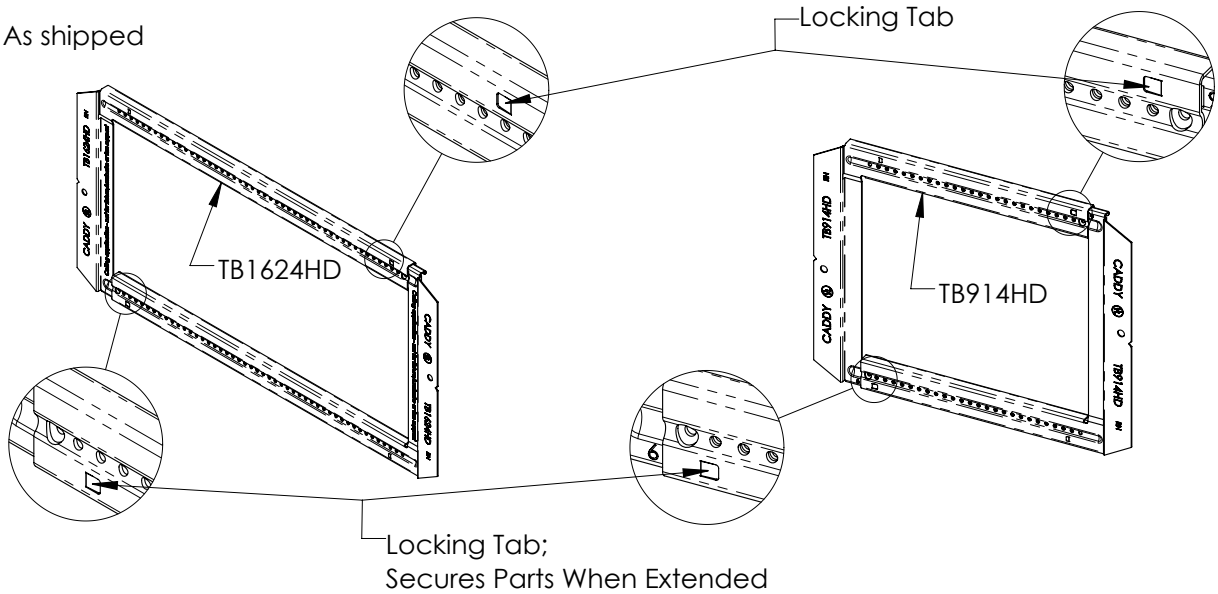

2 Snap TB45P/TB45PK/TB4PU/TB4PKU Center Plate onto TB1624HD/TB914HD

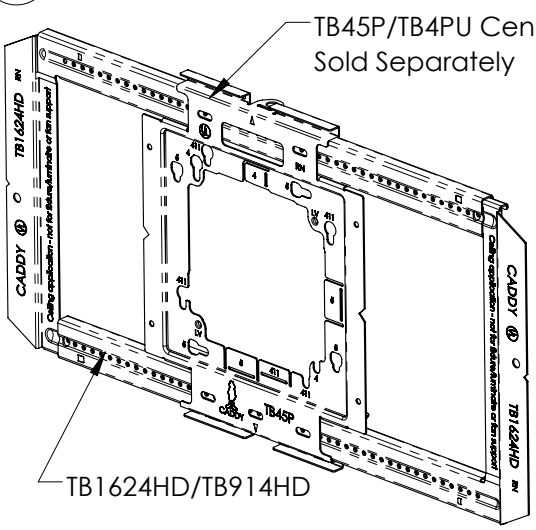

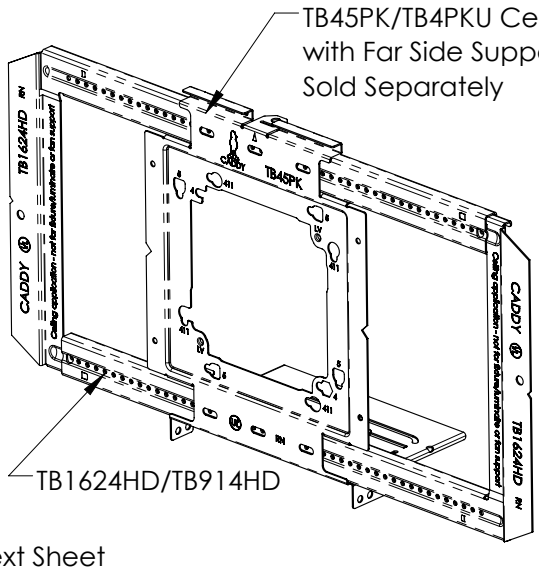

Next Sheet

WARNING:
1. nVent products shall be installed and used only as indicated in nVent product instruction sheets and training materials. Instruction sheets are available at www.nVent.com and from your nVent customer service representative.
2. nVent products must never be used for a purpose other than the purpose for which they were designed or in a manner that exceeds specified load ratings.
3. All instructions must be completely followed to ensure proper and safe installation and performance.
4. Improper installation, misuse, misapplication or other failure to completely follow nVent's instructions and warnings may cause product malfunction, property damage, serious bodily injury and/or death, and void your warranty.
5. Products that are manufactured using spring steel components shall be used only in a non-corrosive indoor environment.
6. All pipe supports, hangers, intermediate components and structural attachments must ONLY be used as described herein and are NEVER to be used for any other purpose.

NOTE: All load ratings are for static conditions and do not account for dynamic loading such as wind, water or seismic loads, unless otherwise noted.

The customer is responsible for:
a. Conformance to all governing codes.
b. The integrity of structures to which the products are attached, including their capability of safely accepting the loads imposed, as evaluated by a qualified engineer.
c. Using appropriate industry standard hardware as noted above.

SAFETY INSTRUCTIONS:
All governing codes and regulations and those required by the job site must be observed.
Always use appropriate safety equipment such as eye protection, hard hat, and gloves as appropriate to the application.

nVent, nVent CADDY, nVent ERICO Cadweld, nVent ERICO Critec, nVent ERICO, nVent ERIFLEX, and nVent LENTON are owned by nVent or its global affiliates. All other trademarks are the property of their respective owners. nVent reserves the right to change specifications without prior notice.

© 2019 - 2021 nVent All Rights Reserved

3 Bend Tab to Lock Center Plate to Rail during Transportation - Optional

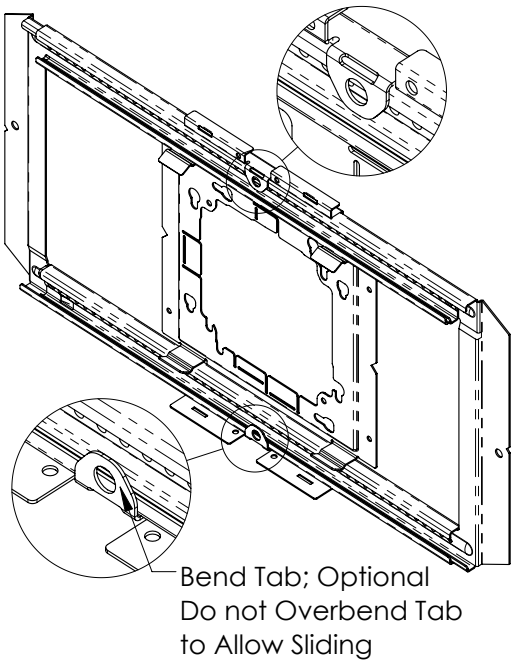

4 Slides to Adjust for Stud Width

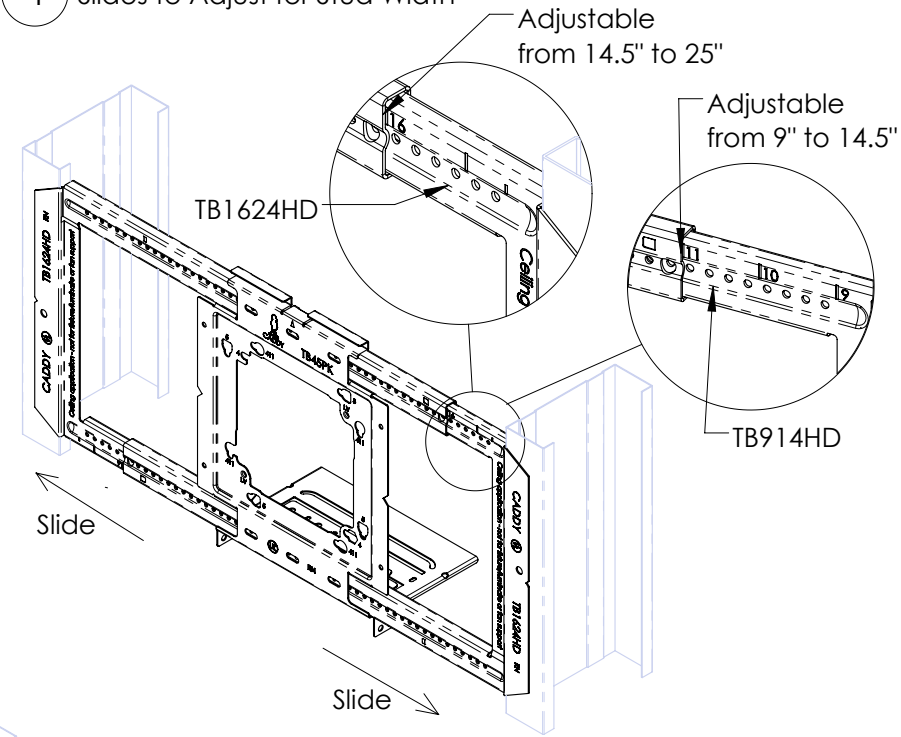

5 Secure with (2) screws

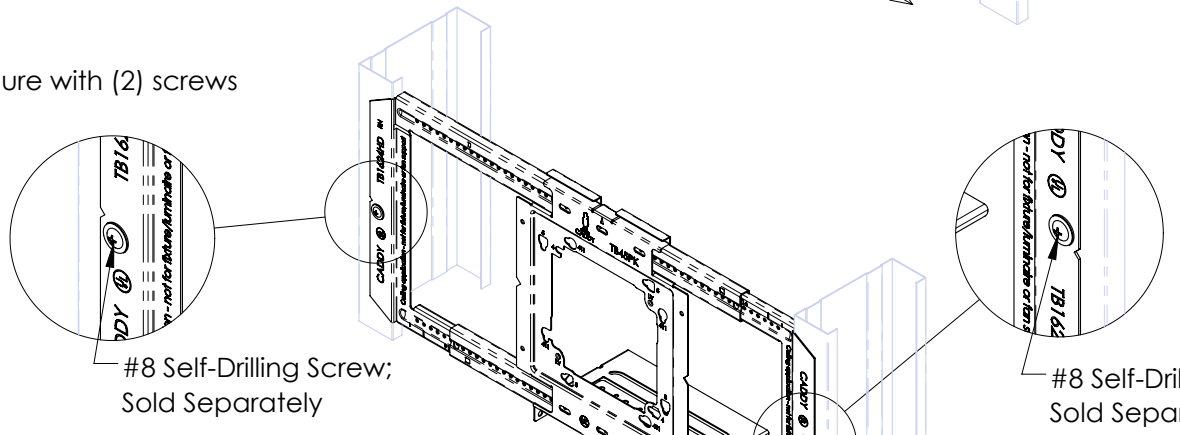

6 Slide Center Plate to Desired Position and Secure Center Plate with (2) Screws

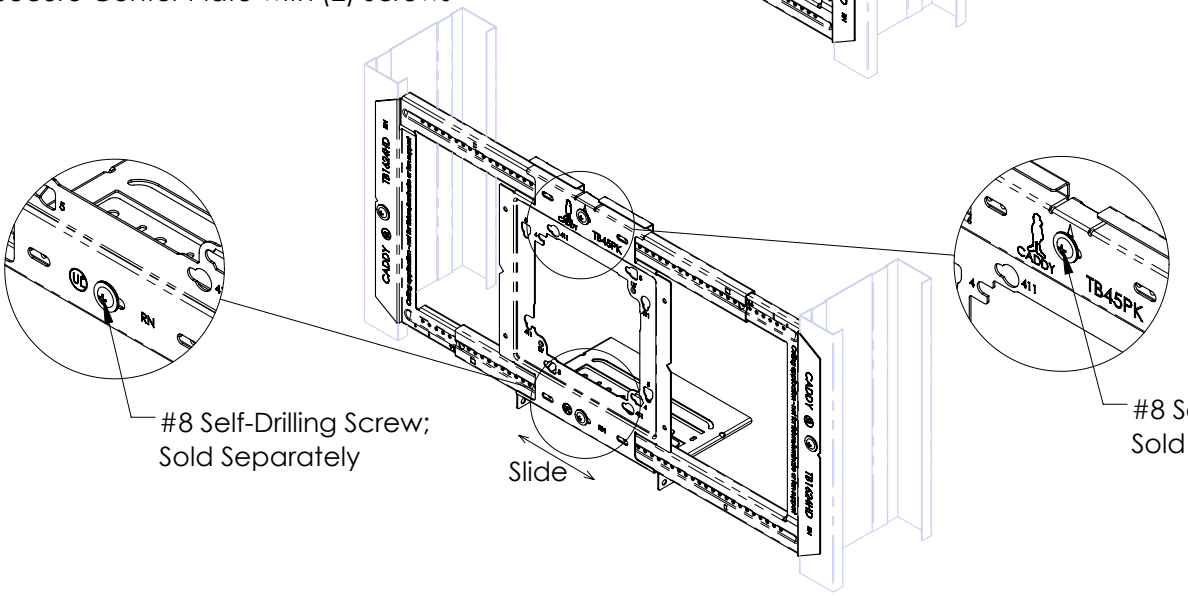

nVent, nVent CADDY, nVent ERICO Cadweld, nVent ERICO Critec, nVent ERICO, nVent ERIFLEX, and nVent LENTON are owned by nVent or its global affiliates. All other trademarks are the property of their respective owners. nVent reserves the right to change specifications without prior notice.

© 2019 - 2021 nVent All Rights Reserved