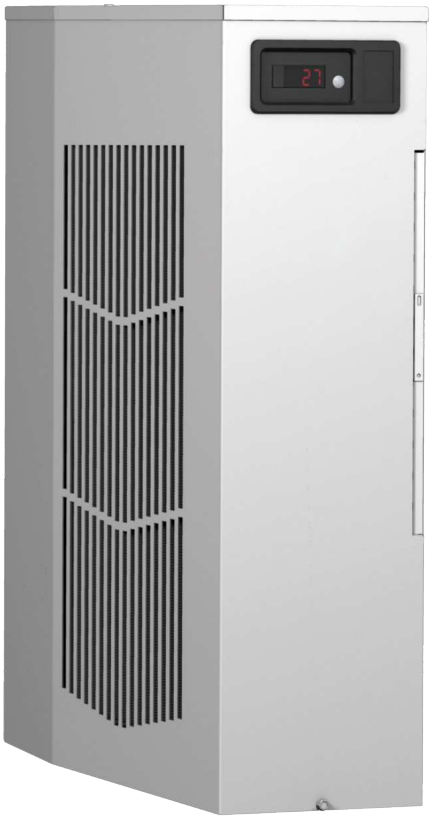

SPECTRACOOL

AIR CONDITIONER, HAZARDOUS LOCATIONS

NHZ28 MODEL

INSTRUCTION MANUAL

Rev. A

© 2022 nVent

P/N 89215757

89215757

TABLE OF CONTENTS

WARRANTY AND RETURN POLICY 3
General Safety Information 3
Receiving the Air Conditioner 3
Handling and Testing the Air Conditioner 4
How to Read Model Numbers 4
Technical Information 4
- General 4
- Sequence of Operation 4
  - Cooling 4
- Standard and Optional Component Operation 5
  - SMART CONTROLLER 5
  - For cooling (75-100 F range) 5
  - Remote Access Control (optional) 5
  - Head Pressure Control (optional) 5
  - 115V/230V to 10V Transformer (optional) 5
- Door Switch 5
- Active Condensate Management 5
- When Used With Purge and Pressurized Enclosures 5
- Schematics and Wiring Diagrams 6
  - Generic 115V Schematic (actual unit options may vary) 6
  - Generic 230V Schematic (actual unit options may vary) 6
  - Generic 460V Schematic (actual unit options may vary) 7
  - Generic 115V Wire Diagram (actual unit options may vary) 8
  - Generic 230V Wire Diagram (actual unit options may vary) 9
  - Generic 460V Wire Diagram (actual unit options may vary) 10

Dimensional Drawing 11
General Safety Information 12
Installation Instructions 12
DIGITAL THERMOSTAT CONTROLLER (OPTIONAL) 14
- Overview 14
- ENERGIZING THE CONTROLLER 14
- CONTROL STATUS INDICATION 14
- DISPLAYING AND CHANGING PROGRAM Settings 17
  - To view or access the settings 17
- Heat/Cool Operating Parameters 17
- Alarm Parameters 17
- DISPLAYING TEMPERATURE DATA ON SCREEN 19
- COMPRESSOR RESTART TIME DELAY 19
- ALARM OUTPUT CONTACT 19
- ALARM INPUT CONNECTION 19
- PRIMARY-SECONDARY (PS) MODE 20
- Connecting units together in Primary/Secondary mode 20
- Connecting units together in Lead/Lag mode 21
- AIR CONDITIONER UNIT REMOTE COMMUNICATION FEATURES 22
  - USB COMMUNICATION 22
  - ETHERNET COMMUNICATION 22
- USING HOFFMAN PC INTERFACE TOOL 23
  - USB COMMUNICATION MODE 23
  - USB COMMUNICATION MODE 24
  - ETHERNET COMMUNICATION MODE 25
- REMOTE ACCESS CONTROL PIN-OUT 26

General Safety Information 27
Maintenance 28
- Compressor 28
- Inlet Air Filter 28
- How To Remove, Clean or Install a New Inlet Air Filter 28
- Condensate Management and Drain Trap Maintenance 28
- Condenser and Evaporator Air Movers 29
- Refrigerant Loss 29
- Refrigerant Properties Chart (R134a) 29
- Unit Characteristics 30
- Functional Data 30

Service Data 31
- Components List 31
- NHZ280416GXXX Pressure Tables 32
- NHZ280426GXXX Pressure Tables 33

F-Gas Information 33
Trouble Shooting 34
- Basic Air Conditioning Trouble Shooting Check List - SMART CONTROLLER 34
- Symptoms and Possible Causes - Remote Access Control Version 35

© 2022 nVent

WARRANTY AND RETURN POLICY

https://hoffman.nvent.com/en/hoffman/warranty-information

GENERAL SAFETY INFORMATION

Please observe the following general safety instructions when assembling and operating the unit:

- Assembling, installing and servicing must only be performed by properly trained specialists.
- When transporting the enclosure with the cooling unit externally mounted, always use an additional shipping brace to support the cooling unit.
- Do not attempt to operate the air conditioner while it is horizontal or on its side, back or front.
- Operation of air conditioner in areas containing airborne caustics or chemicals can rapidly degrade sealing properties of materials, deteriorate filters, refrigeration coils, blowers and motors. Contact nVent Equipment Protection for special recommendations. See Maintenance on page 28.

DANGER

Danger: explosion hazard - do not energize, disconnect, or troubleshoot equipment unless power has been switched off or the area is known to be non-hazardous.

Unit to be installed and maintained by properly trained personnel only.

Danger : Risque d'explosion – Ne pas alimenter, déconnecter ni dépanner l'équipement si l'alimentation n'a pas été coupée ou si la zone n'est pas reconnue comme non dangereuse.

RECEIVING THE AIR CONDITIONER

Inspect the air conditioner. Check for concealed damage that may have occurred during shipment. Look for dents, scratches, loose assemblies, evidence of oil, etc. Damage evident upon receipt should be noted on the freight bill. Damage should be brought to the attention of the delivering carrier -- NOT to nVent Equipment Protection -- within 15 days of delivery. Save the carton and packing material and request an inspection. Then file a claim with the delivering carrier.

nVent Equipment Protection cannot accept responsibility for freight damages; however, we will assist you in any way possible.

CAUTION MISE EN GARDE

This air conditioner is suitable for use in Class 1, Division 2, Groups A,B,C, D T4A hazardous locations, or non-hazardous locations only. It is meant to be installed in an enclosure such that the field wiring and controls are only accessible with the use of a tool.

Do not attempt to operate the air conditioner while it is horizontal or on its side, back or front. The refrigeration compressor is filled with lubricating oil. This will cause permanent damage to the air conditioner and also voids the warranty.

Ce climatiseur peut être utilisé dans des zones dangereuses de Classe 1, Division 2, Groupes A, B, C, D T4A ou des zones non dangereuses uniquement. L'installation doit être effectuée dans une armoire de telle sorte que le câblage et les commandes sur le terrain ne soient accessibles qu'à l'aide d'un outil.

Ne pas essayer de faire fonctionner le climatiseur en position horizontale, ou posé sur le côté, l'arrière ou l'avant. Le compresseur de réfrigération est rempli d'huile lubrifiante. Cela endommagerait le climatiseur de manière permanente et annulerait la garantie.

© 2022 nVent

HANDLING AND TESTING THE AIR CONDITIONER

If the air conditioner has been in a horizontal position, be certain it is placed in an upright, vertical or mounting position for a minimum of five (5) minutes before operating.

TEST FOR FUNCTIONALITY BEFORE MOUNTING THE AIR CONDITIONER TO THE ENCLOSURE.

Refer to the nameplate for proper electrical current requirements, and then wire the unit to a properly grounded power supply using copper conductors only. Power supply wiring should be restrained after field installation to ensure no contact with internal fan. Minimum circuit ampacity should be at least 125% of the amperage shown on the unit nameplate. No other equipment should be connected to this circuit to prevent overloading

Immediately after applying power, the evaporator blower (enclosure air) should start running. Operate the air conditioner with the compressor running for five (5) to ten (10) minutes. You will need to set the cooling thermostat or controller setpoint below the ambient temperature to operate the compressor.

Condenser air temperatures should be warmer than normal room temperatures within a few minutes after the condenser impellers start.

See Sequence of Operation on page 4 for specifics on how the unit operates when powered up.

HOW TO READ MODEL NUMBERS

NHZ28	04	2	6	G300
1	2	3	4	5

1. Identifies the type/family of air conditioner and the approximate height (i.e. NHZ28 = Narrow Hazardous Location family about 28 inches high).
2. This is the air conditioner's listed capacity in BTU/Hr. at rated conditions. (i.e. 06=6,000 BTU/Hr. at 131/131 F)
3. 1 = 115 Volt, 2 = 230 Volt, 4 = 460 Volt.
4. 6 = 50/60 Hz or 60 Hz only.
5. Unique set of numbers for each air conditioner which identifies the accessories on a model.

TECHNICAL INFORMATION

GENERAL

Sensor 2 monitors the enclosure return air temperature to prevent ice buildup on the evaporator coil. If the air temperature drops below -1 C, the compressor and condenser air mover(s) shut off. They turn back on when the temperature rises above 15 C.

The compressor and the air movers are equipped with overload protection to guard against excess current and temperatures.

SEQUENCE OF OPERATION

The air conditioner comes standard with smart controller. During cooling modes, the evaporator fan will be running.

COOLING

When the enclosure temperature is above the cooling set-point plus the cooling differential, the smart controller will call for cooling. The compressor is then energized through a solid state relay or contactor. The condenser impellers will start immediately if the unit is not equipped with an optional head pressure control switch. If the unit is equipped with an optional head pressure control switch, the condenser impellers will start once the refrigerant pressure reaches the pressure setting of the switch. Component specific information is listed below.

Operating the air conditioner below the minimum ambient temperature or above the maximum ambient temperatures indicated on the nameplate voids all warranties. DO NOT adjust cooling set-point to a temperature lower than 70 F. Doing so can increase the likelihood of frost buildup on the evaporator coil.

The moisture that the enclosure air can contain is limited. If moisture flows from the drain tube continuously this can only mean that ambient air is entering the enclosure. Be aware that frequent opening of the enclosure's door admits humid air that the air conditioner must then dehumidify.

© 2022 nVent

STANDARD AND OPTIONAL COMPONENT OPERATION

SMART CONTROLLER

The standard NHZ28 air conditioner uses our standard smart controller. The setpoint equals the temperature that the air conditioner turns off. The controller has a 7 F differential from setpoint until it calls for cooling. An example of operation is shown below.

FOR COOLING (75-100 F RANGE)

- Thermostat setpoint = 80 F
- Cooling turns on at 87 F
- Cooling turns off at 80 F

REMOTE ACCESS CONTROL (OPTIONAL)

See Remote Access Control (optional) on page 5

HEAD PRESSURE CONTROL (OPTIONAL)

Unit is set at the factory, no adjustment necessary.

At a saturated condenser temperature of 85 F (95 psig), the condenser fans will power off. At a saturated condenser temperature of 117 F (165 psig), the condenser fans will power on.

115V/230V TO 10V TRANSFORMER (OPTIONAL)

This transformer powers the thermal display.

DOOR SWITCH

Several door switches may be connected in series and operated on one cooling unit. The door switch only supports a floating connection,no external voltages. Remove jumper from terminals 3 and 4 of the connector and connect the door switch to the two terminals if a door switch is available.

ACTIVE CONDENSATE MANAGEMENT

At low temperatures and high humidity levels inside the enclosure, condensation may form on the evaporator coil.

The air conditioner will continuously evaporate the water that may be in the drain pan due to condensation from the evaporator coil into the external air stream. Excess condensate is routed downwards out of the air conditioner via a tube fitting at the bottom of the condenser side of the unit. A 10 mm inside diameter tube can be attached to the fitting and routed to a nearby drain.

WHEN USED WITH PURGE AND PRESSURIZED ENCLOSURES

This air conditioner will operate safely in a Class 1 Division 2 Groups A, B, C and D hazardous location on both exterior and interior sides. It does not require a purge and pressurized enclosure, but if it is to be installed on one, the following should be considered.

The active condensate management system functionally described above is possible due to a drain trap directly connecting and routing condensation from the evaporator coil pan to the ambient side where it collects in the condensate evaporator pan.

During initial purging of an enclosure or after long periods of operation in a pressurized system utilizing a dry protective and/or inert gas supply, the drain trap can eventually dry out and allow a small amount of protective gas to leak outward of the enclosure through the drain trap. A leakage should not immediately be associated with a hazardous condition. If continuous positive pressure is maintained inside an enclosure, the protective gas will leak out to ambient and prevent hazardous gasses from entering. A typical enclosure pressurization system can compensate for this and maintain proper enclosure pressure.

If the pressurization system cannot compensate for the additional leakage, a drain trap seal can be created by priming the air conditioner drain. This can be done by de-energizing and opening the enclosure for access to the evaporator coil, and carefully pouring clean water (approx. 1 cup) into the face of the coil. With water present, the drain trap should be fully primed and sealed. Opening the enclosure can also introduce humidity back into the enclosure which will eventually condense on the evaporator coil and become part of the seal in the drain trap.

© 2022 nVent

SCHEMATICS AND WIRING DIAGRAMS

GENERIC 115V SCHEMATIC (ACTUAL UNIT OPTIONS MAY VARY)

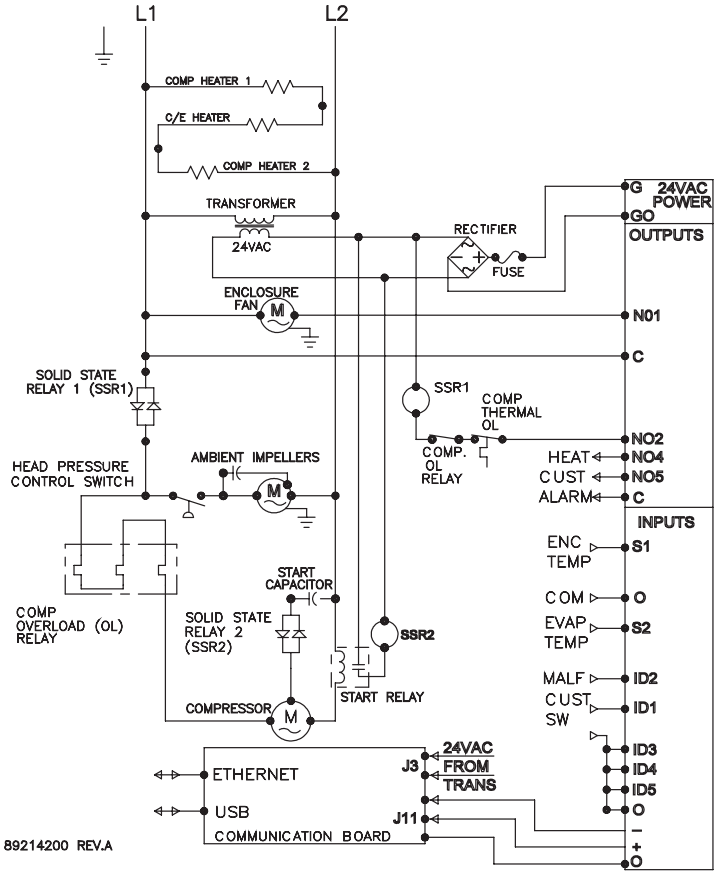

GENERIC 230V SCHEMATIC (ACTUAL UNIT OPTIONS MAY VARY)

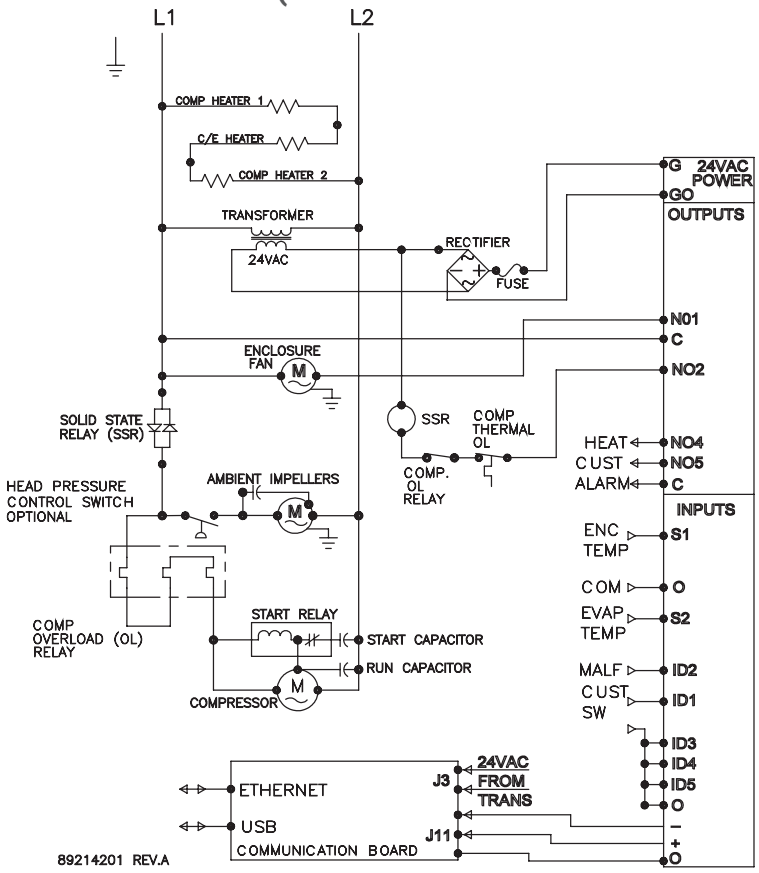

© 2022 nVent

GENERIC 460V SCHEMATIC (ACTUAL UNIT OPTIONS MAY VARY)

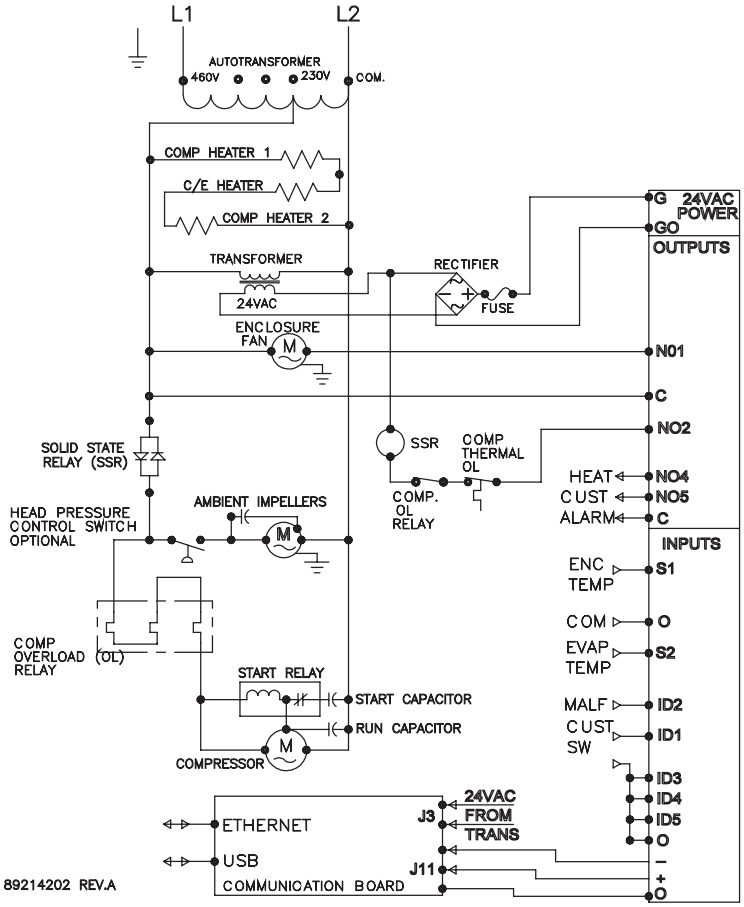

© 2022 nVent

GENERIC 115V WIRE DIAGRAM (ACTUAL UNIT OPTIONS MAY VARY)

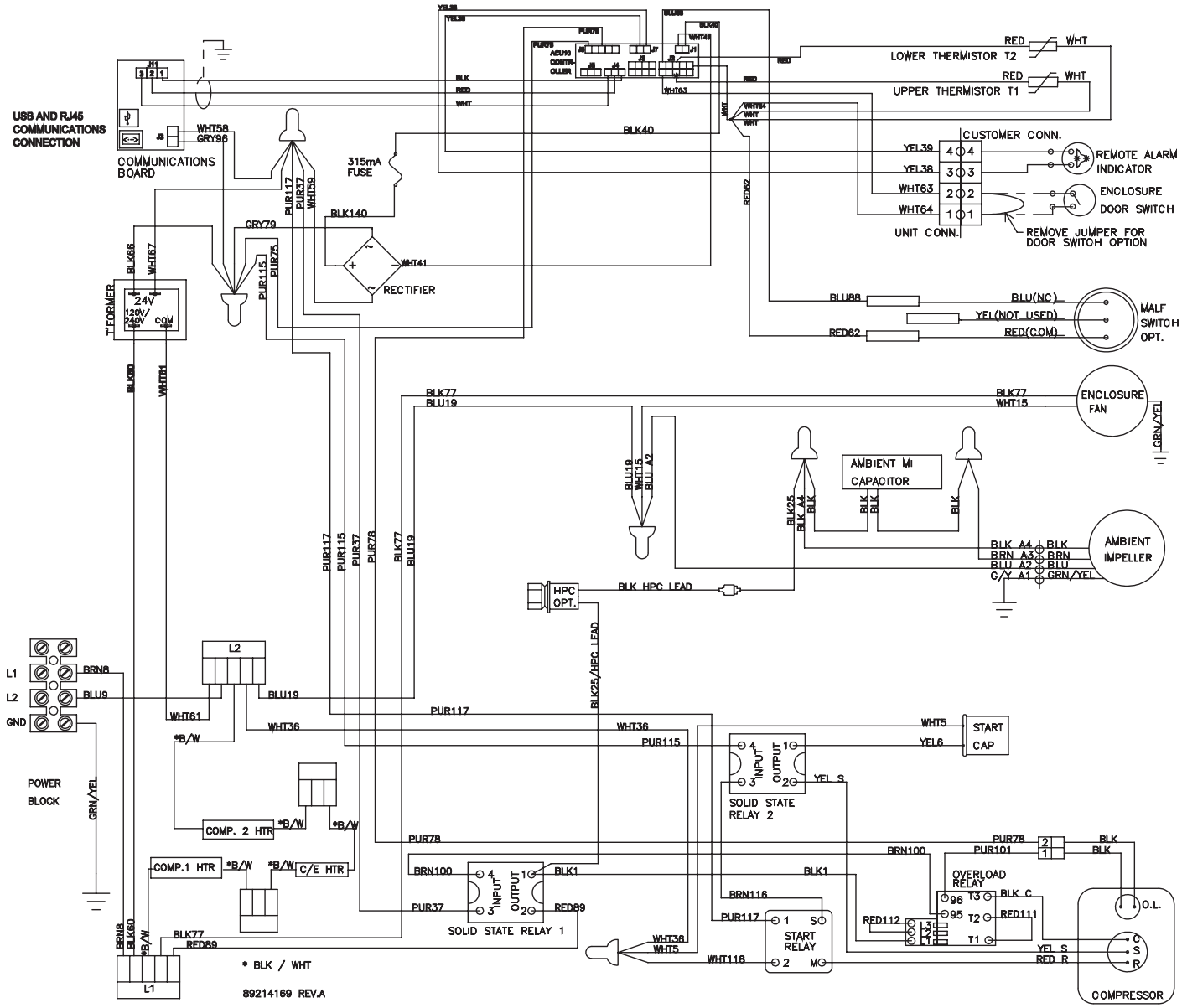

© 2022 nVent

GENERIC 230V WIRE DIAGRAM (ACTUAL UNIT OPTIONS MAY VARY)

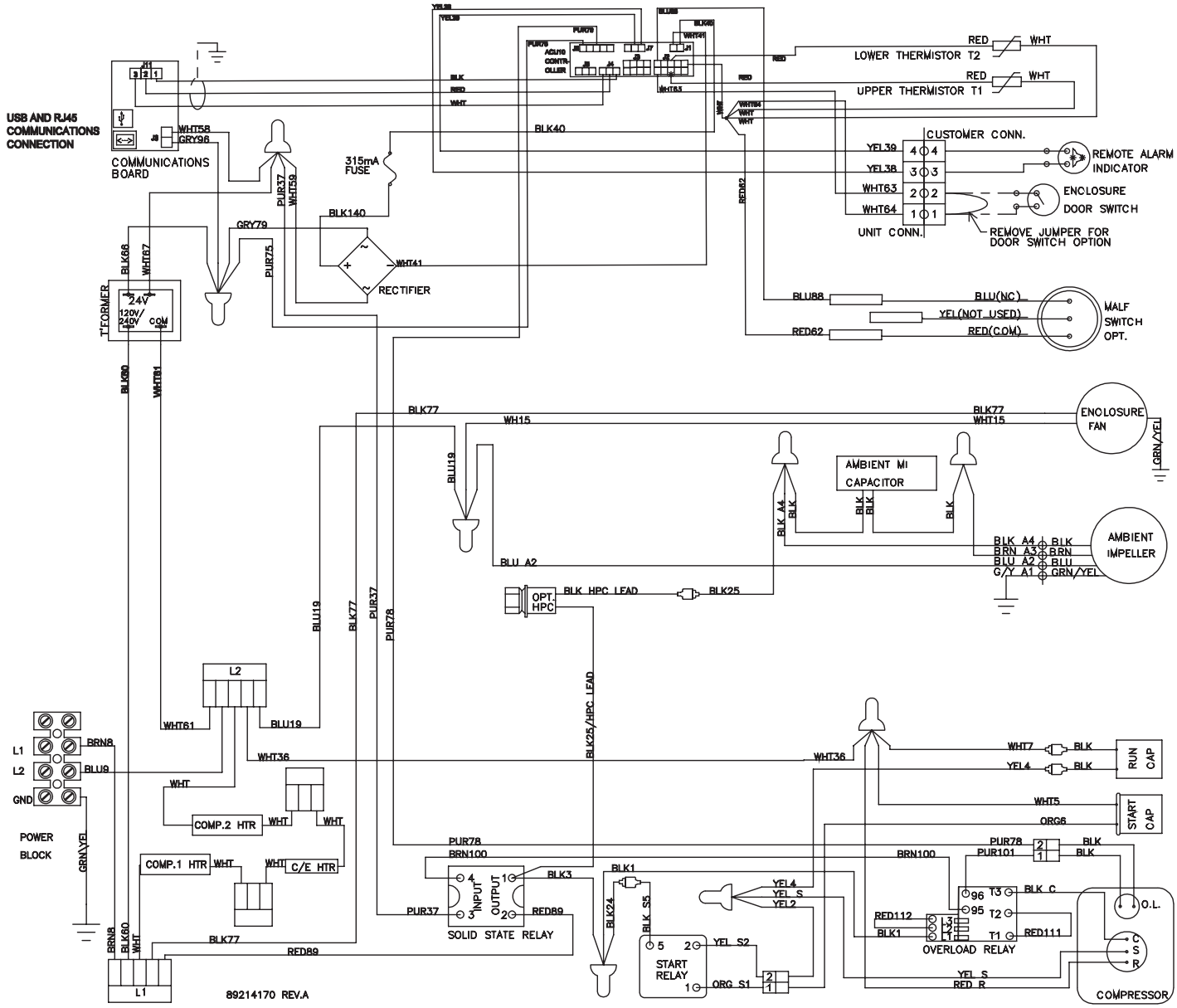

© 2022 nVent

GENERIC 460V WIRE DIAGRAM (ACTUAL UNIT OPTIONS MAY VARY)

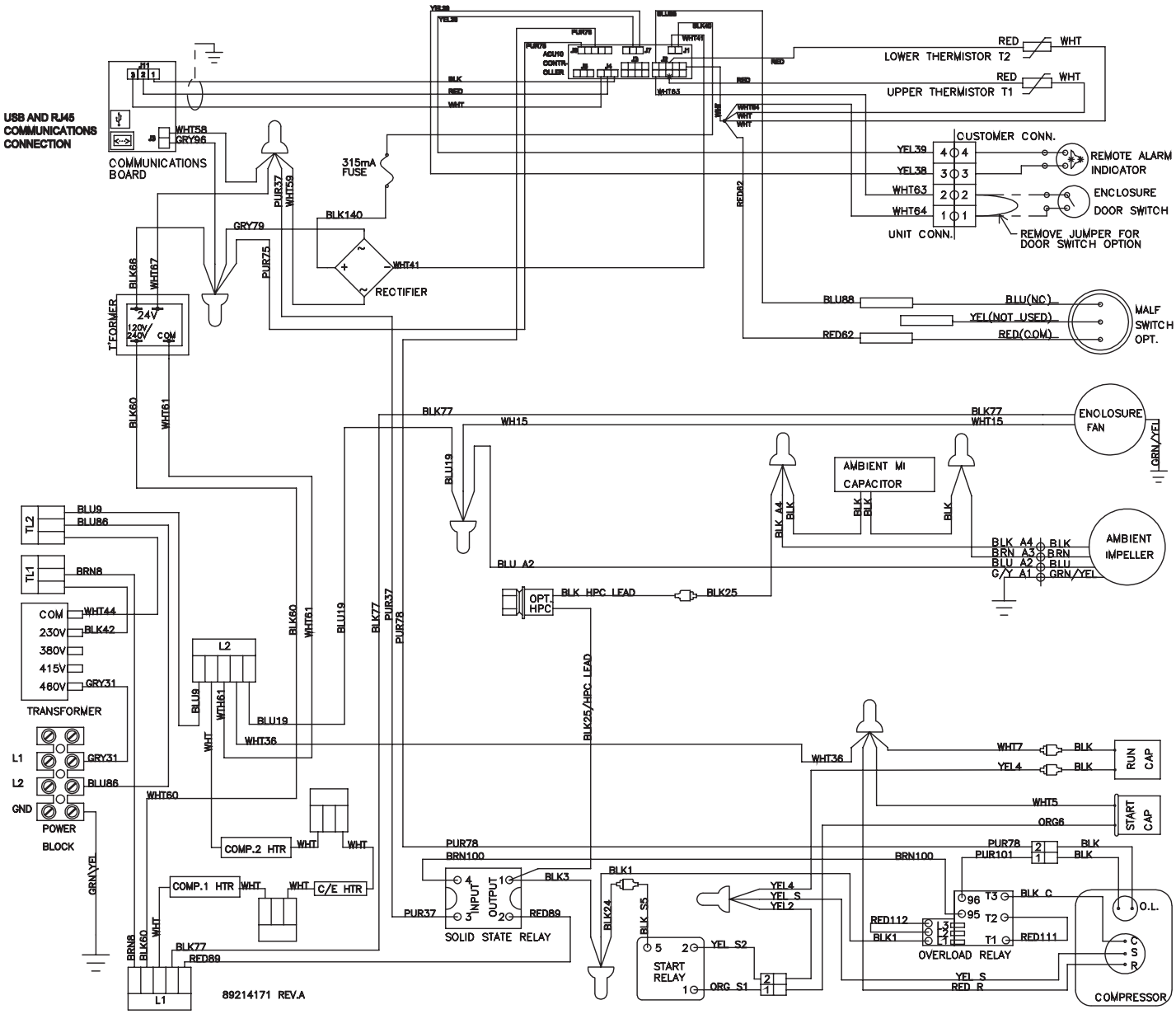

© 2022 nVent

DIMENSIONAL DRAWING

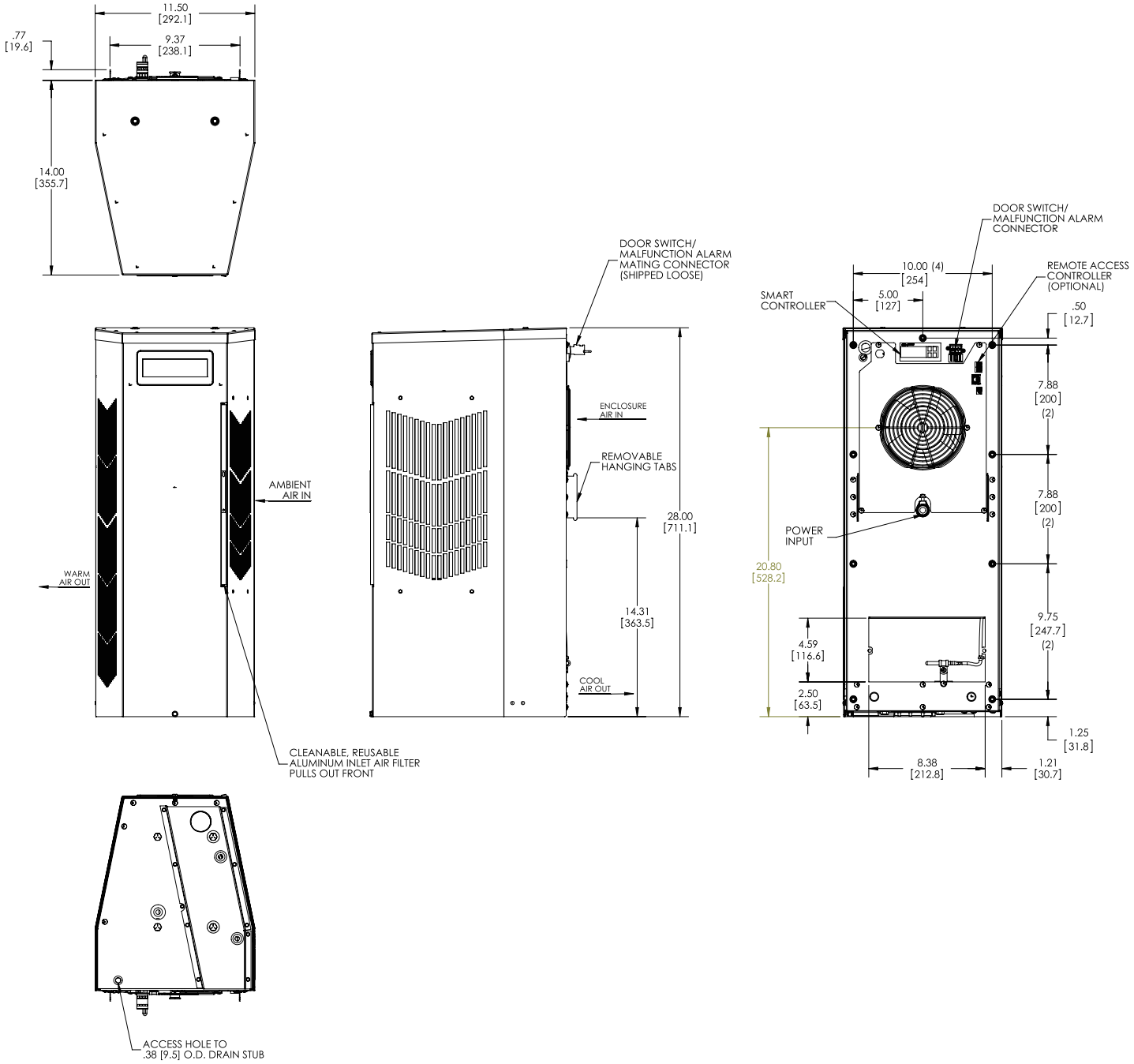

© 2022 nVent

GENERAL SAFETY INFORMATION

Please observe the following general safety instructions when assembling and operating the unit:

- Assembling, installing and servicing must only be performed by properly trained specialists.
- When transporting the enclosure with the cooling unit externally mounted, always use an additional shipping brace to support the cooling unit.
- Do not attempt to operate the air conditioner while it is horizontal or on its side, back or front.
- Operation of air conditioner in areas containing airborne caustics or chemicals can rapidly degrade sealing properties of materials, deteriorate filters, refrigeration coils, blowers and motors. Contact nVent Equipment Protection for special recommendations. See Maintenance on page 28.

DANGER

Danger: explosion hazard - do not energize, disconnect, or troubleshoot equipment unless power has been switched off or the area is known to be non-hazardous.

Unit to be installed and maintained by properly trained personnel only.

Danger: Risque d'explosion – Ne pas alimenter, déconnecter ni dépanner l'équipement si l'alimentation n'a pas été coupée ou si la zone n'est pas reconnue comme non dangereuse.

INSTALLATION INSTRUCTIONS

1. Refer to nameplate for hazardous location rating.
2. Install a suitable switch to de-energize the air conditioner for repairs or remove the fuse.
3. Inspect the air conditioner and verify correct functionality before mounting the air conditioner. See Handling and Testing the Air Conditioner on page 4.
4. Using the mounting gasket kit provided with the unit, install gaskets to the air conditioner.
5. When considering a location for the unit, it is recommended that a six (6) inch clearance be maintained on at least one side of the air conditioner. It is also recommended that twenty (20) inches of clearance be allowed from the front of the unit for cover removal.
6. Figure 1 and the cutout template included with the unit will assist in preparing the enclosure for installation of the unit. NOTE: Mount the unit within 3° from vertical.
7. Mount air conditioner on enclosure taking care not to damage the mounting gasket. The mounting gasket is the seal between the air conditioner and the enclosure. Avoid dragging the air conditioner on the enclosure with the mounting gasket attached as this could cause rips or tears in the gasket and risk losing the water tight seal.
8. To avoid cross-threading mounting inserts, start bolts by hand before tightening with a wrench or ratchet driver.
9. Allow unit to remain upright for a minimum of five (5) minutes before starting. CAUTION! Air conditioner must be in upright position during operation.
10. Refer to the nameplate for electrical requirements. Wire the unit to a properly grounded power supply. Electrical circuit should be fused with slow blow or HACR circuit breaker.
11. Adjust the controller to the desired cabinet temperature. Refer to DISPLAYING AND CHANGING PROGRAM Settings on page 17 for controller adjustments and operation.

© 2022 nVent

⚠ CAUTION MISE EN GARDE

The unit is meant to be installed in an enclosure suitable for the environment listed previously and such that the field wiring and controls are only accessible with the use of a tool.

When installed on an enclosure, only the front/face side, ambient air in, and ambient air out can be exposed to the environment.

L'unité doit être installée dans une armoire adaptée à l'environnement susmentionné et de telle sorte que le câblage et les commandes sur le terrain ne soient accessibles qu'à l'aide d'un outil.

Lors d'une installation sur une armoire, seule la face avant/latérale, l'entrée d'air ambiant et la sortie d'air ambiant peuvent être exposées à l'environnement.

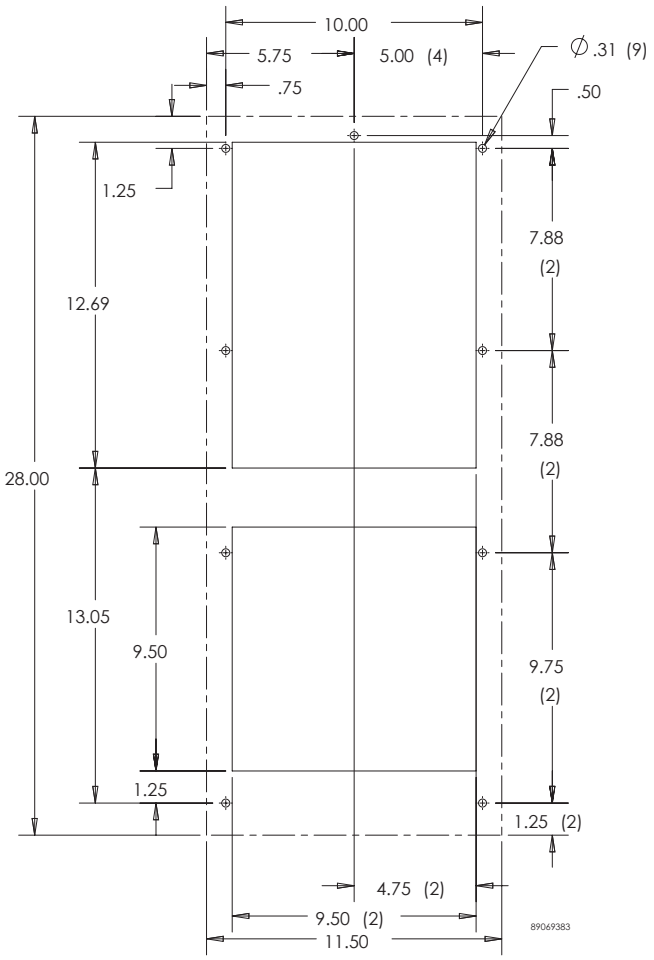

Surface Mount

Figure 1
Cut-out Drawing

© 2022 nVent

DIGITAL THERMOSTAT CONTROLLER (OPTIONAL)

OVERVIEW

The digital thermostat (controller) is a parametric controller for the complete management of air conditioners. All settings are pre-programmed at the factory. Cooling/heating setpoint, cooling/heating differential and high/low temperature setpoint are designed to be adjustable by the operator. All alarms are outputted through the alarm relay. In addition, if Hoffman network card (Remote Access Control (RAC) Module) is used the parameters that state above and alarms are accessible remotely through Ethernet connection utilizing SNMP, Modbus TCP, EtherNet/IP, and Profinet protocol . A USB connection from the network card is also provided with accessibility to the digital thermostat controller utilizing Modbus RTU and RS-845 serial bus. In addition, the USB connection is also used to read the network information from the Hoffman network card and temperature setpoints and alarm from the controller. Note that Hoffman network card (RAC module) is acting as a gateway to the digital thermostat where temperature setpoints and alarm can be viewed and/or changed remotely.

Note: nVent Hoffman network card (RAC module) is an optional accessory, therefore, some of the air conditioners ship without the network card but it is upgradable upon request.

ENERGIZING THE CONTROLLER

The digital controller is wired and programmed at the factory to operate when power is applied to the air conditioner. In normal condition, the evap fan starts operating after the completion of the self-evaluation which is less than 30 seconds and fan icon should be illuminated along with the inlet and outlet temperature data (if an option outlet temperature sensor is installed).

CONTROL STATUS INDICATION

The display has numerous symbols to indicate the various controller functions such as cooling, heating, alarming, evaporator fan, and heating. Indicators (icons) are steady illuminated on screen when active.

Figure 2
Display

© 2022 nVent

KEYPAD

SYMBOL	COLOR	ICON INDICATION	ICON STATUS
	Red	Alarm - active when alarm is detected	Flashing when alarm is detected
	White	Keypad **Select** – access to passcode , hold 5 sec to turn unit ON/OFF, parameter menu, parameter setting, write or save to EEPROM, and hold for 3sec to return to main screen	ON
	White	Keypad **Up** – navigate to previous parameter and increasing parameter variable	ON only when reviewing parameters
	White	Keypad **Down** – navigate to next parameter and decreasing parameter variable, all inputs, unit status.	ON

MAIN FIELD

SYMBOL	COLOR	ICON INDICATION	ICON STATUS
°C	White	When operating temperature in degrees Celsius	ON
°F	White	When operating temperature in degrees of Fahrenheit	ON
Main Field Line 1	White	Display inlet temperature	ON
Main Field Line 2	Orange	1. Display outlet temperature in standalone mode if outlet sensor is present 2. Displays device ID for primary-secondary mode up to 10 units, 1:10 … 10:10 or lead-lag mode up to 2 units, 1:2… 2:2	ON

ICONS

SYMBOL	COLOR	ICON INDICATION	ICON STATUS
	White	Compressor Running	• Flashing while waiting for compressor to turn ON • Steady ON while compressor is running
	White	Evaporator Running	ON
	White	Electric heater ON	ON
	White	Primary and/or lead controller	ON
	White	Freeze control	Compressor and Condenser fan OFF while illuminated
	White	Power ON	ON

© 2022 nVent

Home Screen
Inlet Temp
Outlet Temp
Evap fan icon
Compressor icon
Heater icon
Unit of measure
Power ON icon
Program
Read ID & Sensor
S1 Inlet Sensor
S2 Outlet Sensor
ESC Escape

Passcode Screen	
PSd	0002 or 0022
ESC	Escape

Passcode 0002	
ALrF	Alarm Folder
AHiF	Alarm History Folder
PArF	Parameter Folder
rtCL	Real Time Clock Folder
rStF	Reset
UnF	Unit of Measure (°C or °F)
FrF	Firmware Revision Folder
LOG Out	Log Out of program mode

ArOP	Alarm Relay Output Setting
dO	Door Open Alarm Setting
Ht	High temperature alarm setpoint
Lt	Low temperature alarm setpoint
rH	Relative Humidity alarm setpoint
ESC	Escape

CSt	Cooling Setpoint
Cd	Cooling Differential
Cd2	Cooling Differential 2
HSt	Heating Setpoint
Hd	Heating Differential
H25	Internal Buzzer Configuration
ESC	Escape

t01	Unit of hour
t02	Unit of minute
t03	Unit of year
t04	Unit of month
t05	Unit of day
SET	Save
ESC	Escape

rSAL	Reset or Clear alarms
rSPA	Reset parameters to default
ESC	Escape

H13	°C = 0; °F = 1
ESC	Escape

Fr	Firmware revision
ESC	Escape

© 2022 nVent

DISPLAYING AND CHANGING PROGRAM SETTINGS

TO VIEW OR ACCESS THE SETTINGS

TO ACCESS FOLDER MENUS:

1. Press button to display passcode screen, the screen displays **PSd** on line 1 and **0000** on line 2.
2. Press button to access to passcode , the first digit of **0000** is flashing and press 3 more times until the last digit of **0000** flashes.
3. Press arrow two times to change the 0 to 2. Press for access to folder menus.

   Note: to exit the security level to the main screen wait one minute with no action or Press arrow until **LOG Out** message displays, then press button.

TO CHANGE A PARAMETER SETTING

1. Once in the folder menu navigate to the desired setting to be changed using the arrow to scroll and button to access a menu or parameter.
2. To change a parameter Press button and parameter value will begin to flash.
3. Press / arrow to the desire value.
4. Press button to save the setting and the screen will revert to the parameter mnemonic.

   Note: if button is not pressed, the new setpoint is not saved.

   To exit the parameter settings to the main screen wait one minute with no action or Press arrow few times until **ESC** displays, then press button to return to **UoF** screen. From the **UoF** screen Press arrow few times until **LOG Out** message displays, then press button to return to the main screen.

   Selecting ESC returns to folder menu.

   Selecting LOG out returns to main screen.

HEAT/COOL OPERATING PARAMETERS

Mnemonic Parameter	Description	Default Value	Range
CSt[1]	Cooling setpoint	80 F	72 F to 120 F
Cd (Cd1)[1]	Cooling differential	7 F	2 F to 25 F
Cd2[4]	Cooling differential 2	15 F	
HSt[2 3]	Heating setpoint	50 F	45 F to 60 F
Hd[3]	Heating differential	7 F	2 F to 25 F

1 Compressor or cooling turns ON at CSt + Cd and OFF at CSt

2 Heater or heating turns ON at HSt and OFF at HSt + Hd

3 Heating mode is only applied to a unit with heater option

4 Cooling differential 2 is only applied to 2-stage compressor and lead-lag application

ALARM PARAMETERS

Mnemonic Para	Description	Default value
Ht	High temperature alarm setpoint	125 F
Lt	Low temperature alarm setpoint	40 F
dO	Door open alarm setting	NC
ArOP	Alarm relay output	NO

NOTES: (4) The alarm relay output logic is designed to be configurable

© 2022 nVent

VIEW ALARMS

Alarms may be viewed when the alerting icon ⚠ is flashing.

1. On the main screen, press the alerting icon ⚠ button
2. The screen displays the most recent or newest alarm where the alarm code display on line 1 and the alerting icon ⚠ is now in steady
3. Press ↑ arrow to view next alarm if there are more than one
4. Press ↓ arrow to display **ESC**, then press ◎ button to return to the main screen

VIEW THE ALARMS IN THE ALARM HISTORY FOLDER

1. Follow instructions above to enter the passcode and open the alarm history folder **(AHiF)**.
2. Press ◎ button to access to the alarm history.
3. Press ↓ arrow to display the mnemonic alarm on line 1 and time, month, and day display on line 2. For example, low temp alarm **(Lt)** displays on line 1 and 09:24 and 0706 display on line 2 in sequence. Note that the time, and date recorded in the alarm history is based on the local real-time-clock if configured after installation.
4. Press ↓ arrow to view next alarm. The controller is able to retain up to 25 events
5. Press ↑ ↓ arrow until the screen displays **ESC**, then press ◎ button to return to the main screen or if no action for longer than 60 seconds the screen will be automatically revert to the main screen.

   NOTE: if no alarms are present then only **ESC** will be displayed in the folder.

   There are seven possible alarms (non-latching) detectable by the controller and are indicated on the controller display. All alarms are accessible locally. If a Hoffman network card (RAC module) is used, alarms are also accessible remotely through the Ethernet and USB connection.

Mnemonic Alarm	Description	Cause	Result	Alarm Relay Output
dO	Door open alarm	Enclosure door opens or not properly close	Compressor and evap fan turn OFF in duration of alarm	Closed
S1F	Inlet temperature sensor fault	Inlet temp probe failed	No effect on function, controller continue operating as normal using outlet sensor with setpoint of 50 F	Closed
S2F	Outlet temperature sensor fault	Outlet temp probe failed	No effect on function but loss freeze protection	Closed
LA	Malfunction alarm	MALF high pressure switch opens	No effect on function	Closed
Ht	High temp warning	Enclosure air exceeds high temp alarm setpoint	No effect on function	Closed
Lt	Low temp warning	Enclosure air drops below low temp alarm setpoint	No effect on function	-
FA	Frost alarm	Evaporator coil freezes	Compressor and condenser fan turns OFF for the duration of alarm. Alarm clears when the outlet temperature sensor reaches 59 F	Closed

© 2022 nVent

TO RESET THE ALARMS IN ALARM HISTORY FOLDER

The controller is designed with ability to reset or clear the alarm history

6. Follow instructions above to enter the passcode and open the reset folder **(rStF)**.
7. The screen displays **rSAL** on line 2 and **nO** on line 1, press button the **nO** is flashing
8. Press arrow to change **nO** to **YeS**, then press button reset the alarms. The screen flashes once and returns to **rSAL** with **nO** one line 2
9. Press arrow to navigate to **ESC**, then press to returns to **rStF** screen.
10. Press arrow to navigate to **LOG Out**, then press button to return to the main screen or if no action for longer than 60 seconds the screen will be automatically reverted to the main screen.

TO RESET PARAMETERS TO FACTORY DEFAULT

This option is ONLY applied if the operator wants to reset all control parameters back to factory default.

1. Follow instructions above to enter the passcode and open the reset folder (rStF).
2. The screen displays rSAL, press arrow to navigate to rSPA and then press button
3. The screen displays rSPA one line 1 and the word nO on line 2 in steady state, press button and then the word nO is flashing and ready to change
4. Press arrow to change nO to YES. Press button the screen displays PSd with 0000 on line 2
5. Press button to enter to passcode. Press button few times until the last digit of 0000 flashing
6. Press arrow to change 0 to 2, press button to authorize the reset of the parameters
7. The screen returns to rSPA screen in steady state.
8. Press arrow to navigate to ESC, then press to returns to rStF screen.
9. Press arrow to navigate to LOG Out, then press button to return to the main screen or if no action for longer than 60 seconds the screen will be automatically reverted to the main screen.

DISPLAYING TEMPERATURE DATA ON SCREEN

There are two temperature probes in the air conditioner where one is reading the enclosure air temperature incoming to the air conditioner and other is reading the cooled air leaving the air conditioner and entering the enclosure. Both temperature data are displayed on the screen where line 1 is the reading of the inlet temperature and line 2 is the reading of the outlet temperature.

COMPRESSOR RESTART TIME DELAY

A factory set 3 minute (180 seconds) restart delay exists to reduce residual back pressure before allowing the compressor to restart. The compressor will stay off for the entire restart duration after the compressor is disabled. A flashing compressor icon on the display indicating that the unit is in a compressor restart delay mode while calling for cooling or waiting for compressor to turn ON.

ALARM OUTPUT CONTACT

The digital controller has a normally open dry contact alarm output with a resistive load rating of 250VAC @ 5 amps max. The two yellow 18 AWG wires located at the back of the air conditioner provide a connection to this output. **Note: do not apply power to this normally open dry contact (two yellow 18 AWG wire)**. This alarm relay output is configurable and provides user with the ability to change the configuration to support their external device. Parameter C21 controls the alarm relay output logic and can be accessed through security code “0022” in the PArF folder.

Para	Description	Configuration
C21	Alarm relay output logic	0 = normally open (NO) – factory default 1 = normally closed (NC)

ALARM INPUT CONNECTION

The digital controller can accept a dry contact/switch input via the two 18 AWG white wires located at the back of the air conditioner. This input is associated with the controller display alarm mnemonic dO (door open). To use this feature, remove the splice connector, and connect the two white wires to customer supplied enclosure door switch in its place. **Note: do NOT apply power to this dry contact input**.

© 2022 nVent

PRIMARY-SECONDARY (PS) MODE

Note: during normal operation, in both the primary-secondary (PS) and lead-lag (LL) operating modes, line 2 displays the device ID, not the outlet temperature. The outlet temperature can be viewed on line 1 by pressing ↓ arrow.

Primary-secondary (PS) mode shares the same hardware and source code as standalone mode, but offers more functionality and features. The controller ships from the factory in Standalone Mode. PS mode is configured manually in the field after the installation. This option allows the user to operate the air conditioner in a group network with up to 10 units. To support PS mode, three parameters, **H01**, **H02**, and **H03** need to be configured. **H01** specifies the operating mode, **H02** specifies the device ID, and **H03** specifies the total number of the units in the group network.

Before configuring to operate in PS mode, the user should understand the functionality of the PS mode.

1. In the PS mode, all units operate off the cooling/heating setpoint and differential of the primary unit. The system prevents setpoint changes from secondary units.
2. The primary unit monitors the enclosure temperatures of all the units and manages the ON/OFF status of cooling and heating based on the unit reporting the highest temperature.
3. When cooling is initiated the primary unit energizes first. Secondary units are energized sequentially at 10 second intervals. When heating is initiated all units turn on heat together. When cooling or heating is satisfied all units turn off together.
4. If the number of units communicating on the network doesn't match the value in H03 then the primary unit will display alarm LC, and the secondary units will display alarm LC1 until the communication re-established.
5. Any unit that loses communication with the primary unit will enter standalone mode and continue operating based on its own temperature probe until communication is re-established.
6. All temperature setpoints and alarms can be viewed remotely if one of the ACUs is equipped with Hoffman network card (RAC module).
7. Best recommendation is to configure the ACU that has Hoffman network card to be the primary one.

CONNECTING UNITS TOGETHER IN PRIMARY/SECONDARY MODE

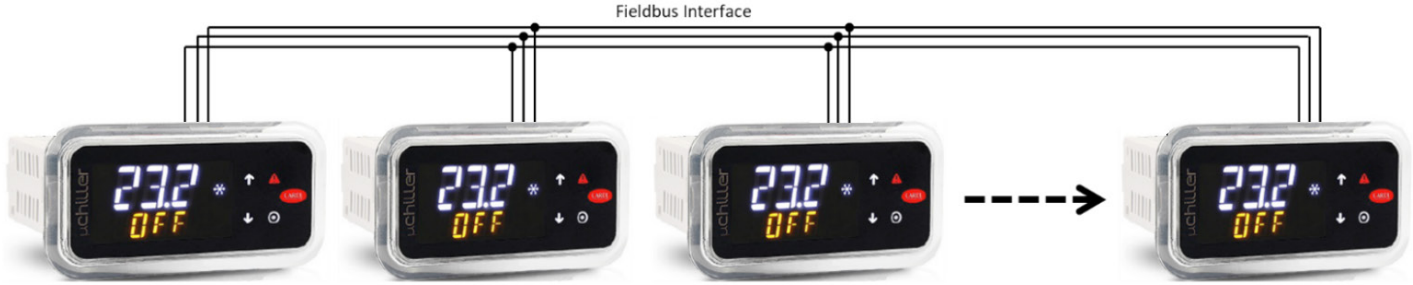

Primary - Device ID 1 | Secondary - Device ID 2 | Secondary - Device ID 3 | Secondary - Device ID 10

Figure 3
Primary-secondary network connectivity

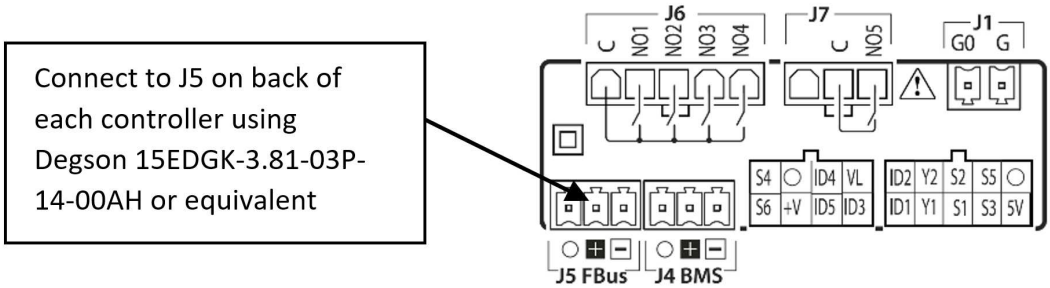

© 2022 nVent

TO CONFIGURE THE CONTROLLER FROM SINGLE MODE TO PS MODE, SIMPLY FOLLOW BELOW PROCEDURES

1. Before proceeding the PS mode configuration for each controller, make sure that the communication cable is connected from one ACU to another using a shielded cable with the shield grounded.
2. Press button to display passcode screen, the screen displays **PSd** on line 1 and **0000** on line 2.
3. Press button to access to passcode , the first digit of 0**000** is flashing and press 2 more times until the third digit 00**0**0 flashes. Press arrow two times to change **0** to **2**, then press button to move to the last digit **002**0
4. Press arrow two times to change the 0 to 2.
5. Press button to access to folder menu and then, the screen displays **ALrF**
6. Press arrow to navigate to **PArF**, then press button to access to parameter menu
7. The screen displays **C**, press arrow to navigate to parameter **H** and then, press button to access to parameter **H** menu

Parameter	Description	Available Range	PS Settings	Default
H01	Mode	SA (stand alone)	PS (primary-secondary)	SA
		PS (primary-secondary)		
		LL (lead-lag)		
H02	Device ID	1 up to 10	1 up to H03	1
H03	Total number of the units in the group network	1 up to 10	2 up to 10	1

8. Set parameter **H01** to **PS** (primary-secondary).

   Note that after **H01** = **PS**, the snowflake icon is illuminated and line 2 changes its display information from outlet temperature to device ID, for example, line 2 displays **01:02** where 01 indicates controller #1 and 02 indicates the total number of the controllers in a group network. Keep in mind that the snowflake icon only illuminates on primary controller.

9. Set parameter **H02** (device ID) to 1 to 10. This device ID will be different for each controller that is connected. The controller set to 1 will be the primary controller. Use numbers sequentially and don't skip using a number.
10. Set parameter **H03** (total number of controllers connected) to 1 to 10.

CONNECTING UNITS TOGETHER IN LEAD/LAG MODE

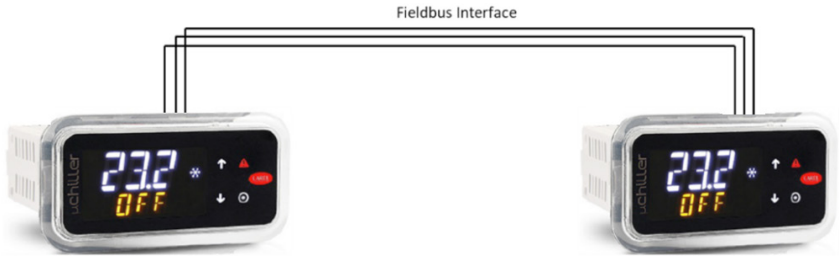

Lead - Device ID 1

Lag - Device ID 2

Figure 4
Lead-Lag network connectivity

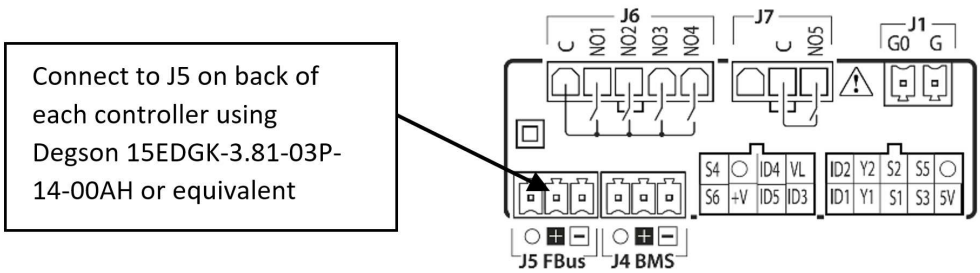

© 2022 nVent

TO CONFIGURE THE CONTROLLER FROM SINGLE MODE TO LL MODE, SIMPLY FOLLOW BELOW PROCEDURES. PERFORM THIS CONFIGURATION FOR BOTH AIR CONDITIONERS.

1. Before proceeding the LL mode configuration for each controller, make sure that the communication cable is connected from one ACU to another using a shielded cable with the shield grounded.
2. Press button to display passcode screen, the screen displays **PSd** on line 1 and **0000** on line 2.
3. Press button to access to passcode, the first digit of 0**000** is flashing and press 2 more times until the third digit **00**0**0** flashes. Press arrow two times to change **0** to **2**, then press button to move to the last digit **002**0.
4. Press arrow two times to change the 0 to 2.
5. Press button to access to folder menu and then, the screen displays **ALrF**.
6. Press arrow to navigate to **PArF**, then press button to access to parameter menu.
7. The screen displays **C**, press arrow to navigate to parameter **H** and then, press button to access to parameter **H** menu.

Parameter	Description	Available Range	LL Settings	Default
H01	Mode	SA (stand alone) PS (primary-secondary) LL (lead-lag)	LL (lead-lag)	SA
H02	Device ID	1 up to 10	1 or 2	1
H03	Total number of the units in the group network	1 up to 10	2	1
H14	LL strategy selection	0-250	0 (Alternate each cycle) 1-250 (Alternate hours)	0

8. Set parameter **H01** to **LL** (lead-lag).
9. Set parameter **H02** (device ID) to 1 for one unit and 2 for the other unit.
10. Set parameter **H03** (total number of controllers connected) to 2.
11. Set parameter H14 (LL strategy selection) to 0 to 250. This is the run time in hours before ACU1 and ACU2 will alternate being the lead unit. When set to zero ACU1 and ACU2 will automatically alternate every cycle.

AIR CONDITIONER UNIT REMOTE COMMUNICATION FEATURES

Air conditioners that include the optional Hoffman network card (RAC module) have remote communication capabilities utilizing SNMP, Modbus TCP, EtherNet/IP, Profinet Protocol via Ethernet connection, and Modbus RTU protocol via USB connection. nVent provides Windows interface application software that is available to download free from nVent support link https://go.nvent.com/remote-access-control-support-center. The Windows interface application software supports both Ethernet and USB communication.

USB COMMUNICATION

This communication mode allows direct connection from a laptop (or PC) to the air conditioning unit using a Mini-b USB cable. As stated above, Modbus RTU is used to communicate between the two devices via USB connection.

ETHERNET COMMUNICATION

This communication mode allows remote connection to the air conditioning unit utilizing SNMP, Modbus TCP, EtherNet/IP, and Profinet protocol. Customers that use their own software can download an MIB file for SNMP, EDS or EtherNet/IP Object file for EtherNet/IP, Coil Register file for Modbus TCP, and Data Point for Profinet.

Note: the Ethernet card (RAC module) has a default IP Address of 192.168.1.2

Both Ethernet and USB communication allow the ability to:

- Read ACU inlet and outlet air temperature
- Read and change cooling and cooling differential setpoints
- Read and change heating and heating differential setpoints
- Read and change the high and low temperature alarm settings
- Read and change the Gateway IP address, Device IP address, Subnet MASK, Trap IP address, and community string
- Read and change unit identification

© 2022 nVent

- Read and change the state of IP address from static to dynamic or vice versa
- Read and change the air temperature unit of measure (from F to C or vice versa)
- Read current alarm status
- Evaporator fan control setting
- Read and change the control of door open switch

SOFTWARE AND CONFIGURATION FILE DOWNLOADS

As stated above, the PC interface tool, MIB file, EDS and EtherNet_IP Object file, Coil Register file, and Data Point file can be downloaded from remote access control support center link, https://go.nvent.com/remote-access-control-support-center.

USING HOFFMAN PC INTERFACE TOOL

Hoffman PC Interface Tool gives the user the ability to communicate with Hoffman air conditioning unit as to read and write air temperature data, high and low temperature alarm setting, active alarms, and other information from the controller remotely using either Ethernet or USB connection. With Hoffman PC Interface Tool a user has the ability to remotely manage and monitor hundreds of Hoffman air conditioners both domestically and globally at one central location at user's own pace, so long as all air conditioners are configured in the same subnet in the network. Hoffman PC Interface Tool also supports text message and email alerting to a service technician when an alarm occurs. In addition, the tool also provides data logging capability for data analysis.

USB COMMUNICATION MODE

NOTE: before connecting the unit to the PC, make note of Comm Ports present. After the unit is connected to the PC, a new Comm Port will be added to the list. Recommend using the new Comm Port.

- In the Hoffman A.C. Monitor main screen, click on **Tools** and uncheck **Use Ethernet**
- Click on **Tools** menu again, the **Comm Port** menu is now enabled
- Put the mouser icon to the **Comm Port** and to the right there is small box with dropdown arrow
- Click on the dropdown arrow next to the small box to view the list of the Comm Port
- Write down the list of the Comm Port
- Connect the Mini-b USB cable from the PC or laptop to the A/C unit
- Click on **Tools** menu and point the mouser icon to the **Comm Port**, the small box with dropdown arrow presents to the right
- Click on the dropdown arrow and select the newest or higher number of the Comm Port

TO VIEW THE CONTROLLER DATA INFORMATION FROM THE A/C UNIT

- In the Hoffman A.C. Monitor main screen, select **Single ACU Monitor** tab.
- Click on **Enable Comm** button, then the screen will be displayed the enclosure air temperature and other temperature settings information include the unit of measure.
- The **Enable Comm** text on the button now changes to **Disable Comm**.
- To stop the communication, click on the **Disable Comm** button and it will change to Enable Comm.

TO CHANGE THE TEMPERATURE SETTINGS TO THE CONTROLLER

- In the Hoffman A.C. Monitor main screen, select **Single ACU Settings** tab.
- Note: the **Change Settings** button is disable and all settings are grayed out. Click on **Read Settings** button, all settings are now displayed on screen and the **Change Settings** button is now enable.
- To change any of the temperature setting, Unit ID, or Station Name, simply click up/down arrow on right of the box or highlight the current value and type the new value in the box.
- Check the box on the left, then click on **Change Setting** buttons to save the new setpoint.
- Click on **Read Settings** again to verify the new setpoint.
- Select **Single ACU Monitor** tab and click on **Enable Comm** to read the new temperature settings from the controller.
- Each of the setpoint should match the new variables that just entered from the **Single ACU Settings** tab.

TO VIEW AND CHANGE THE ETHERNET CARD (RAC) INFORMATION

- In the Hoffman A.C. Monitor main screen, select **Single ACU Ethernet Info** tab and notice that the **Reprogram ACU** button is disabled.
- Click on **Read Ethernet Info** button, the Ethernet information will be displayed and the **Reprogram ACU** button is enable.
- To change the Ethernet configuration such as Device IP Address, Gateway IP, and Trap IP, make sure to change the **Community** string to **private** from **public**. Note that case is very sensitive. The wording must be lower case only.
- Enter the new network configuration to Device IP address, Gateway IP, and Trap IP, then click on **Reprogram ACU** button to write to the network card.
- In order to be recognized the new networking configurations in local network, cycle power to the A/C unit is required.

© 2022 nVent

TO CHANGE THE STATIC NETWORK TO DYNAMIC NETWORK MODE

- In the **Single ACU Ethernet** Info tab screen, click on **Read Ethernet Info** button to read the network card information.

  Note: the **Reprogram ACU** button is now enable.

- Check the box next to the **Use DHCP Server** on the upper left corner of the screen.
- Click on **Reprogram ACU** button. Now the network is switched to dynamic from static mode.
- To change the dynamic mode to static mode, in the **Single ACU Ethernet Info** tab window click on **Read Ethernet Info** button.
- Uncheck the box next to the **Use DHCP Server** on the upper left corner of the screen.
- Click on **Reprogram ACU** button to switch to static mode.

USB COMMUNICATION MODE

NOTE: before connecting the unit to the PC, make note of Comm Ports present. After the unit is connected to the PC, a new Comm Port will be added to the list. Recommend using the new Comm Port.

- In the Hoffman A.C. Monitor main screen, click on **Tools** and uncheck **Use Ethernet**.
- Click on **Tools** menu again, the **Comm Port** menu is now enabled.
- Put the mouser icon to the **Comm Port** and to the right there is small box with dropdown arrow.
- Click on the dropdown arrow next to the small box to view the list of the Comm Port.
- Write down the list of the Comm Port.
- Connect the Mini-b USB cable from the PC or laptop to the A/C unit.
- Click on **Tools** menu and point the mouser icon to the **Comm Port**, the small box with dropdown arrow presents to the right.
- Click on the dropdown arrow and select the newest or higher number of the Comm Port.

TO VIEW THE CONTROLLER DATA INFORMATION FROM THE A/C UNIT

- In the Hoffman A.C. Monitor main screen, select **Single ACU Monitor** tab.
- Click on **Enable Comm** button, then the screen will be displayed the enclosure air temperature and other temperature settings information include the unit of measure.
- The **Enable Comm** text on the button now changes to Disable Comm.
- To stop the communication, click on the **Disable Comm** button and it will change to Enable Comm.

TO CHANGE THE TEMPERATURE SETTINGS TO THE CONTROLLER

- In the Hoffman A.C. Monitor main screen, select **Single ACU Settings** tab.
- Note that the **Change Settings** button is disable and all settings are grayed out. Click on **Read Settings** button, all settings are now displayed on screen and the **Change Settings** button is now enable.
- To change any of the temperature setting, Unit ID, or Station Name, simply click up/down arrow on right of the box or highlight the current value and type the new value in the box.
- Check the box on the left, then click on **Change Setting** buttons to save the new setpoint.
- Click on **Read Settings** again to verify the new setpoint.
- Select **Single ACU Monitor** tab and click on **Enable Comm** to read the new temperature settings from the controller.
- Each of the setpoint should match the new variables that just entered from the **Single ACU Settings** tab.

TO VIEW AND CHANGE THE ETHERNET CARD (RAC) INFORMATION

- In the Hoffman A.C. Monitor main screen, select **Single ACU Ethernet Info** tab and notice that the **Reprogram ACU** button is disabled.
- Click on **Read Ethernet Info** button, the Ethernet information will be displayed and the **Reprogram ACU** button is enable.
- To change the Ethernet configuration such as Device IP Address, Gateway IP, and Trap IP, make sure to change the **Community** string to **private** from **public**. Note that case is very sensitive. The wording must be lower case only.
- Enter the new network configuration to Device IP address, Gateway IP, and Trap IP, then click on **Reprogram ACU** button to write to the network card.
- In order to be recognized the new networking configurations in local network, cycle power to the A/C unit is required.

© 2022 nVent

TO CHANGE THE STATIC NETWORK TO DYNAMIC NETWORK MODE

- In the **Single ACU Ethernet Info** tab screen, click on **Read Ethernet Info** button to read the network card information.

  Note: the **Reprogram ACU** button is now enable.

- Check the box next to the **Use DHCP Server** on the upper left corner of the screen.
- Click on **Reprogram ACU** button. Now the network is switched to dynamic from static mode.
- To change the dynamic mode to static mode, in the **Single ACU Ethernet Info** tab window click on **Read Ethernet** Info button.
- Uncheck the box next to the **Use DHCP Server** on the upper left corner of the screen.
- Click on **Reprogram ACU** button to switch to static mode.

ETHERNET COMMUNICATION MODE

- In the Hoffman A.C. Monitor screen, click on **Tools** on the main menu.
- In the dropdown window, check the **Use Ethernet** and notice that **Comm Port** is now disabled.
- Select **Single ACU Monitor** tab, in the window click on the **Device IP** box and type the IP address that need to communicate to the network card.
- Click on the **Community** box and then type the word **private**.

  Note: there are two community strings where one is for read ONLY and one is for read/write. The word "public" allows to read ONLY and "private" allows to read and write.

- Click on **Enable Comm** button to communicate to the network card and read the temperature information from the controller.
- Now the temperature settings information in the controller present on the screen.
- To view and change the temperature setpoints, Ethernet card configurations, static and dynamic networking mode, simply follow the same procedures that define for the USB communication mode above.

TO MONITOR MULTIPLE A/C UNITS IN THE NETWORK

With the Ethernet networking mode, it provides user with the ability to manage and monitor hundreds of the A/C units from distance domestically and globally at one central location as long as all A/C units configure in the same subnet in the network. Refer to remote access control (RAC) Instruction Manual for configuring multiple units and with text message and email capability in Hoffman A.C. Monitor software. The remote access control Instruction Manual, P/N: 89091002 can be downloaded from nVent support center link, https://go.nvent.com/remote-access-control-support-center.

ALARM LOG ACCESSIBLE WITH SUPPORT PROTOCOL

- Using custom software with below supporting file gives the user the ability to view a log of the last 25 alarms
  - MIB file for SNMP protocol
  - Register and Coil file for Modbus TCP protocol
  - EDS and/or EtherNet_IP Objects file for EtherNet/IP protocol
  - Profinet Data Point file for Profinet protocol

© 2022 nVent

REMOTE ACCESS CONTROL PIN-OUT

	FUNCTION	NAME	PIN#	WIRE#
J6	RETURN	C	1	BLK75
	ENCL MI	NO1	2	BLK77
	COOL	NO2	3	ORG78
	NA	N03	4	-
	HEAT	NO4	5	BRN76
J7	RETURN	C	2	YEL39
	ALAR RELAY OUTPUT	NO5	3	YEL38
J1	GROUND	G0	1	BLK40
	POWER (24VAC)	G	2	WHT41
J2	NA	5V	1	-
	NA	S3	2	-
	INLET TEMP PROBE	S1	3	RED
	NA	Y1	4	-
	DOOR OPEN SWITCH	ID1	5	WHT63
	GROUND	O	6	WHT
	RESERVED	S5	7	-
	OUTLET TEMP PROBE	S2	8	RED45
	NA	Y2	9	-
	MAL-FUNCTION ALARM	ID2	10	BLU88
J3	RESERVED	ID3	1	-
	UNIT REMOTE ON/OFF	ID5	2	-
	NA	+V	3	-
	RESERVED	S6	4	-
	NA	VL	5	-
	RESERVED	ID4	6	-
	GROUND	O	7	-
	RESERVED	S4	8	-
J4	DATA (-)	-	1	BLK
	DATA (+)	+	2	RED
	GROUND	O	3	WHT
J5	DATA (-)	-	1	-
	DATA (+)	-	2	-
	GROUND	O	3	-

© 2022 nVent

GENERAL SAFETY INFORMATION

Please observe the following general safety instructions when assembling and operating the unit:

- Assembling, installing and servicing must only be performed by properly trained specialists.
- When transporting the enclosure with the cooling unit externally mounted, always use an additional shipping brace to support the cooling unit.
- Do not attempt to operate the air conditioner while it is horizontal or on its side, back or front.
- Factory-supplied replacement parts must be used.
- Repaired/replaced components must be located and wired in the identical location as the original components.
- Hazardous Location rating may be compromised if the above are not followed.
- Operation of air conditioner in areas containing airborne caustics or chemicals can rapidly degrade sealing properties of materials, deteriorate filters, refrigeration coils, blowers and motors. Contact nVent Equipment Protection for special recommendations.

DANGER

Danger: explosion hazard - do not energize, disconnect, or troubleshoot equipment unless power has been switched off or the area is known to be non-hazardous.

Unit to be installed and maintained by properly trained personnel only.

Danger: Risque d'explosion – Ne pas alimenter, déconnecter ni dépanner l'équipement si l'alimentation n'a pas été coupée ou si la zone n'est pas reconnue comme non dangereuse.

© 2022 nVent

MAINTENANCE

COMPRESSOR

The compressor requires no maintenance. It is hermetically sealed, properly lubricated at the factory and should provide years of satisfactory operating service.

Under no circumstances should the access fitting covers be loosened, removed or tampered with.

Breaking of seals on compressor access fittings during warranty period will void warranty on hermetic system.

Recharging ports are provided for the ease and convenience of reputable refrigeration repair service personnel for recharging the air conditioner.

INLET AIR FILTER

This air conditioner was designed with a dust resistant condenser coil. This allows it to be run filterless in most applications. The air conditioner is shipped with a filter in place for your convenience. For filterless operation, simply remove the filter. Should you decide the filter is necessary in your application, regular maintenance to clean this filter will assure normal operation of the air conditioner. The easily removable inlet air filter is located behind the inlet of the front cover. If necessary filter maintenance is delayed or ignored, the maximum ambient temperatures under which the unit is designed to operate will be decreased.

If the compressor's operating temperature increases above designed conditions due to a dirty or clogged filter (or plugged condenser coil), the air conditioner's compressor will stop operating due to actuation of the thermal overload cut-out switch located on the compressor housing. As soon as the compressor temperature has dropped to within the switch's cut-in setting, the compressor will restart automatically. However the above condition will continue to take place until the filter or coil has been cleaned. It is recommended that power to the air conditioner be interrupted intentionally when abnormally high compressor operating temperature causes automatic shut-down of the unit. The above described shut-down is symptomatic of a clogged or dirty filter, thus causing a reduction in cooling air flow across the surface of the compressor and condenser coil.

HOW TO REMOVE, CLEAN OR INSTALL A NEW INLET AIR FILTER

RP aluminum washable air filters are designed to provide excellent filtering efficiency with a high dust holding capacity and a minimum amount of resistance to air flow. Because they are constructed entirely of aluminum they are lightweight and easy to service. To achieve maximum performance from your air handling equipment, air filters should be cleaned on a regular basis.

The inlet air filter is located behind the condenser air inlet grille. To access the filter, simply slide it out. The filter may now be cleaned or a new filter installed.

Cleaning Instructions:

1. Flush the filter with warm water from the exhaust side to the intake side. DO NOT USE CAUSTICS.
2. After flushing, allow filter to drain. Placing it with a corner down will assure complete drainage.

CONDENSATE MANAGEMENT AND DRAIN TRAP MAINTENANCE

The drain trap can be cleaned by pouring soapy water into the face of the evaporator coil. An alternate method is to remove the panel underneath the condenser coil, locate the drain trap above the condensate evaporator pan, and blow compressed air through the tube.

© 2022 nVent

CONDENSER AND EVAPORATOR AIR MOVERS

Impeller motors require no maintenance. All bearings, shafts, etc. are lubricated during manufacturing for the life of the motor.

If the condenser impeller motors (ambient impellers) should fail, it is not necessary to remove the air conditioner from the cabinet or enclosure to replace the blower. The condenser impeller is mounted on its own bracket and is easily accessible by removing the front cover.

If the evaporator impeller motor should fail, it may require dismounting the unit from the enclosure because access to the evaporator is through the enclosure side. After it is repaired, refer to Installation Instructions on page 12 for mounting the unit back onto the enclosure. Replace the mounting gasket if damaged.

⚠ CAUTION MISE EN GARDE

Operation of air conditioner in areas containing airborne caustics or chemicals can rapidly degrade sealing properties of materials, deteriorate filters, refrigeration coils, blowers and motors.

Contact nVent Equipment Protection for special recommendations.

Le fonctionnement du climatiseur dans des espaces contenant des produits caustiques ou chimiques en suspension dans l'air peut rapidement dégrader les propriétés d'étanchéité des matériaux, détériorer les filtres, les serpentins du condenseur, les ventilateurs et les moteurs.

Communiquer avec nVent Equipment Protection pour connaître les recommandations spéciales.

REFRIGERANT LOSS

Each air conditioner is thoroughly tested prior to leaving the factory to insure against refrigeration leaks. Shipping damage or microscopic leaks not found with sensitive electronic refrigerant leak detection equipment during manufacture may require repair or recharging of the system. This work should only be performed by qualified professionals, generally available through a local, reputable air conditioning repair or service company.

Should the refrigerant charge be lost, access ports on the suction and discharge sides of the compressor are provided for recharging and/or checking suction and discharge pressures.

Refer to the data on the nameplate which specifies the type of refrigerant and the charge size in ounces.

Before recharging, make sure there are no leaks and that the system has been properly evacuated into a deep vacuum.

REFRIGERANT PROPERTIES CHART (R134A)

°F	°C	Pressure		°F	°C	Pressure
-40	-40	-14.7		60	15.6	58
-35	-37.2	-12.3		65	18.3	64
-30	-34.4	-9.7		70	21.1	71.5
-25	-31.7	-6.8		75	23.9	78
-20	-28.9	-4		80	26.7	86.7
-15	-26.1	0		85	29.4	95
-10	-23.3	2		90	32.2	105
-5	-20.6	4		95	35	113.3
0	-17.8	7.5		100	37.8	125
5	-15	9		105	40.6	135
10	-12.2	12		110	43.3	146.7
15	-9.4	15		115	46.1	157.5
20	-6.7	18.5		120	48.9	170
25	-3.9	22		125	51.7	185
30	-1.1	26				
35	1.7	30				
40	4.4	35				
45	7.2	40				
50	10	45.5				
55	12.8	51.5				

© 2022 nVent

UNIT CHARACTERISTICS

	Model		
	NHZ280416GXXX	**NHZ280426GXXX**	**NHZ280446GXXX**
Dimensional Data			
Height	28” / 711.2 mm		
Width	11.5” / 292.1 mm		
Depth	14” / 355.6 mm		
Unit Weight	84 lbs / 38 kg	84 lbs / 38 kg	98 lbs / 44 kg
Unit Protection Rating	Type 12/4/4X/3R Class 1 Division 2 Groups A, B, C, D T4A		
Cooling Data			
Refrigerant	R134a		
Refrigerant Charge	10 oz.	11 oz.	11 oz.
Cooling Capacity at 95 F Enclosure 95 F Ambient (BTU/Hr.)	3300/3500	3690	3690
Cooling Capacity at Max Conditions (BTU/Hr.)	3487/3680	4279/4681	4279/4681
Maximum Ambient Temp	125 F / 52 C		
Minimum Ambient Temp	-40 F / -40 C		
Enclosure Airflow	143 CFM		
External Airflow	288 CFM		
Condensate Management	Hose discharge / Optional powered C/E		
Electrical Data			
Rated Voltage (50/60 Hz)	115 V	230 V	460 V
Rated Frequency	50 / 60 Hz	50 / 60 Hz	50 / 60 Hz
Voltage Range	+/- 10% of rated		
Cooling Amps at Max Conditions	10.2/9.4	4.9/5.0	2.4/2.5
Compressor RLA / LRA	8.1/40.0	24.5	24.5
Evaporator Fan RLA	.38/.36	.19	.19
Condenser Fan RLA	.78/.93	.53	.53

FUNCTIONAL DATA

Unit	Evaporator. Air In(°F)	Amps(A)	Condenser Delta(°F)	Evaporator Delta(°F)
NHZ280416GXXX	65-80	7.3-8.9	15-23	22-31
	80-100	7.9-9.9	17-26	25-31
NHZ280426GXXX	65-80	4.7-5.8	14-23	21-32
	80-100	4.8-6.3	17-28	26-38
NHZ280425GXXX	65-80	3.2/4.5	14-22	19-29
	80-100	3.5/5.2	16-26	23-35
NHZ280446GXXX	65-80	2.4-2.9	14-23	21-32
	80-100	2.4-3.2	17-28	26-38

© 2022 nVent

SERVICE DATA

COMPONENTS LIST

Part Description	Part Number		
	115 V	230 V	460 V
Capacitor, Compressor, Start	89074579SP	89074578SP	89074578SP
Capacitor, Condenser Impeller	52603213SP	52603214SP	52603214SP
Coil, Condenser	89068416SP	89068416SP	89068416SP
Coil, Evaporator	89068414SP	89068414SP	89068414SP
Coil, Evaporator E-coated	89106893SP	89106893SP	89106893SP
Compressor (see note below)	89111751SP	89111752SP	89111752SP
Filter, Air, Reusable	89068420SP	89068420SP	89068420SP
Filter/Dryer	52602800SP	52602800SP	52602800SP
Head Pressure Control Switch	89112571SP	89112571SP	89112571SP
Impeller, Condenser	89114225SP	89114226SP	89114226SP
Fan, Evaporator	12101201SP	12101202SP	12101202SP
Relay, Compressor Start	89115078SP	89114206SP	89114206SP
Capillary Tube	99054039SP	99064045SP	99064045SP
Transformer, Input Power	N/A	N/A	101006111SP
Controller, Basic	89202719SP	89202719SP	89202719SP
Thermistor	89075654SP	89075654SP	89075654SP
Bridge Rectifier	89087424SP	89087424SP	89087424SP
Communication Board	89145457SP	89145457SP	89145457SP
Fuse, Controller (315mA)	89085114SP	89085114SP	89085114SP
Encapsulated Compressor Overload	89114216SP	89114217SP	89114217SP
Solid State Relay	89114223SP	89114223SP	89114223SP
Overload Relay	89115269SP	89115544SP	89115544SP
Mounting Gasket	89114209SP	89114209SP	89114209SP
Mounting Kit	89068421SP	89068421SP	89068421SP
Stainless Steel Mounting Kit	89116252SP	89116252SP	89116252SP

DANGER

Danger: explosion hazard - Substition or incorrect installation of components may void the suitability for hazardous location use.

Danger: Risque d'explosion – Le remplacement ou une mauvaise installation des composants peuvent rendre l'équipement inadapté à une utilisation en zone dangereuse.

Note: This design utilizes an encapsulated compressor overload, which is mounted on the side of the compressor body. If the compressor is replaced, the standard overload (included with the compressor) must be discarded and not used. An encapsulated overload must be mounted and wired identical to the original.

© 2022 nVent

NHZ280416GXXX PRESSURE TABLES

NHZ280416GXXX 50hz																	L = Suction (±5PSIG); H=Head (-10/+20PSIG)
	Enclosure Temperature (°F)																
	°F	70		80		90		95		100		113		120		125	
		L	H	L	H	L	H	L	H	L	H	L	H	L	H	L	H
Ambient Temperature (°F)	70	23	118	25	121	27	124	28	125	28	127	31	131	32	133	33	134
	80	25	145	27	149	29	153	30	154	31	156	34	161	35	163	36	165
	90	28	173	30	177	32	181	33	183	34	185	37	190	39	193	40	195
	95	29	186	31	191	34	195	35	197	36	199	39	205	41	208	42	210
	100	30	200	32	205	35	209	36	212	37	214	40	220	42	223	43	226
	113	33	235	36	241	39	246	40	249	41	252	45	259	47	263	48	265
	120	35	254	38	260	40	266	42	269	43	272	47	280	48	284	50	287
	125	36	268	39	274	41	280	43	283	44	287	48	295	50	299	51	302

NHZ280416GXXX 60hz																	L = Suction (±5PSIG); H=Head (-10/+20PSIG)
	Enclosure Temperature (°F)																
	°F	70		80		90		95		100		113		120		125	
		L	H	L	H	L	H	L	H	L	H	L	H	L	H	L	H
Ambient Temperature (°F)	70	22	122	23	124	24	127	24	128	25	129	26	132	27	134	27	135
	80	24	149	25	153	26	156	27	157	27	159	29	163	29	165	30	166
	90	26	177	27	181	29	184	30	186	30	188	32	193	33	195	34	197
	95	27	191	29	194	30	198	31	200	32	202	34	207	35	210	36	212
	100	28	204	30	209	31	213	32	215	33	217	35	223	36	226	37	228
	113	31	240	33	245	35	250	36	253	37	255	39	262	41	266	42	268
	120	32	259	34	265	36	271	37	273	39	276	41	284	43	287	44	290
	125	33	273	35	279	38	285	39	288	40	290	43	298	45	302	46	305

© 2022 nVent

NHZ280426GXXX PRESSURE TABLES

NHZ280426GXXX 50hz	L = Suction (±5PSIG); H=Head (-10/+20PSIG)															
Ambient Temperature (°F)	Enclosure Temperature (°F)															
°F	70		80		90		95		100		113		120		125	
	L	H	L	H	L	H	L	H	L	H	L	H	L	H	L	H
70	25	119	29	125	32	131	34	134	36	136	41	144	43	148	45	151
80	28	145	32	152	35	158	37	162	39	165	44	173	47	178	48	181
90	31	171	35	179	38	186	40	190	42	193	47	203	50	208	52	211
95	32	184	36	192	40	200	42	204	44	207	49	217	52	223	54	226
100	34	198	38	205	42	213	44	217	46	221	51	231	54	237	55	241
113	37	232	41	240	46	249	48	253	50	258	55	269	58	275	60	280
120	39	250	43	259	47	268	50	273	52	278	57	290	60	296	62	301
125	41	263	45	273	50	282	52	287	54	292	59	304	62	311	64	316

NHZ280426GXXX 60hz	L = Suction (±5PSIG); H=Head (-10/+20PSIG)															
Ambient Temperature (°F)	Enclosure Temperature (°F)															
°F	70		80		90		95		100		113		120		125	
	L	H	L	H	L	H	L	H	L	H	L	H	L	H	L	H
70	23	124	26	130	29	135	31	138	32	141	36	148	38	152	40	155
80	26	151	29	157	32	163	34	167	36	170	40	178	42	183	44	186
90	28	177	32	185	35	192	37	196	39	199	43	209	46	214	47	217
95	30	191	33	198	37	206	38	210	40	214	45	224	47	229	49	233
100	31	204	35	212	38	220	40	224	42	228	47	239	49	244	51	248
113	35	239	39	248	42	257	44	262	46	266	51	278	54	284	56	289
120	37	258	40	267	44	277	46	281	48	286	53	298	56	305	58	310
125	38	271	42	281	46	291	48	296	50	301	55	314	58	321	60	326

F-GAS INFORMATION

	NHZ280416GXXX	NHZ280426GXXX NHZ280446GXXX
Refrigerant Kühlmittel Chłodziwo	R134a	R134a
GWP	1430	1430
Factory Charge Füllmenge durch Hersteller Opłata Fabryczna	283 Grams 283 Gramm 283 Gramów	312 Grams 312 Gramm 312 Gramów
CO_2 Equivalent CO_2 Equivalent CO_2 Ekwilalent	0.40 Tons 0,40 Tonnen 0,40 Tony	0.45 Tons 0,45 Tonnen 0,45 Tony

© 2022 nVent

TROUBLE SHOOTING

BASIC AIR CONDITIONING TROUBLE SHOOTING CHECK LIST - SMART CONTROLLER

1. Check manufacturer's nameplate located on the unit for correct power supply.
2. Turn on power to the unit. The controller will display a start up sequence then revert to the normal temperature display mode. Is the correct enclosure temperature displayed?

   Note: The temperature may be alternating with an alarm code.

YES, proceed to step 3.	
NO, possible problem: » Open controller fuse » Controller in alarm condition. See Alarm Condition Display on page 34. » Defective controller » Defective thermistor - check by blowing warm air across the thermistor. If display temperature rises, thermistor is operable.	**Replace part**

3. The cooling status indication (symbol G) should be on. Is the symbol on? If not, press and hold the lower right "snowflake" button for greater than five seconds. Is the cooling mode symbol now on?

YES, proceed to step 4.	
NO, possible problem: » Defective controller	**Replace part**

4. The evaporator (Enclosure or "COLD" air) fan/impeller should turn on. Is there airflow?

YES, proceed to step 5.	
NO, possible problem: » Controller in alarm condition. See Alarm Condition Display on page 34. » Open motor winding » Stuck fan/impeller » Obstructed blades/wheel » Defective motor capacitor	**Repair or Replace defective part**

5. Start the cooling cycle by changing the cooling setpoint parameter (r01) to the low limit of 72 F (22 C). Symbol 1 should be displayed indicating a call for cooling. If symbol 1 is flashing, the unit is in Restart Time Delay mode. Within 6 minutes, symbol 1 should display without flashing. Is symbol 1 displayed without flashing?

YES, proceed to step 8.	
NO, possible problem: » Unit still in Recycle Time Delay mode » Enclosure temperature below cooling setpoint temperature	**Wait and/or heat enclosure thermistor T1**

6. The compressor and the condenser (Ambient or "HOT" air) impeller(s) should turn on. Is there adequate airflow?

© 2022 nVent

YES, proceed to step 7.
NO, possible problem: » Open motor winding(s) » Stuck impeller(s) » Obstructed wheel(s) » Defective motor capacitor(s) → **Repair or Replace defective part**

7. Carefully check the compressor for proper operation - motor should cause slight vibration and the outer case of the compressor should be warm. Is the compressor showing signs of this?

YES, wait 5 minutes, proceed to step 8.
NO, possible problem: » Defective start or run capacitor » Defective overload » Defective start relay » Defective contactor » Defective compressor » Tripped overload relay → **Reset, Repair or Replace defective part**

8. Make sure the coils are clean then check the evaporator “air in” and “air out” temperatures. If the temperatures are the same:

» Possible loss of refrigerant » Possible bad valves in compressor → **Repair or Replace defective part**

SYMPTOMS AND POSSIBLE CAUSES - REMOTE ACCESS CONTROL VERSION

SYMPTOM	POSSIBLE CAUSE
Unit won’t cool	Clogged fins on coil(s)
	Dirty filter
	Impellers not running
	Compressor not running
	Compressor runs, but has bad valves
	Loss of refrigerant
Compressor tries to start but won’t run	Low line voltage at start. Should be +/-10% rated voltage.
	Compressor motor stuck
	Bad contactor
	Bad overload switch
	Bad run/start capacitor
Unit blows breakers	Undersized breaker/fuse or not time delayed
	Short in system
Getting water in enclosure	Drain plugged
	Drain tube kinked
	Enclosure not sealed (allowing humidity in)
	Mounting gasket damaged

For additional technical support, contact nVent Equipment Protection at 800-896-2665.

© 2022 nVent

nVent
2100 Hoffman Way
Anoka, MN 55303 USA
☎ +1.763.422.2211
+1.763.576.3200

nVent.com

© 2022 nVent
P/N 89215757