PROLINE®

170˚ Hinge Kit

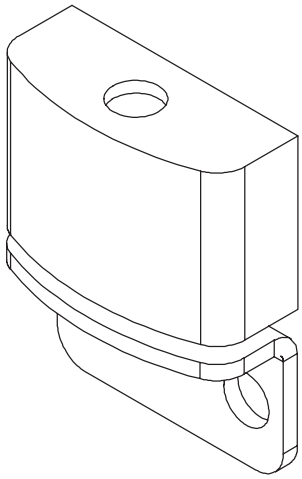

© 2018 Hoffman Enclosures Inc.
PH 763 422 2211 • nVent.com/HOFFMAN
P/N 60127324 87568725

1 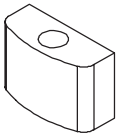 (2x)	5 M10 (4x)	9 With Swing Frame
2 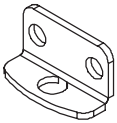 (2x)	6 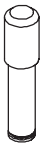 With Swing Frame	10 With Swing Frame
3 (8x)	7 With Swing Frame	11 With Swing Frame
4 (8x)	8 With Swing Frame	12 M10 With Swing Frame

© 2018 Hoffman Enclosures Inc.

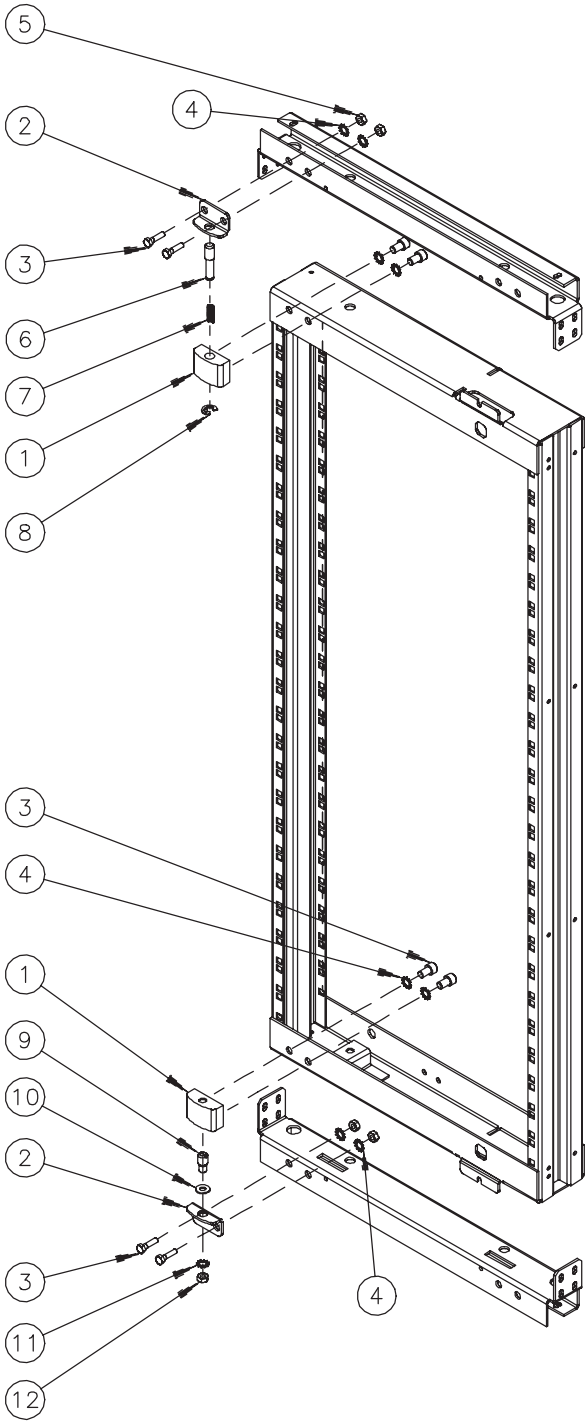

© 2018 Hoffman Enclosures Inc.

© 2018 Hoffman Enclosures Inc.
PH 763 422 2211 • nVent.com/HOFFMAN
P/N 60127324 87568725