We connect and protect

PROAIR
Air Conditioner

CR29 Model

TABLE OF CONTENTS

Warranty and Return Policy **2**
General Safety Instructions **3**
Receiving The Air Conditioner **3**
Handling And Testing The Air Conditioner **3**
Installation Instructions **4**
Dimension Drawings **4**
Mounting Cutout Dimension **5**
Wire Diagrams And Schematics **6**
Wire Diagram, Level 1, 2000 BTU 6
Schematic, Level 1, 2000 BTU 6
Wire Diagram, 115 V, Level 1, 4000 BTU 7
Schematic, 115 V, Level 1, 4000 BTU 7
Wire Diagram, 230 V, Level 1, 4000 BTU 8
Schematic, 230 V, Level 1, 4000 BTU 8
Wire Diagram, Level II and III, 2000 BTU 9
Schematic, Level II and III, 2000 BTU 10
Wire Diagram, 115 V, Level II and III, 4000 BTU 10
Schematic, 115 V, Level II and III, 4000 BTU 11
Wire Diagram, 230 V, Level II and III, 4000 BTU 11
Schematic, 460 V Level I, 4000 BTU 12
Schematic, 460 V Level II and III, 4000 BTU 12
Components List **13**
Parts List **14**
Technical Information **15**
Design Data 15
System Controls **15**
Level I Temperature Controller 15
Level II and III Temperature Controller 15
Temperature Control **16**
Principles of Operation **16**
Compressor 16
Inlet Air Filter 16
How to Remove, Clean or Install A New Inlet Air Filter 16
Condenser and Evaporator Air Movers 17
Refrigerant Loss **17**
Preventative Maintenance/Inspection **18**
Trouble Shooting **19**
F-GAS Information **23**

NOTE: Some of the information in this manual may not apply if a special unit was ordered. If additional drawings for a special unit are necessary, they have been inserted. Contact Pentair Equipment Protection if further information is required.

WARRANTY AND RETURN POLICY

https://hoffman.nVent.com/en-us/cooling-warranty-registration

https://nVent.widen.net/s/s8xgmxhvk2/89153291

GENERAL SAFETY INSTRUCTIONS

Observe the following general safety instructions for installation and operation of this product:

- This appliance is for installation only in locations not accessible to the general public.
- This appliance is not intended for use by persons, including children, with reduced physical, sensory, or mental capabilities, or lack of experience and knowledge, unless they have been given supervision or instruction concerning the use of the appliance by a person responsible for their safety.
- Children should be supervised to ensure that they do not play with the appliance.
- This appliance should be installed in accordance with national wiring regulations.
- Follow all precautions detailed in the following sections during transportation, receiving, testing, operation and maintenance.
- This appliance is intended for altitudes up to 10,000 ft (3,048 m) from sea level. For every additional 1000 ft of elevation, the capacity of this unit is derated by 1%.

RECEIVING THE AIR CONDITIONER

Inspect the air conditioner. Check for concealed damage that may have occurred during shipment. Look for dents, scratches, loose assemblies, evidence of oil, etc. Damage evident upon receipt should be noted on the freight bill. Damage should be brought to the attention of the delivering carrier – NOT to nVent Equipment Protection – within 15 days of delivery. Save the carton and packing material and request an inspection. Then file a claim with the delivering carrier.

nVent Equipment Protection cannot accept responsibility for freight damages; however, we will assist you in any way possible.

HANDLING AND TESTING THE AIR CONDITIONER

If the air conditioner has been in a horizontal position, be certain it is placed in an upright, vertical or mounting position for a minimum of five (5) minutes before operating.

⚠ CAUTION:

Do not attempt to operate the air conditioner while it is horizontal or on its side, back or front. The refrigeration compressor is filled with lubricating oil. This will cause permanent damage to the air conditioner and also voids the warranty.

TEST FOR FUNCTIONALITY **BEFORE** MOUNTING THE AIR CONDITIONER TO THE ENCLOSURE.

Refer to the nameplate for proper electrical current requirements. If cord-connected, connect the power cord to a properly grounded power supply. If permanently connected, wire the unit to a properly grounded power supply using copper conductors only. Power supply wiring should be restrained to ensure no contact with the internal fan. Minimum circuit ampacity should be at least 125% of the amperage shown in the design data section for the appropriate model. No other equipment should be connected to this circuit to prevent overloading. The air conditioner is rated for operation at 50 and 60 Hz. No action is necessary to adjust the appliance operation at the rated frequencies.

Immediately after applying power, the evaporator blower (enclosure air) should start running. Operate the air conditioner for five (5) to ten (10) minutes. No excessive noise or vibration should be evident during this run period. The condenser blower (ambient air), the evaporator blower (enclosure air), and the compressor should be running.

Condenser air temperatures should be warmer than normal room temperatures within a few minutes.

The compressor is provided with automatic reset thermal overload protection. This thermo-switch is located and mounted inside the plastic enclosure clipped to the compressor. The switch operates when the compressor overheats due to clogged or dirty inlet air filter or if ambient air temperatures exceed nameplate rating or if enclosure dissipated heat loads exceed the rated capacity of the air conditioner. The thermal overload switch will actuate and stop compressor operation. The blowers will continue to operate and the compressor will restart after it has cooled to within the thermal overload cut-in temperature setting.

INSTALLATION INSTRUCTIONS

1. Inspect air conditioner and verify functionality before mounting the air conditioner, see HANDLING AND TESTING THE AIR CONDITIONER on page 3.
2. Using the cutout dimensions shown in this manual, prepare the air “IN” and air “OUT” openings, and mounting bolt hole pattern for the enclosure. Select an installation location that will allow for adequate ventilation and clearance for service. Clearance between the air conditioner with or without a supplementary heater and adjacent structures (another enclosure, air conditioner, wall, or combustible surface) must be at least:
   - 24" from front
   - 6" from right side
   - 2" from left side
   - 6" from top; allow 20" above filter for filter removal
   - 14" from bottom

   Local fire codes may have different requirements; please observe applicable regulations for the location of the air conditioner.

   The distance between the air conditioner and the electronic components and other equipment installed inside the enclosure must be at least 3" to ensure adequate air circulation. At minimum clearance levels, an air baffle between the inlet and outlet may be necessary to prevent recirculation.
3. Using the mounting gasket kit provided with the unit, install gasket to air conditioner.
4. Mount air conditioner on enclosure using mounting bolts and washers provided to secure unit to enclosure. Allow unit to remain upright for a minimum of five (5) minutes before starting. Caution! Air conditioner must be in upright position during operation.
5. To avoid cross-threading mounting inserts, start bolts by hand before tightening with a wrench or ratchet driver.
6. Refer to the top of the nameplate for electrical requirements. Connect the power cord or wire the unit to a properly grounded power supply by following applicable national wiring regulations. Use of an extension cord is not recommended. If the air conditioner is wired to the power supply, the electrical circuit should be fused with a time delay fuse or HACR circuit breaker per the MOPD rating in the Design Data table – see page 15.
7. When the unit is equipped with an automatic temperature controller, the controller is preset at the factory for your convenience and should not require adjustment.

DIMENSION DRAWINGS

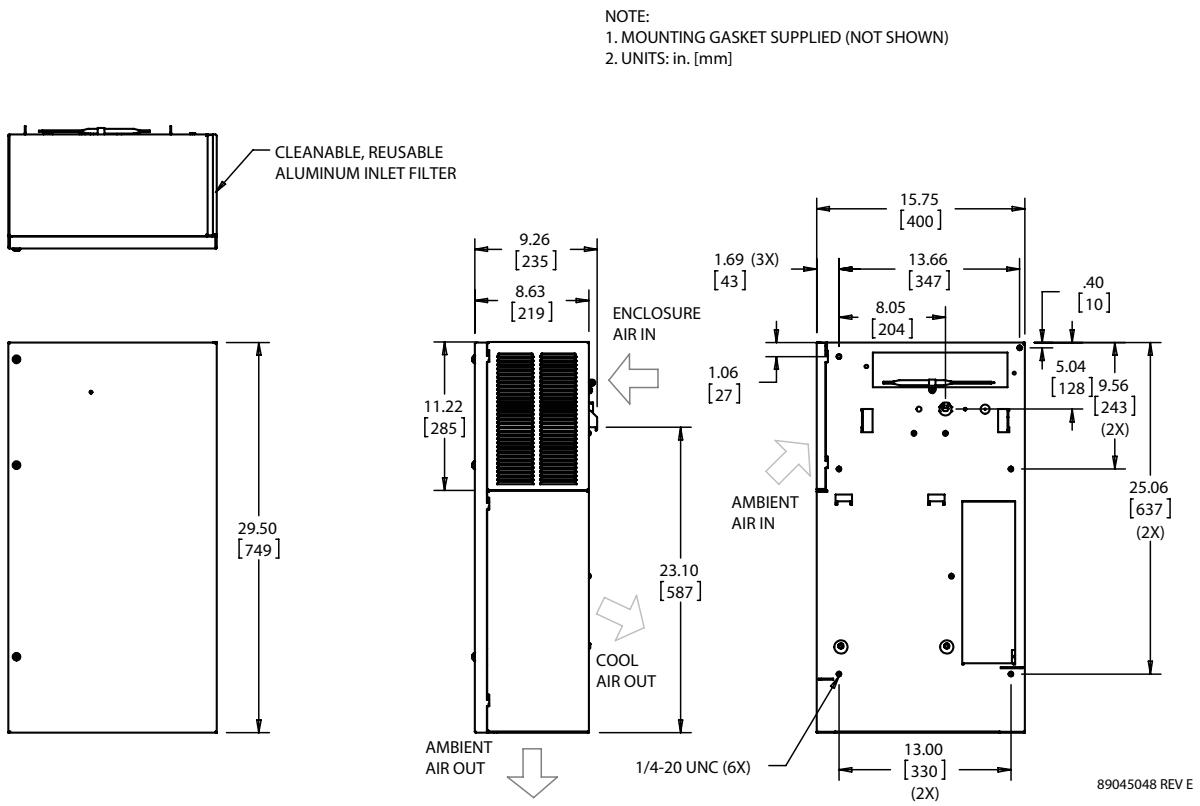

MOUNTING CUTOUT DIMENSION

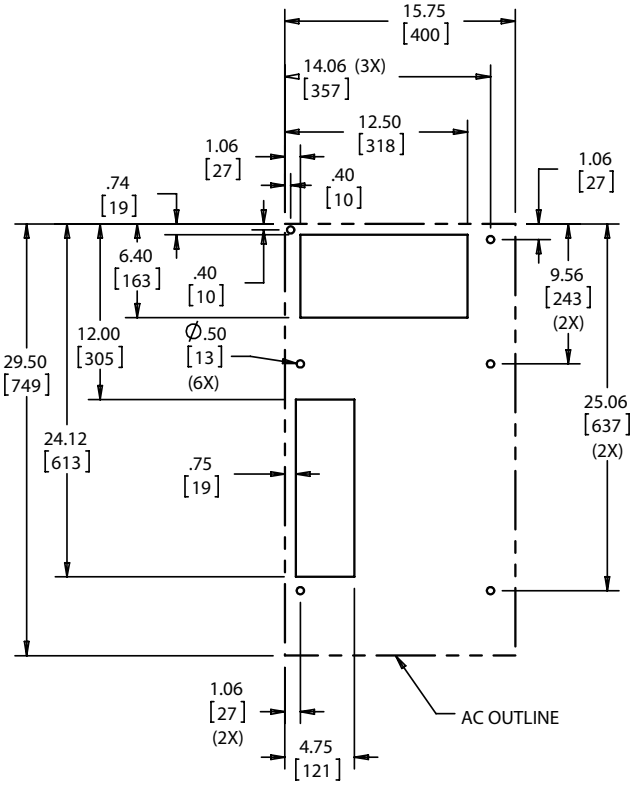

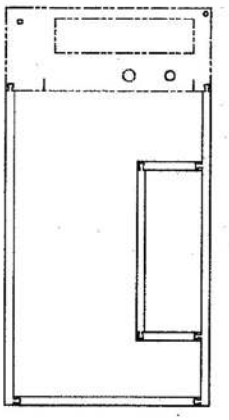

NOTE: Mounting Gasket Adheres to Air Conditioner

WIRE DIAGRAM, LEVEL 1, 2000 BTU

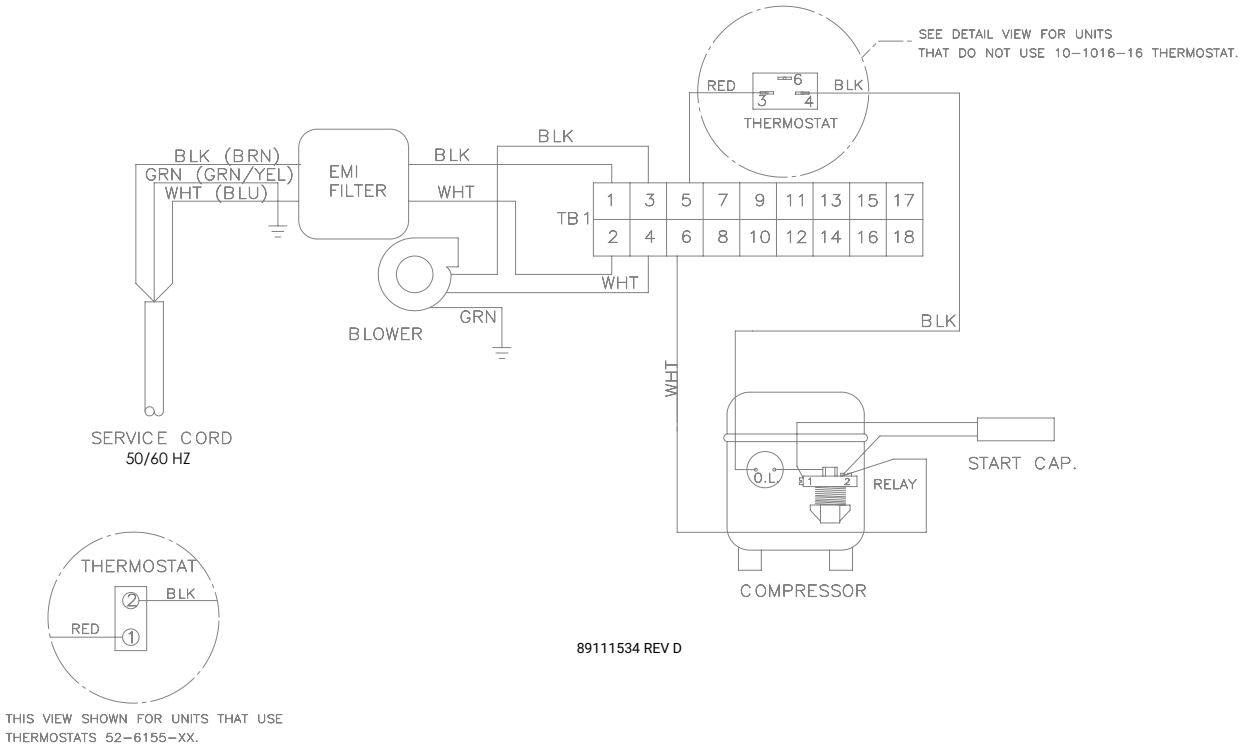

SCHEMATIC, LEVEL 1, 2000 BTU

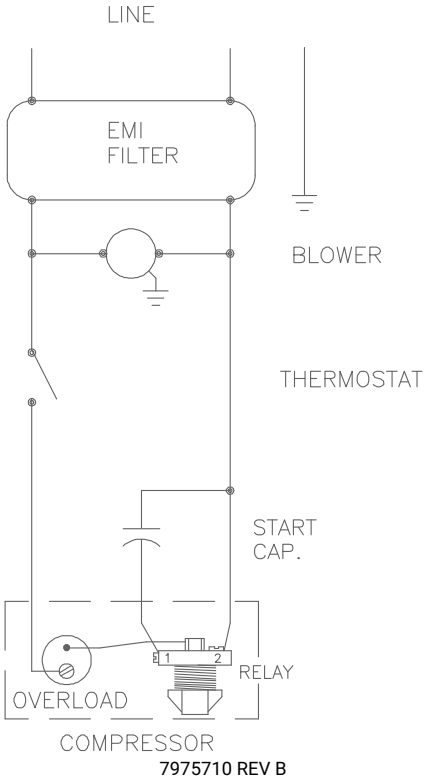

WIRE DIAGRAM, 115 V, LEVEL 1, 4000 BTU

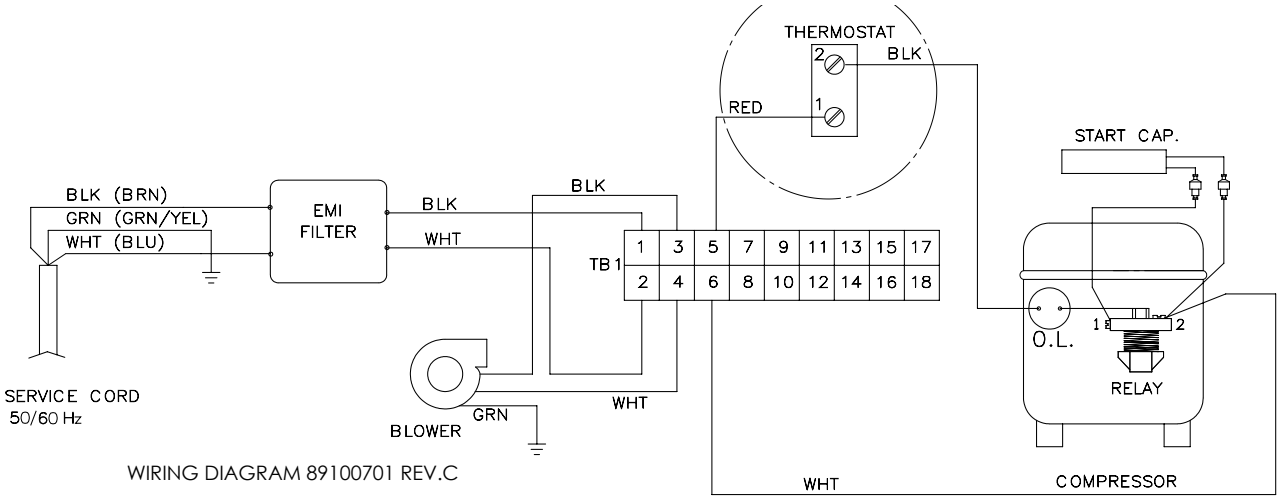

SCHEMATIC, 115 V, LEVEL 1, 4000 BTU

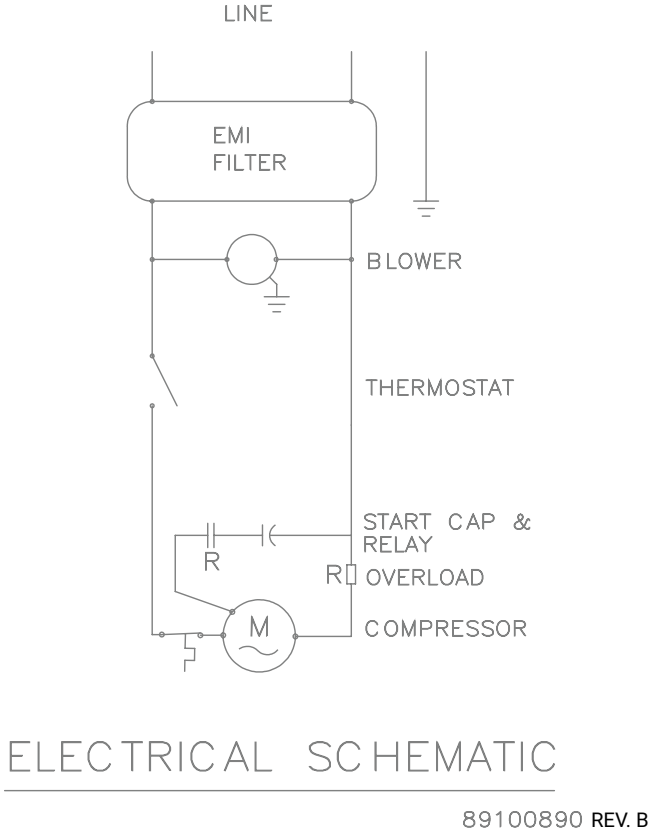

NOTE: For voltage, hertz, and options not shown in this manual, refer to the wiring diagram attached to the unit.

WIRE DIAGRAM, 230 V, LEVEL 1, 4000 BTU

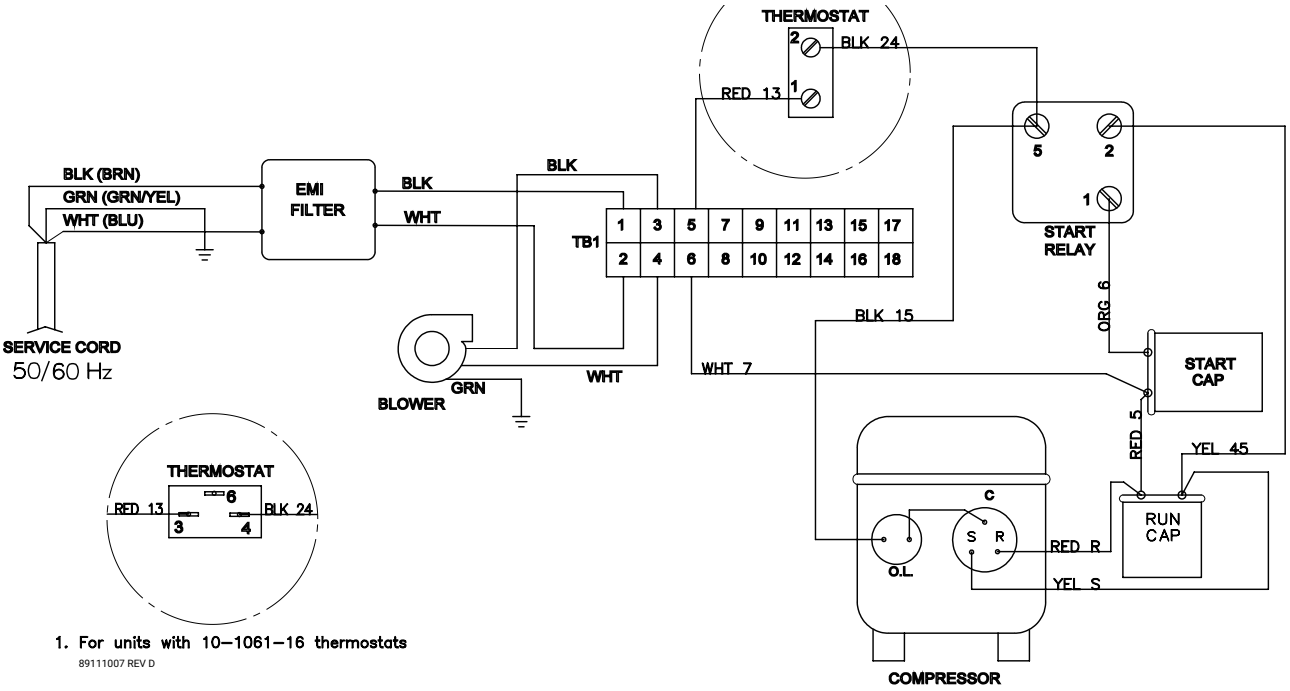

SCHEMATIC, 230 V, LEVEL 1, 4000 BTU

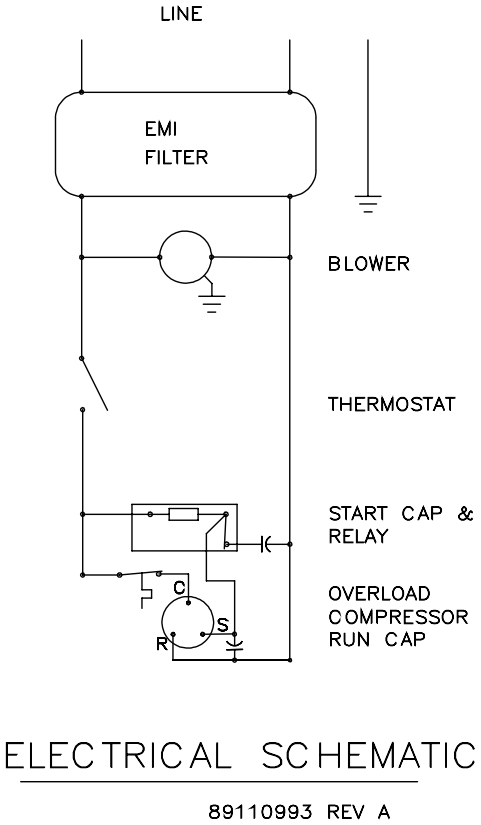

NOTE: For voltage, hertz, and options not shown in this manual, refer to the wiring diagram attached to the unit.

WIRE DIAGRAM, LEVEL II AND III, 2000 BTU

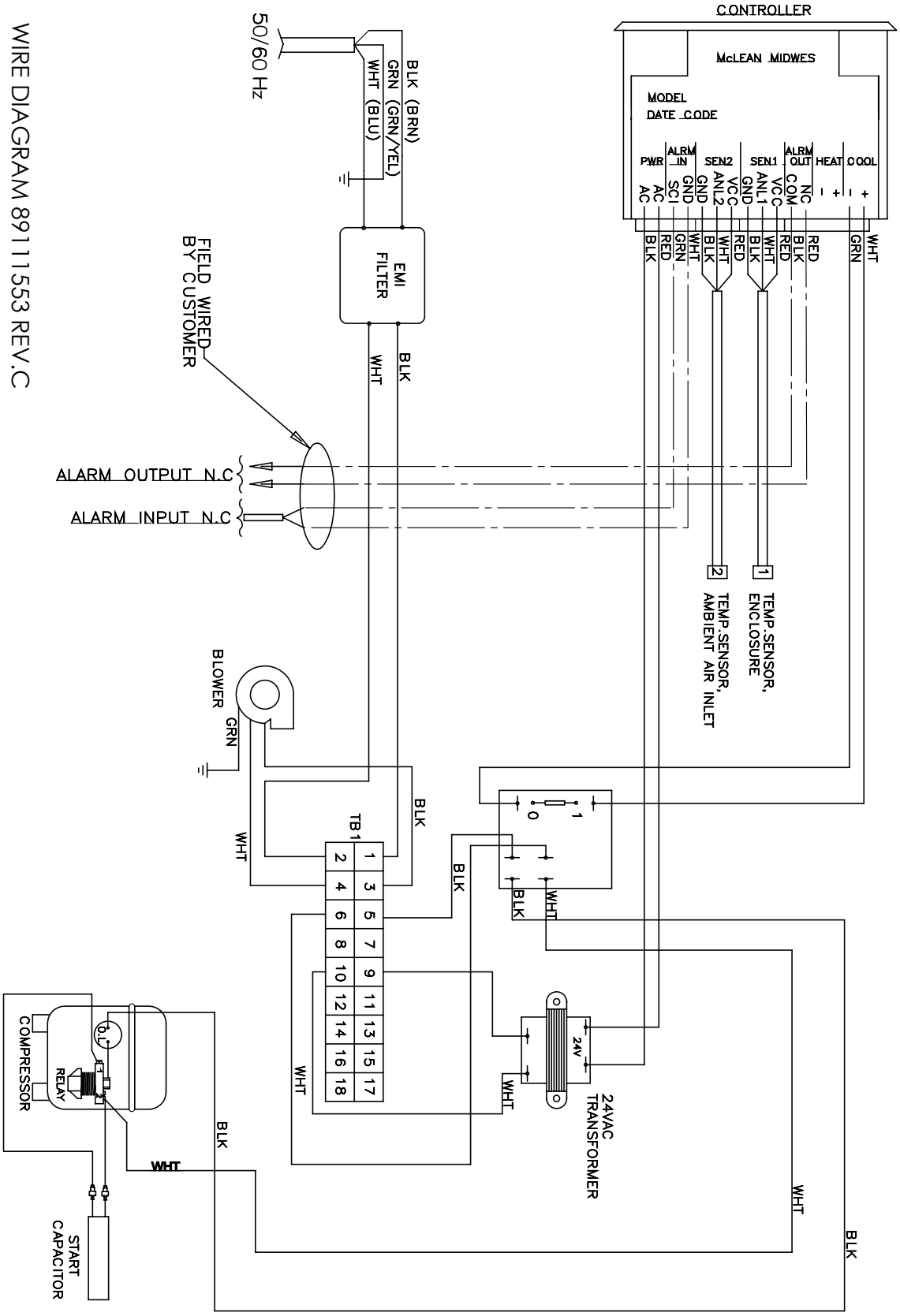

SCHEMATIC, LEVEL II AND III, 2000 BTU

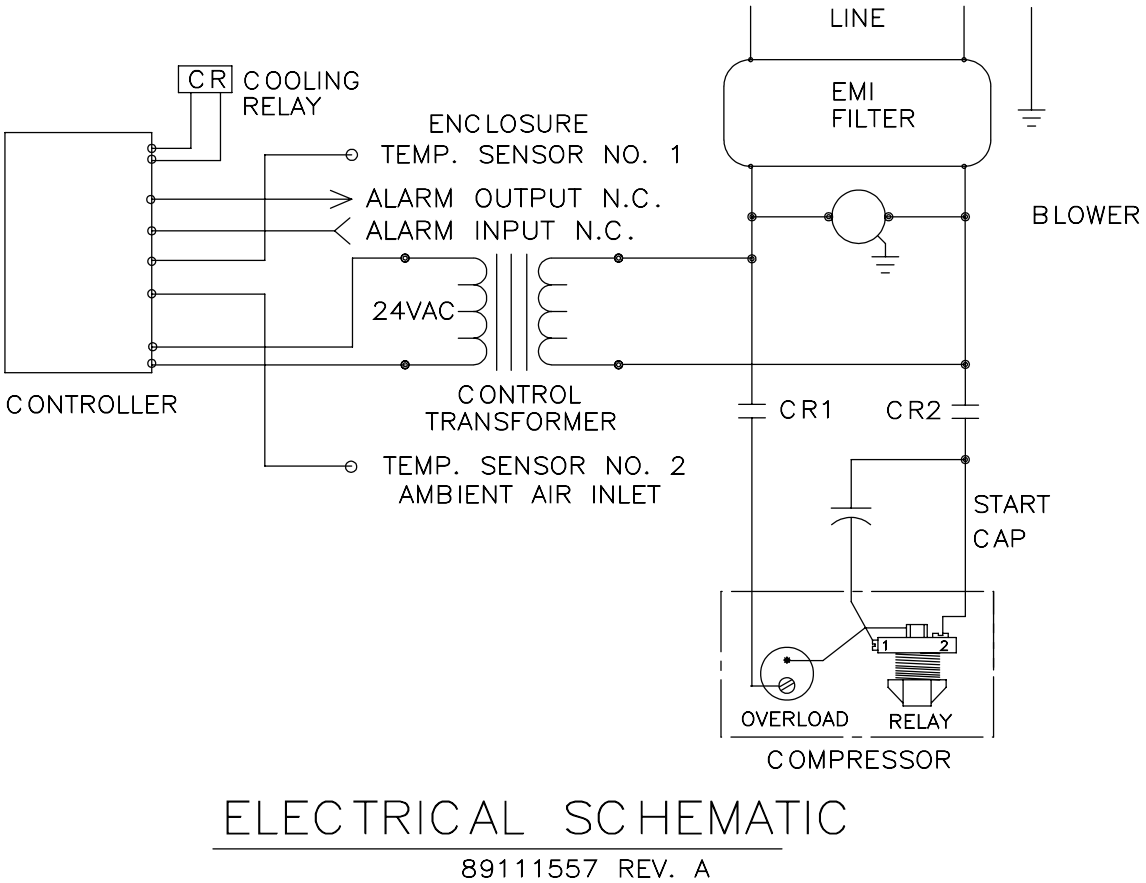

WIRE DIAGRAM, 115 V, LEVEL II AND III, 4000 BTU

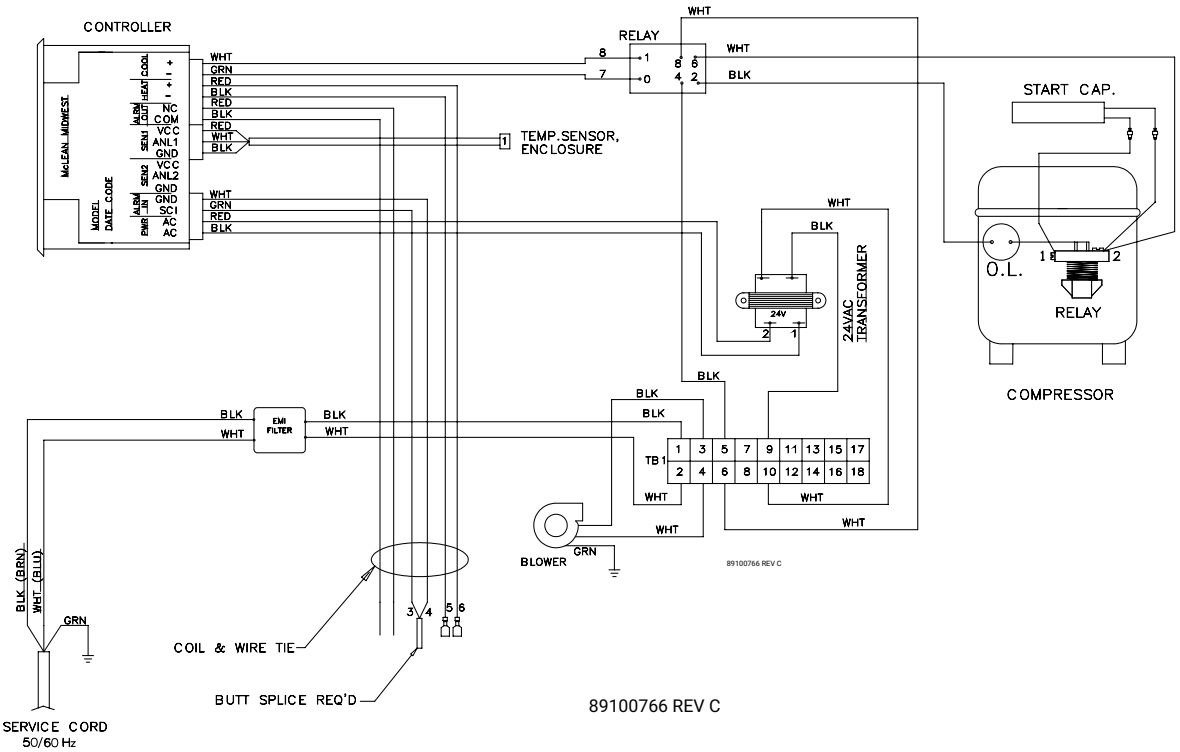

SCHEMATIC, 115 V, LEVEL II AND III, 4000 BTU

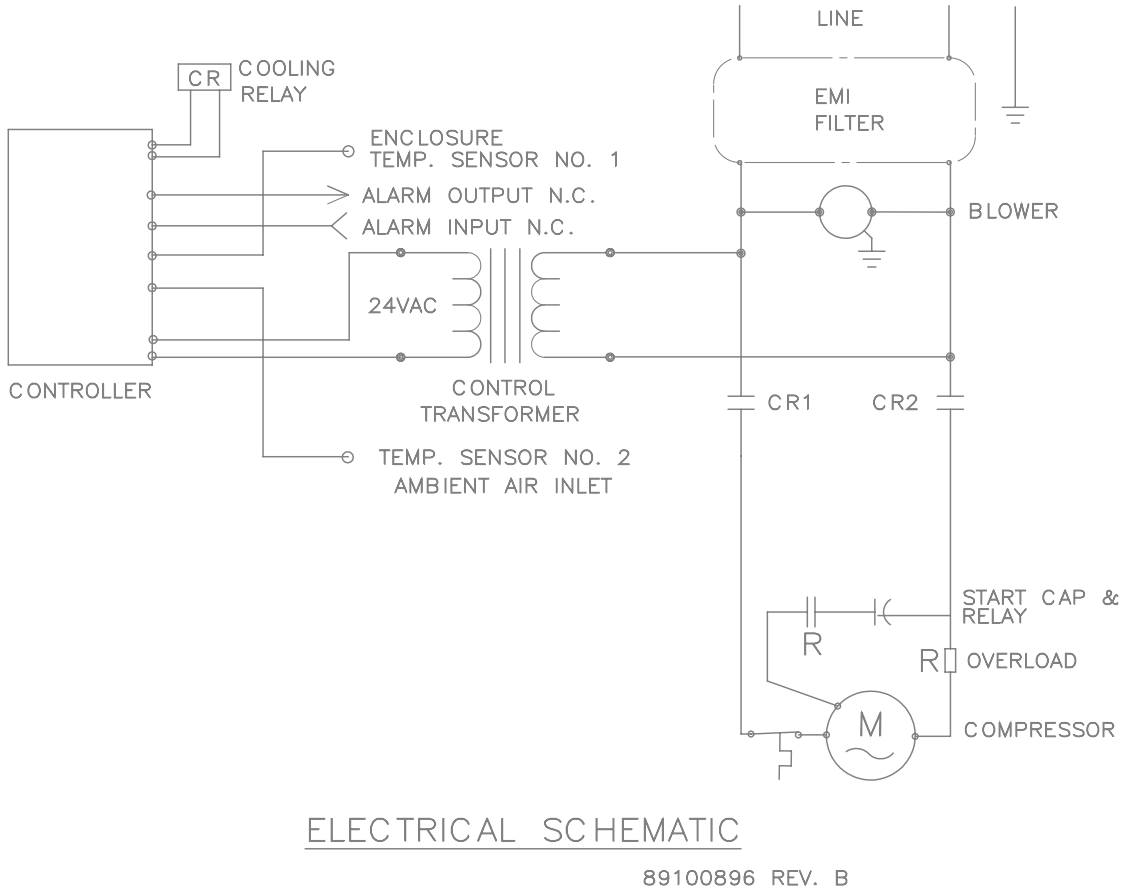

WIRE DIAGRAM, 230 V, LEVEL II AND III, 4000 BTU

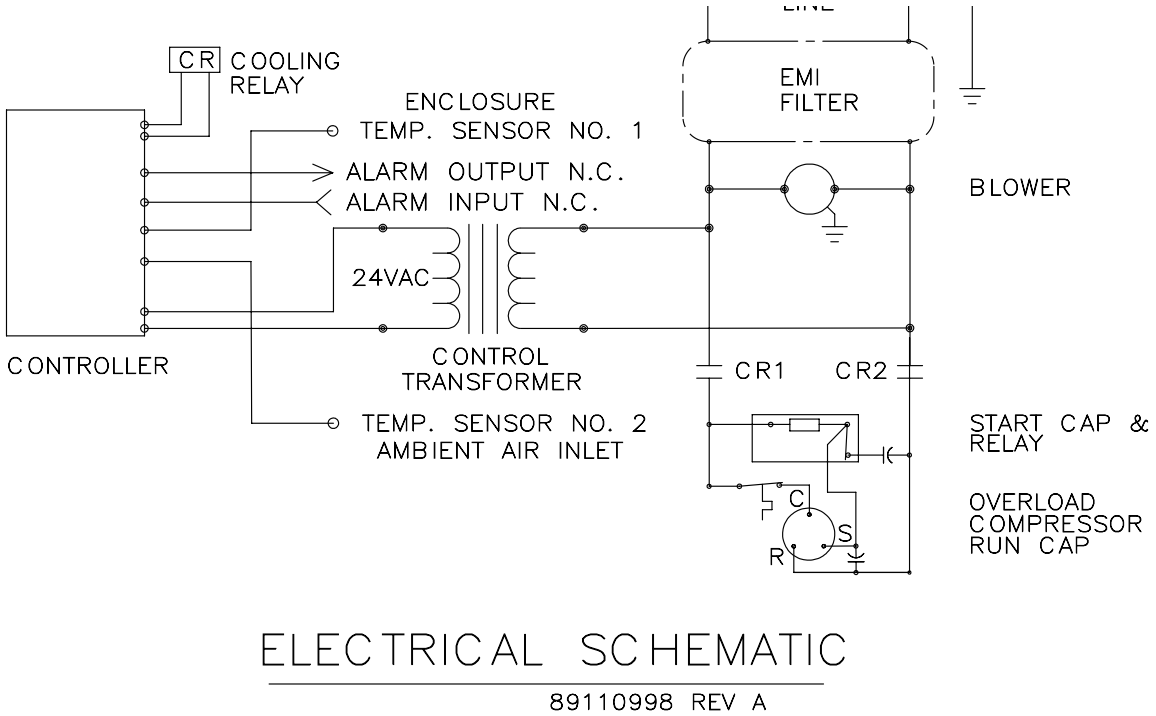

NOTE: For voltage, hertz, and options not shown in this manual, refer to the wiring diagram attached to the unit.

SCHEMATIC, 460 V LEVEL I, 4000 BTU

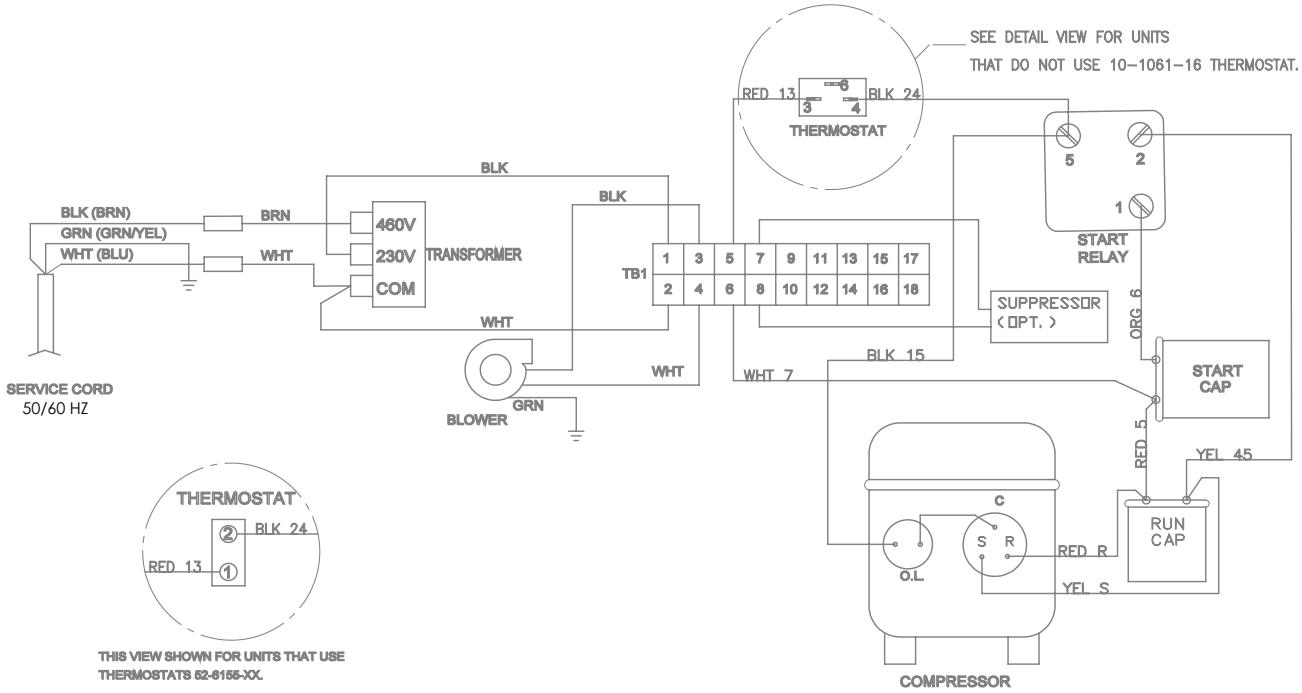

WIRE DIAGRAM 89111009 REV E

SCHEMATIC, 460 V LEVEL II AND III, 4000 BTU

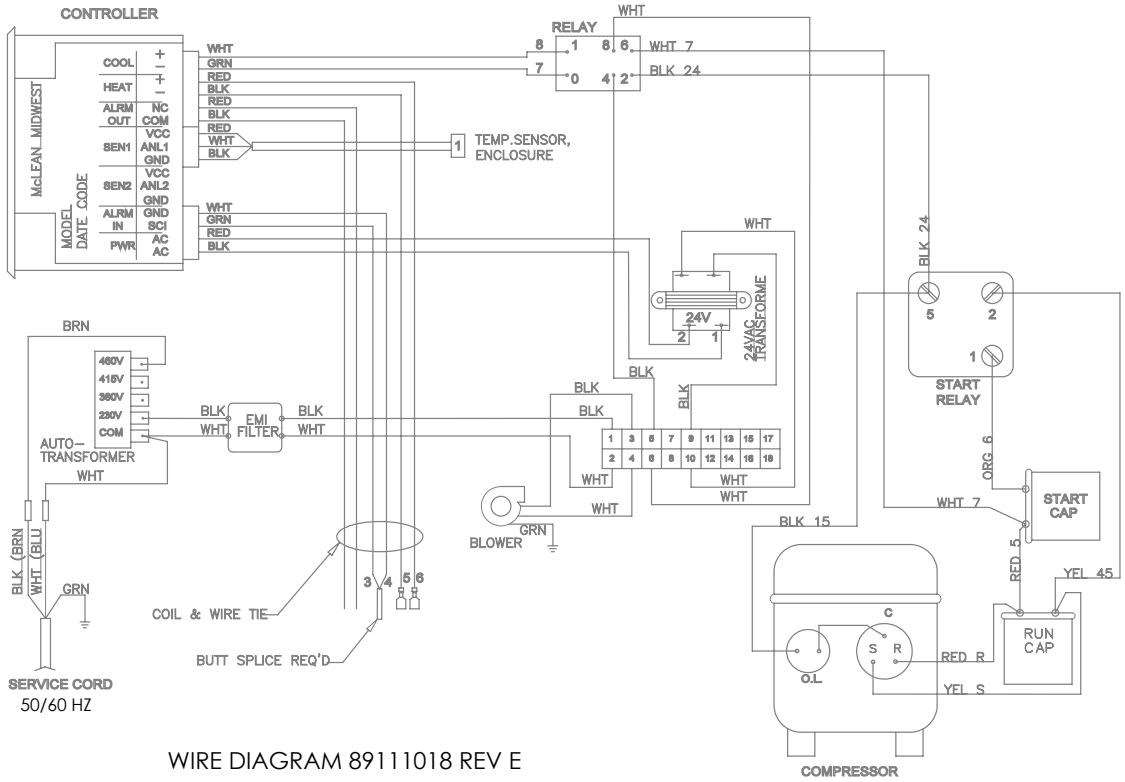

WIRE DIAGRAM 89111018 REV E

COMPONENTS LIST

Part Description	CR290216GXXX 115 Volt 50/60 Hz 3000 BTU	CR290226GXXX 230 Volt 50/60 Hz 2700 BTU	CR290246GXXX 460 Volt 50/60 Hz 2700 BTU
Blower, Condenser	29412110SP	29412010SP	29412010SP
Blower, Evaporator	29412110SP	29412110SP	29412010SP
Capacitor, Compressor, Start	89111993SP	89117017SP	89117017SP
Compressor	89108747SP	89108748SP	89108748SP
Thermal Overload, Compressor	89111994SP	89111997SP	89111997SP
Thermostat, SPST, 55-100F	10106116SP	10106116SP	10106116SP
Relay, Compressor, Start	89111992SP	89111995SP	89111995SP
Power Cord	Consult factory	Consult factory	Consult factory
Capacitor, Compressor, Run	N/A	N/A	N/A

Part Description	CR290416GXXX 115 Volt 50/60 HZ 4000 BTU	CR290426GXXX 230 Volt 50/60 HZ 4000 BTU	CR290446GXXX 460 Volt 50/60 HZ 4000 BTU
Blower, Condenser	29412110SP	29412010SP	29412010SP
Blower, Evaporator	29412110SP	29412110SP	29412010SP
Capacitor, Compressor, Start	89115350SP	89104096SP	89104096SP
Compressor	89100365SP	89104088SP	89104088SP
Thermal Overload, Compressor	89115348SP	89112198SP	89112198SP
Thermostat, SPST, 55-100F	10106116SP	10106116SP	10106116SP
Relay, Compressor, Start	89115349SP	89104095SP	89104095SP
Power Cord	Consult factory	Consult factory	Consult factory
Capacitor, Compressor, Run	N/A	89104097SP	89104097SP

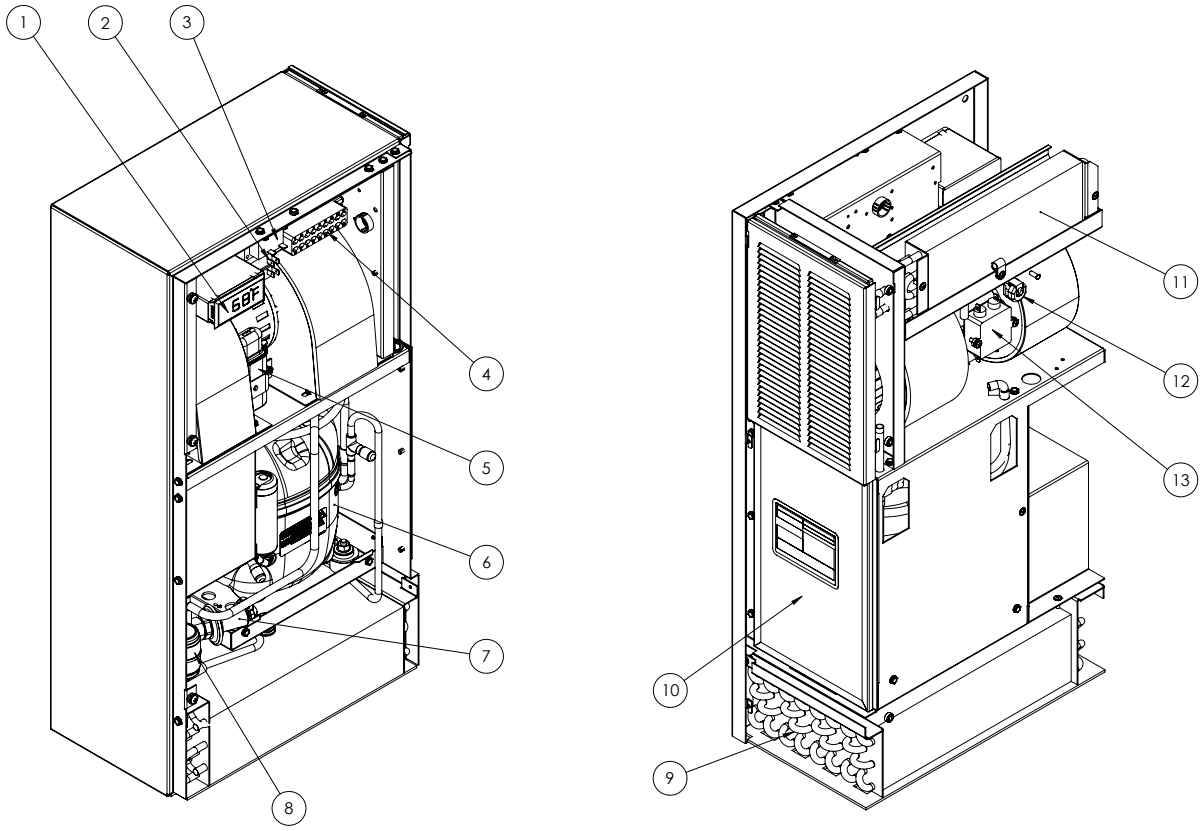

PARTS LIST

Part	Description	Part No.
1	Condenser Coil	29412010SP
2	Filter, drier, refrigerant	52602800SP
3	Compressor	See Components List
4	Hot Gas bypass valve (CR2904xx units only)	89100261SP
5	Evaporator coil	29410200SP
6	Inlet air filter, reusable aluminum	10100032SP
7	Blower	See Components List
8	Thermal Overload, Compressor	See Components List
9	Capacitor, compressor, start	See Components List
10	Capacitor, compressor	See Components List
11	Terminal block	086912SP
12	Power cord	Consult Factory
13	Temperature controller Level I Level II (digital)	10110614SP
14	Mounting Gasket Kit	29410002SP

TECHNICAL INFORMATION

DESIGN DATA

Model	Voltage	Hz	Phase	MOPD Amps	Full Load Cooling Amps	BTU/Hr @ Max Ambient Temperature °F/°C	Max Ambient Temperature °F/°C	Shipping Weight lb/kg
CR290216GXXX	115	50/60	1	15	9.2/7.8	2600/3000	131/55	98/44
CR290226GXXX	230	50/60	1	15	3.7/3.6	2600/2700	131/55	98/44
CR290246GXXX	460	50/60	1	15	2.0/1.9	2600/2700	131/55	108/49
CR290416GXXX	115	50/60	1	15	12.7/12.1	3500/4000	131/55	118/54
CR290426GXXX	230	50/60	1	15	4.7/4.9	3500/4000	131/55	118/54
CR290446GXXX	460	50/60	1	15	2.4/2.5	3500/4000	131/55	128/58

-XXX will be replaced with a three-digit number designating all desired options. Consult the factory for specific model numbers.

SYSTEM CONTROLS

LEVEL I TEMPERATURE CONTROLLER

The Level I controller is located inside the air conditioner. To adjust, disconnect power to the air conditioner and open the front panel by loosening the front panel screw. Refer to Parts List diagram on page 14 to locate the controller. Turn the controller adjustment screw slot counter-clockwise to increase and clockwise to decrease the temperature set point, see Figure 1. The thermostat cooling set point is indicated by the alignment of the adjustment screw slot with the dial decal. After completing adjustment, close the front panel and tighten the front panel screw. Restore power to the air conditioner for operation.

LEVEL II AND III TEMPERATURE CONTROLLER

The Level II and III controller mounted on the air conditioner front panel is factory set for standard operation. All operating parameters are programmable for custom applications. Refer to the Level II and III programming and Operating Instruction Manual, 10-1008-161.

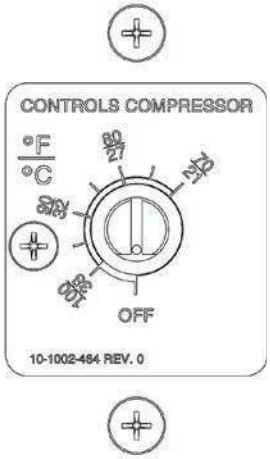

Figure 1
Level I control

TEMPERATURE CONTROL

The electromechanical thermostat is factory preset to 75 °F/23 °C. To change the temperature setting, refer to SYSTEM CONTROLS on page 15.

PRINCIPLES OF OPERATION

If electrical power to the air conditioner is interrupted and reapplied immediately (within 3 to 5 seconds), the compressor may not restart due to the high back pressure of the compressor. It takes a minimum of one (1) minute after shut-down for the compressor suction and discharge pressures to equalize in order for the air conditioner to restart.

Operating the air conditioner below the minimum ambient temperature or above the maximum ambient temperatures indicated on the nameplate voids all warranties.

It is recommended that the warranty section of this manual be read in order to familiarize yourself with parameters of restricted operation.

The moisture that the enclosure air can contain is limited. If moisture flows from the drain tube continuously this can only mean that ambient air is entering the enclosure. Be aware that frequent opening of the enclosure's door admits humid air which the air conditioner must then dehumidify.

MAINTENANCE

Performing preventative maintenance (PM) helps to keep your nVent HOFFMAN AC unit operating at the highest most efficient levels. Maintenance should be performed at least twice a year, more frequently when in challenging conditions, such as dusty, high humidity, high heat, oily or corrosive environments.

Product failures due to lack of maintenance may impact warranty coverage.

COMPRESSOR

The compressor requires no maintenance. It is hermetically sealed, properly lubricated at the factory and should provide years of satisfactory operating service. Visually inspect the compressor for proper operation, mounting, visible signs for exposure to high heat.

Should the refrigerant charge be lost, recharging ports (access fittings) on the suction and discharge sides of the compressor are provided for recharging and/or checking suction and discharge pressures.

Under no circumstances should the access fitting covers be loosened, removed or tampered with unless authorized refrigeration repair service personnel.

Breaking of seals on compressor access fittings during warranty period will void warranty on hermetic system.

Recharging ports are provided for the ease and convenience of reputable refrigeration repair service personnel for recharging the air conditioner.

INLET AIR FILTER

Proper maintenance of the ambient air filter is critical to normal operation of the air conditioner. If filter maintenance is delayed or ignored, this can result in decreased performance and/or premature failure of the compressor and other air conditioner components.

Do not run the air conditioner for extended periods of time with the filter removed. Particles of dust, lint, etc., can plug the fins of the condenser coil which will give the same reaction as a plugged filter. The condenser coil is not visible through the filter opening, so protect it with a filter. Continued operation under the above conditions can and will damage and shorten compressor life.

HOW TO REMOVE, CLEAN OR INSTALL A NEW INLET AIR FILTER

Research Products (RP) aluminum washable air filters are designed to provide excellent filtering efficiency with a high dust holding capacity and a minimum amount of resistance to air flow. Since they are constructed entirely of aluminum, they are lightweight and easy to service. Optimum filter performance is maintained by recoating the filters after washing with RP Super Filter Coat adhesive. To achieve maximum performance from your air handling equipment, air filters should be cleaned on a regular basis.

The inlet air filter is located behind the right side panel. To access the filter, pull from slot on top cover. The filter may now be cleaned or a new filter installed.

Cleaning Instructions:

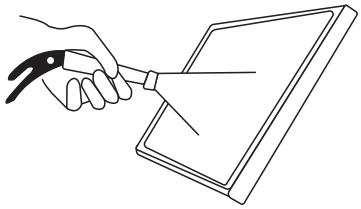

1. Flush the filter with warm water from the exhaust side to the intake side. **DO NOT USE CAUSTICS.**

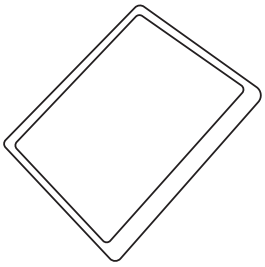

2. After flushing, allow filter to drain. Placing it with a corner down will assure complete drainage.

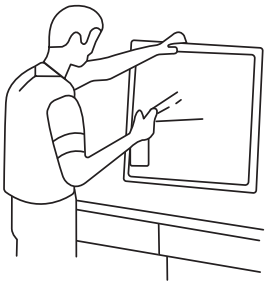

3. Recoat the filters with RP Super Filter Coat adhesive. When spraying filter do so from both sides for maximum concentration of adhesive.

CONDENSER AND EVAPORATOR AIR MOVERS

Blower motor requires no maintenance. All bearings, shafts, etc. are lubricated for the life of the motor during manufacturing.

If one of the condenser impeller motors (ambient impellers) should fail, it is not necessary to remove the air conditioner from the cabinet or enclosure to replace the blower. The condenser blower is mounted on its own bulkhead and is easily accessible by removing the front cover.

⚠ CAUTION:

Operation of the air conditioner in areas containing airborne caustics or chemicals can rapidly deteriorate filters, condenser coils, blowers and motors, etc. Contact nVent Equipment Protection for special recommendations.

REFRIGERANT LOSS

Each air conditioner is thoroughly tested prior to leaving the factory to insure against refrigeration leaks. Shipping damage or microscopic leaks not found with sensitive electronic refrigerant leak detection equipment during manufacture may require repair or recharging of the system. This work should only be performed by qualified professionals, generally available through a local, reputable air conditioning repair or service company.

Refer to the data on the nameplate which specifies the type of refrigerant and the charge size in ounces.

Before recharging, make sure there are no leaks and that the system has been properly evacuated into a deep vacuum.

PREVENTATIVE MAINTENANCE/INSPECTION

Maintenance/Inspection Recommendations (Perform at least 2 times per year – more frequently as required by operational environment)		**Last Completed**			
Check Point	**Description**	**Date**	**Date**	**Date**	**Date**
Operational Inspection	Run unit through all modes of operation and record temperatures, voltages, and amperes Comments:				
Visual Inspection	Visually inspect unit for damage, cleanliness, missing, loose, or broken parts Comments:				
Filter Maintenance	Inspect, clean, and replace filter as necessary Comments:				
Clean Unit	Inspect and clean coils, fans/blowers, louvers, air inlets/outlets, interior and exterior of unit as required Comments:				
Controller Cycle Sequence	Cycle the controller through all modes of operation to ensure proper cycling and temperature setpoint operation. Adjust to proper setting (Typically 25°–30°) Comments:				
Air Flow and Circulation	Inspect AC unit, cabinet, and surrounding area to ensure adequate airflow to and from the unit on both the inlet and outlet air channels for the ambient and cabinet air Comments:				
Seals, Gaskets, and Leaks	Inspect and repair the seals, gaskets, and access holes around the unit and/or cabinet that show signs of leaking air and/or moisture Comments:				
Condensate and Drains	Inspect and clean the condensate pans and drains to ensure proper drainage and dissipation of moisture Comments:				
Electrical/Wiring	Inspect for loose, damaged, corroded, or chaffing wiring and connections. Tighten, insulate, or tie-up wires as required Comments:				
Options and Accessories	Check operation and functionality of optional and accessory items such as digital display/controller, door switches, alarm switches, air baffles/deflectors, etc. Comments:				
Refrigeration System	Inspect refrigeration tubing/lines for signs of leaks, rubbing, corrosion, or damage. Check the compressor for proper operation, mounting, and visible signs of exposure to high heat Comments:				
Maintenance Records	Update maintenance records on the unit and in the management system Comments:				

TROUBLE SHOOTING

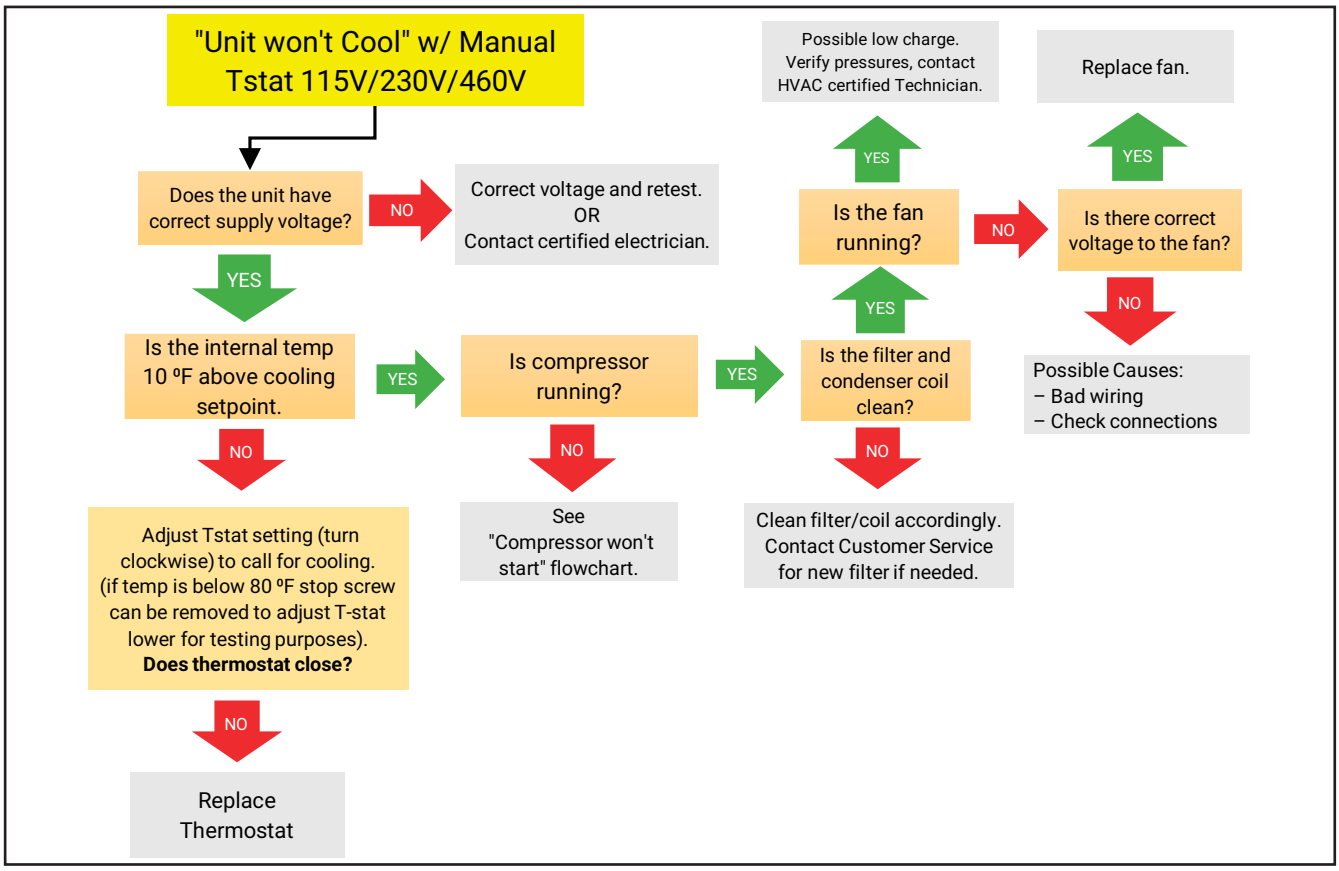

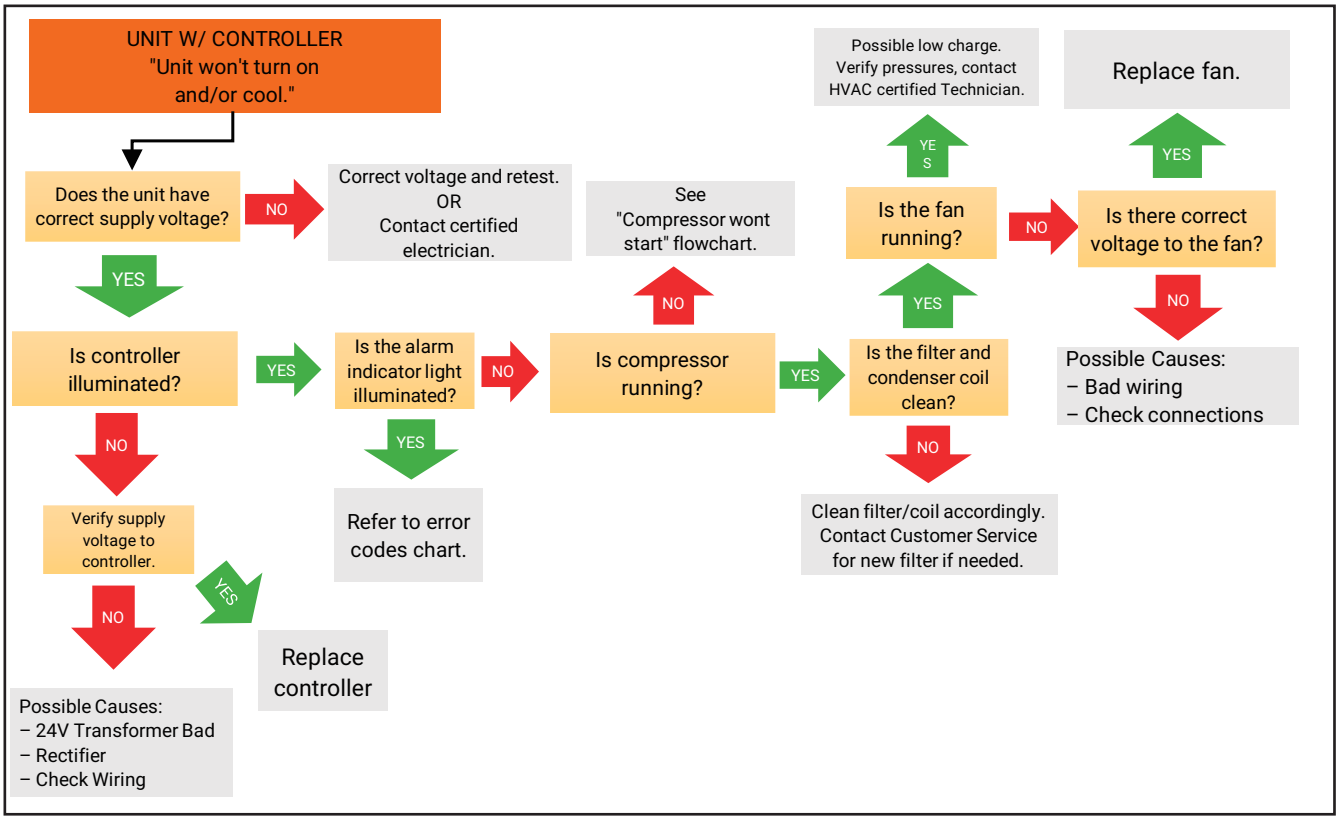

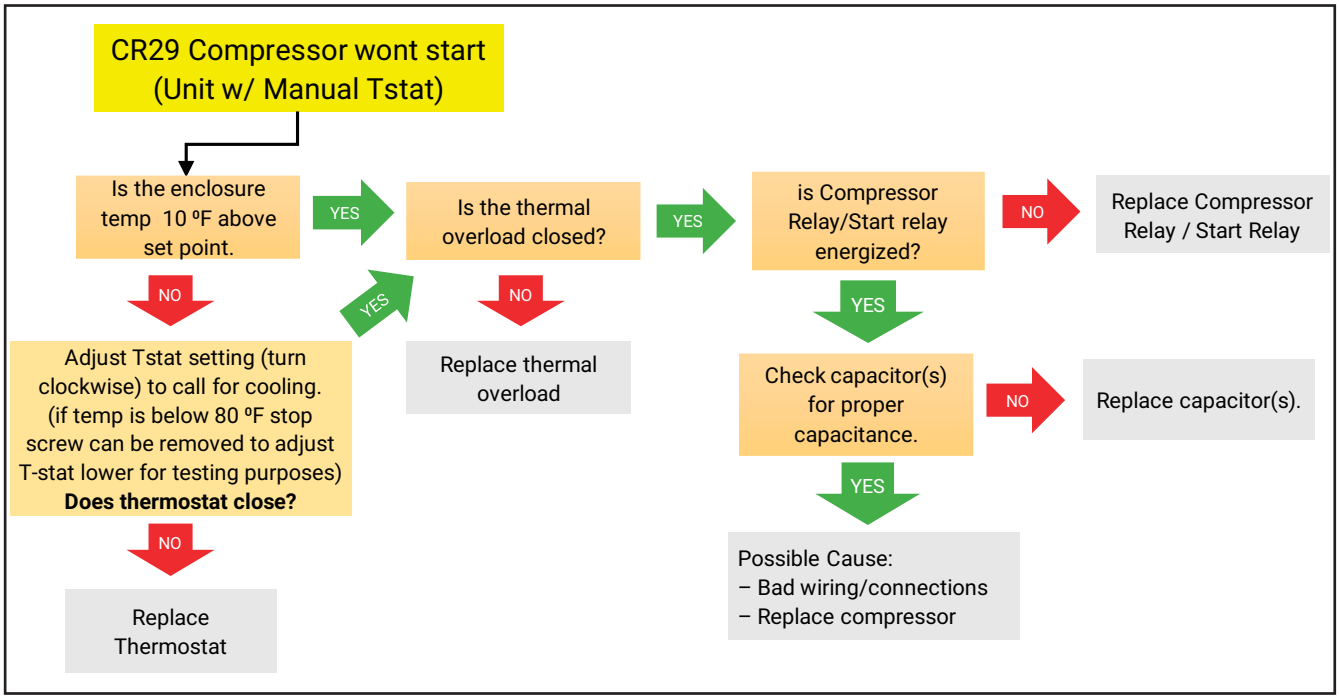
CR29 Compressor wont start
(Unit w/ Manual Tstat)
Is the enclosure temp 10 ºF above set point.
YES
Is the thermal overload closed?
YES
is Compressor Relay/Start relay energized?
NO
Replace Compressor Relay / Start Relay
NO
YES
NO
Replace thermal overload
YES
Check capacitor(s) for proper capacitance.
NO
Replace capacitor(s).
Adjust Tstat setting (turn clockwise) to call for cooling. (if temp is below 80 ºF stop screw can be removed to adjust T-stat lower for testing purposes) Does thermostat close?
YES
Possible Cause:
– Bad wiring/connections
– Replace compressor
NO
Replace Thermostat

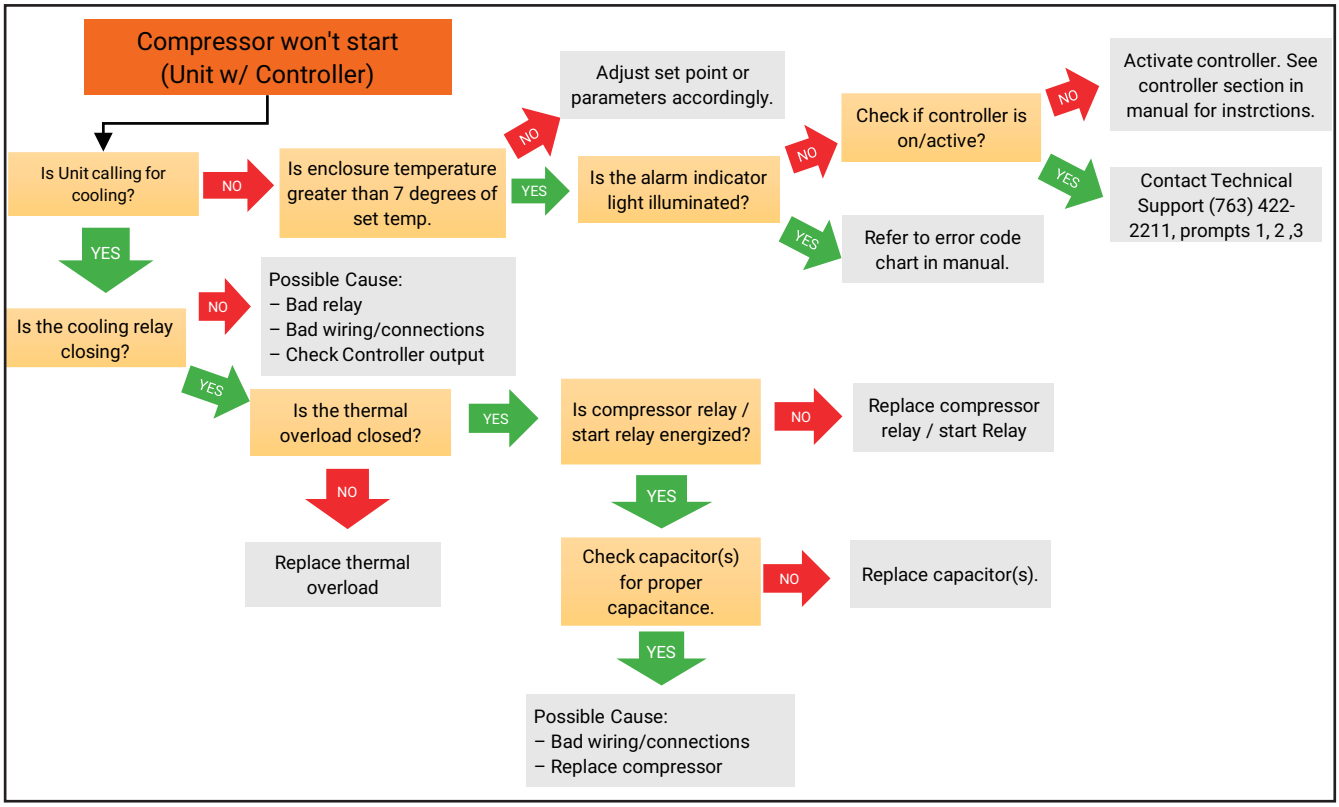
Compressor won't start
(Unit w/ Controller)
Adjust set point or parameters accordingly.
Check if controller is on/active?
NO
Activate controller. See controller section in manual for instrctions.
Is Unit calling for cooling?
NO
Is enclosure temperature greater than 7 degrees of set temp.
NO
YES
Is the alarm indicator light illuminated?
NO
YES
Contact Technical Support (763) 422-2211, prompts 1, 2 ,3
YES
Refer to error code chart in manual.
YES
Possible Cause:
– Bad relay
– Bad wiring/connections
– Check Controller output
NO
Is the cooling relay closing?
YES
Is the thermal overload closed?
YES
Is compressor relay / start relay energized?
NO
Replace compressor relay / start Relay
NO
Replace thermal overload
YES
Check capacitor(s) for proper capacitance.
NO
Replace capacitor(s).
YES
Possible Cause:
– Bad wiring/connections
– Replace compressor

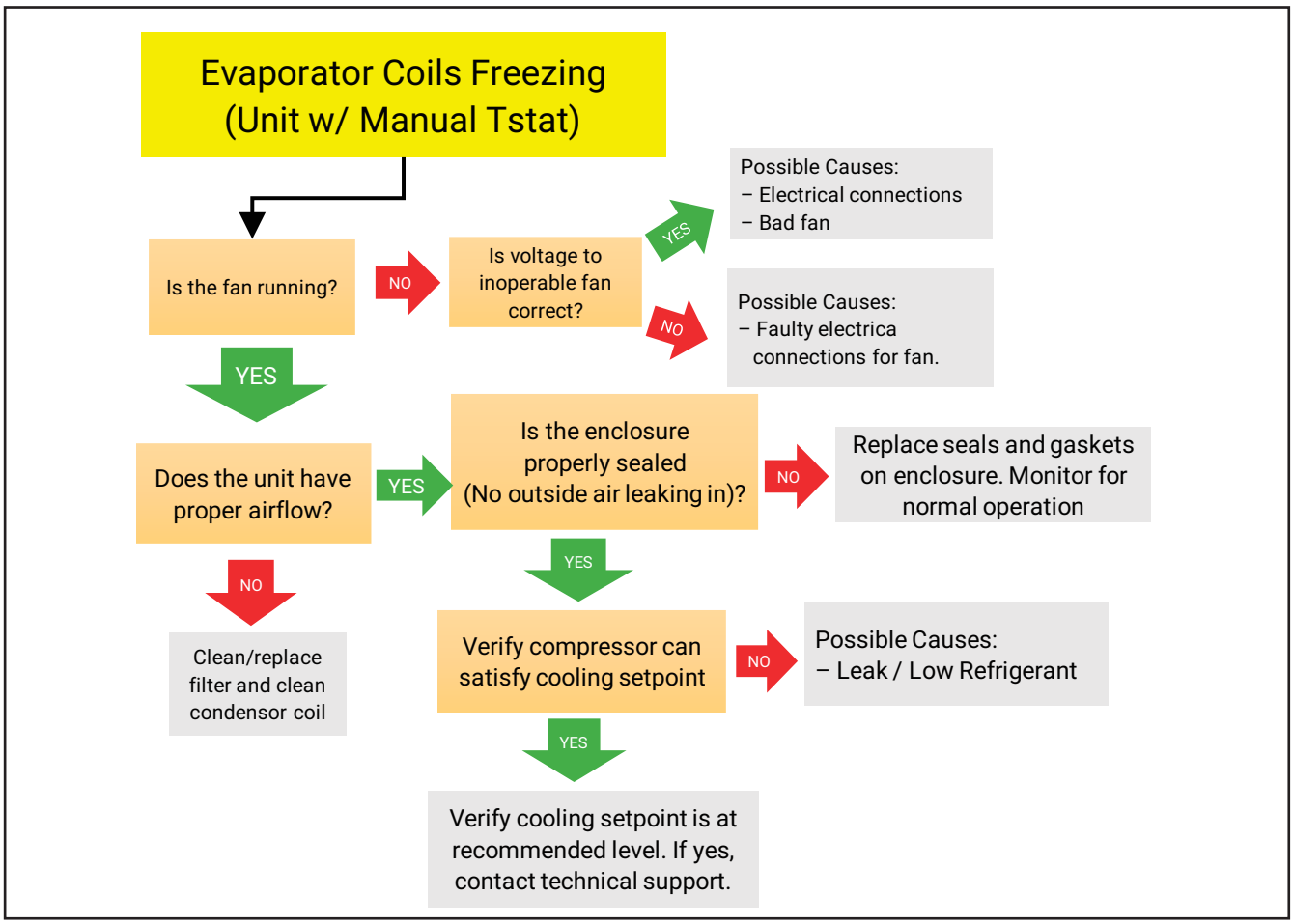
Evaporator Coils Freezing
(Unit w/ Manual Tstat)
Is the fan running?
NO
Is voltage to inoperable fan correct?
YES
Possible Causes:
– Electrical connections
– Bad fan
NO
Possible Causes:
– Faulty electrica connections for fan.
YES
Does the unit have proper airflow?
YES
Is the enclosure properly sealed (No outside air leaking in)?
NO
Replace seals and gaskets on enclosure. Monitor for normal operation
NO
Clean/replace filter and clean condensor coil
YES
Verify compressor can satisfy cooling setpoint
NO
Possible Causes:
– Leak / Low Refrigerant
YES
Verify cooling setpoint is at recommended level. If yes, contact technical support.

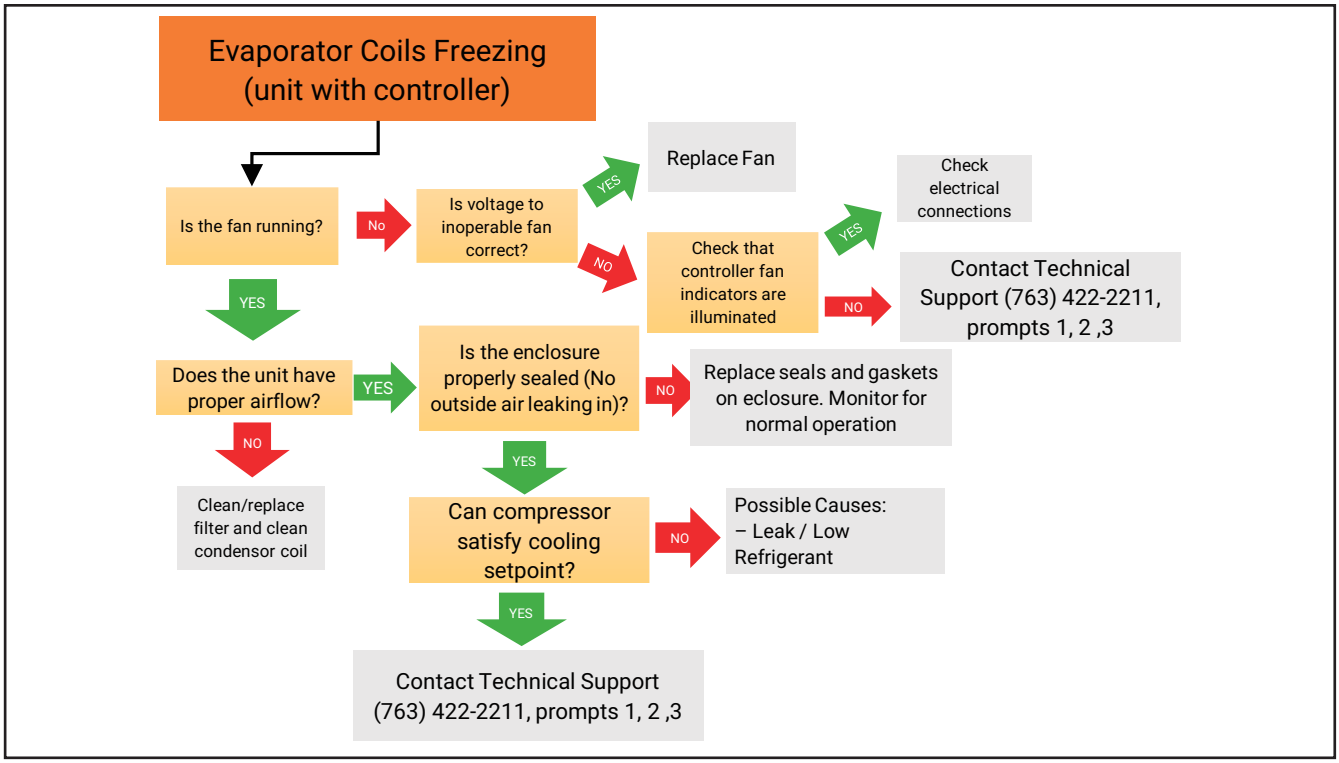
Evaporator Coils Freezing
(unit with controller)
Is the fan running?
No
Is voltage to inoperable fan correct?
YES
Replace Fan
NO
Check that controller fan indicators are illuminated
YES
Check electrical connections
NO
Contact Technical Support (763) 422-2211, prompts 1, 2 ,3
YES
Does the unit have proper airflow?
YES
Is the enclosure properly sealed (No outside air leaking in)?
NO
Replace seals and gaskets on eclosure. Monitor for normal operation
NO
Clean/replace filter and clean condensor coil
YES
Can compressor satisfy cooling setpoint?
NO
Possible Causes:
– Leak / Low Refrigerant
YES
Contact Technical Support (763) 422-2211, prompts 1, 2 ,3

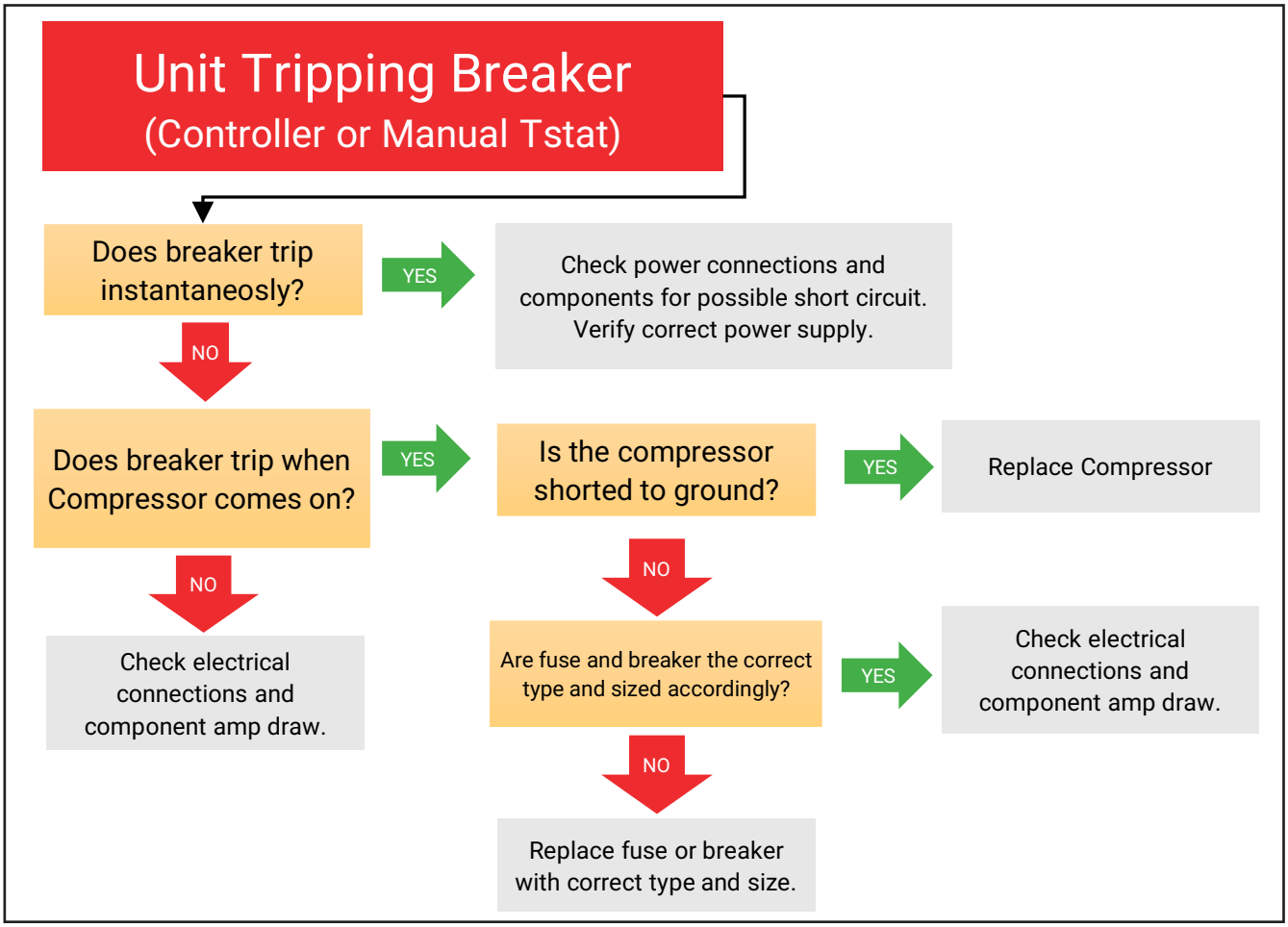
Unit Tripping Breaker
(Controller or Manual Tstat)
Does breaker trip instantaneosly?
YES
Check power connections and components for possible short circuit. Verify correct power supply.
NO
Does breaker trip when Compressor comes on?
YES
Is the compressor shorted to ground?
YES
Replace Compressor
NO
Check electrical connections and component amp draw.
NO
Are fuse and breaker the correct type and sized accordingly?
YES
Check electrical connections and component amp draw.
NO
Replace fuse or breaker with correct type and size.

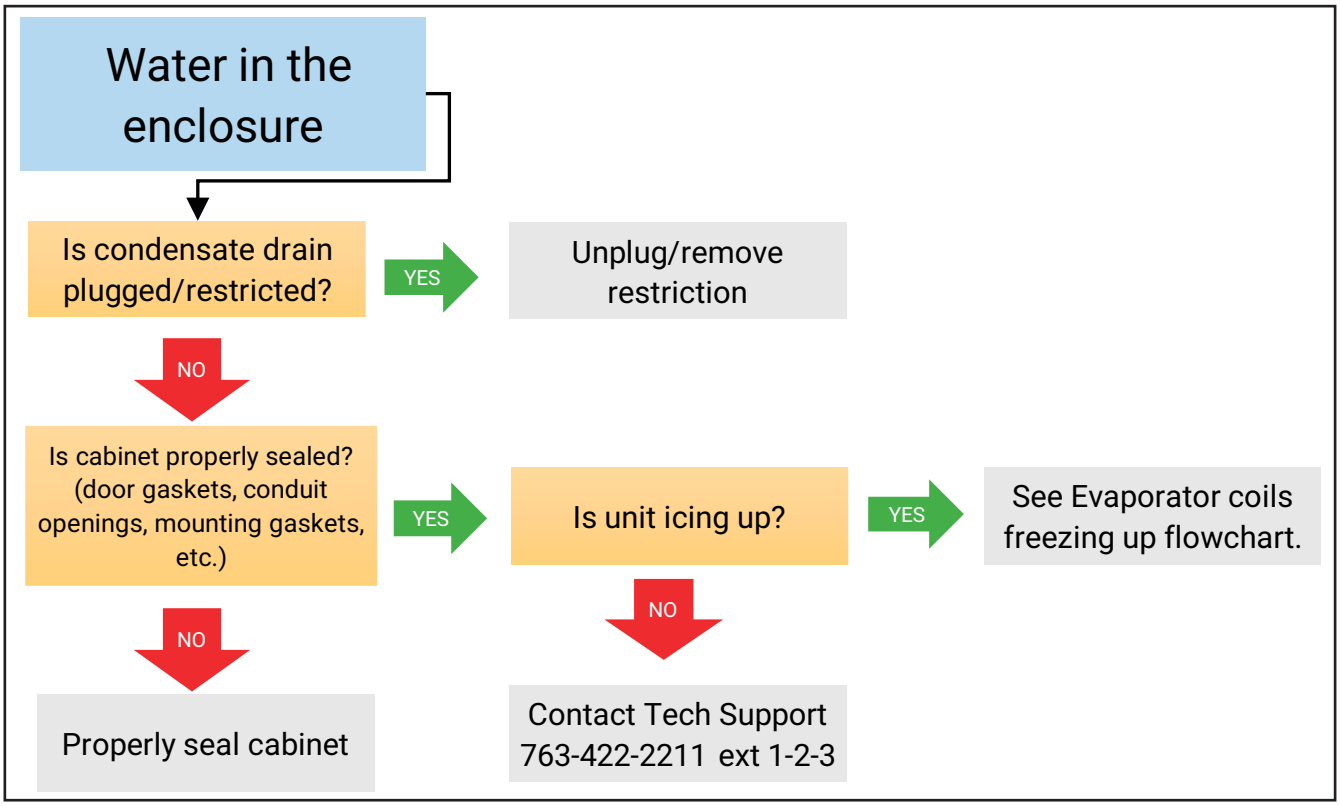
Water in the enclosure
Is condensate drain plugged/restricted?
YES
Unplug/remove restriction
NO
Is cabinet properly sealed? (door gaskets, conduit openings, mounting gaskets, etc.)
YES
Is unit icing up?
YES
See Evaporator coils freezing up flowchart.
NO
Properly seal cabinet
NO
Contact Tech Support 763-422-2211 ext 1-2-3

For Additional technical support:

- Call 763-422-2211 or
- Email cooling.service@nVent.com or
- Download Field Service Request (FSR) from:
  http://HOFFMAN.nVent.com/en-us/cooling-field-service-request

F-GAS INFORMATION

	CR290216GXXX	CR290226GXXX CR290246GXXX CR290416GXXX CR290426GXXX CR290446GXXX
Refrigerant Kühlmittel Chłodziwo	R513A	R513A
GWP	573	573
Factory Charge Füllmenge durch Hersteller Opłata Fabryczna	340 Grams 340 Gramm 340 Gramów	312 Grams 312 Gramm 312 Gramów
CO_2 Equivalent CO_2 Equivalent CO_2 Ekwilalent	0.195 Tons 0,195 Tonnen 0,195 Tony	0.179 Tons 0,179 Tonnen 0,179 Tony

nVent
2100 Hoffman Way
Anoka, MN 55303 USA
+1.763.422.2211
+1.763.576.3200
https://nVent.com/HOFFMAN

Our powerful portfolio of brands:

CADDY ERICO HOFFMAN ILSCO RAYCHEM SCHROFF

©2024 nVent. All nVent marks and logos are owned or licensed by nVent Services GmbH or its affiliates. All other trademarks are the property of their respective owners. nVent reserves the right to change specifications without notice.

89104461