PROLINE NETWORK SWITCH CABINET

INDUSTRY STANDARDS

EIA 310-D

APPLICATION

PROLINE Network Switch cabinet is a pre-engineered solution for the thermal and cable management needs of large network core switches. It is designed to meet Cisco 6509, 6513, 7009 and 7018 Series network switch requirements in server rooms with a hot aisle/cold aisle cabinet layout. (For other Cisco switch models, contact Hoffman for cabinet applications.) Cabinet provides for both patch cords and permanent link cables with support from vertical to horizontal transitions.

FEATURES

- **Meets all CISCO 6509, 6513, 7009 and 7018 Series network switch installation and operational requirements**
- Integrated right-to-left airflow ducting ensures core switch is supplied with air from cold aisle
- Front door has keyed multi-point vault-style latch system and central key lock to ensure security
- Split overlapping rear doors provide quick access to equipment without blocking aisles (7009 and 7018 Series have split front and rear doors)
- Front vertical cable manager has integral hinged doors to house, protect and provide attractive appearance
- Front cable manager uses arrowhead support fingers to support and ensure proper bend radius, provide increased cable capacity and facilitate assembly
- Available standard with sides or without for use in ganged applications
- Top-mount sliding gland plate provides large opening for cables, pre-terminated cable bundles and patch panels
- Open base allows under floor cable entry
- Network core switch shelf located at bottom of cabinet (2 RU on 65089/6513 Series; 0 RU on 7018 Series)

6509 and 6513 Series only:

- Attractive, rigid front door made of aluminum extrusions and formed perforated steel, with more than 70 percent open space for free flow of cool air to equipment
- Rear upper-mounted 4 RU equipment mounting angles provide for PDUs, fiber-to-copper transition, splitter equipment and other 19-in. rack-mounted equipment
- Rear horizontal and vertical cable management provide support and transition of permanent link cables

SPECIFICATIONS

- Switch shelf is included with cabinet
- Front set of 19-in. mounting rails are tapped (10-32) per EIA standards
- Top and sides are formed steel
- Sides secured with fasteners

FINISH

RAL 9005 black textured, low-gloss polyester powder paint over pretreated steel.

LOAD RATING

6509 and 6513 Series switch shelf static load rating 500 lb. (227 kg).
7009 and 7018 Series switch shelf static load rating 1000 lb. (454 kg).
Static Load Rating: 2500 lb. (1134 kg)
A cabinet has a static load when:

- it is in its final, permanent, fully secured location, and
- its load is uniformly applied to the two sets of rack-mounting angles

Never move a cabinet with its maximum static load applied.
Contact Hoffman if further information is needed.

BULLETIN: DPVD

Standard Product **6509 and 6513 Series**

Catalog Number	AxBxC mm	AxBxC in.	Description
PNS20810B	1991 x 808 x 999	78.37 x 31.80 x 39.34	Switch Cabinet
PNS20810BNS	1991 x 799 x 999	78.37 x 31.46 x 39.34	Switch Cabinet, no sides
PNS20811B	1991 x 808 x 1099	78.37 x 31.80 x 43.28	Switch Cabinet
PNS20811BNS	1991 x 799 x 1099	78.37 x 31.46 x 43.28	Switch Cabinet, no sides
PNS20812B	1991 x 808 x 1199	78.37 x 31.80 x 47.22	Switch Cabinet
PNS20812BNS	1991 x 799 x 1199	78.37 x 31.46 x 47.22	Switch Cabinet, no sides
PNS21810B	2161 x 806 x 999	85.08 x 31.74 x 39.33	Switch Cabinet
PNS21811B	2161 x 806 x 1099	85.08 x 31.74 x 43.27	Switch Cabinet
PNS21812B	2161 x 806 x 1199	85.08 x 31.74 x 47.20	Switch Cabinet
PNS24810B	2411 x 806 x 999	94.92 x 31.74 x 39.33	Switch Cabinet
PNS24811B	2411 x 806 x 1099	94.92 x 31.74 x 43.27	Switch Cabinet
PNS24812B	2411 x 806 x 1199	94.92 x 31.74 x 47.20	Switch Cabinet

Cable Fill Rate for Front Vertical Cable Manager-Each Side @ 60% Fill (6509 and 6513 Series)

Cabinet Width	Cross Section Area	5E .22-in. Diameter	6 .25-in. Diameter	6A .30-in. Diameter
800 mm	34.48 in.^{2}	631	488	339

6509/6513 Series

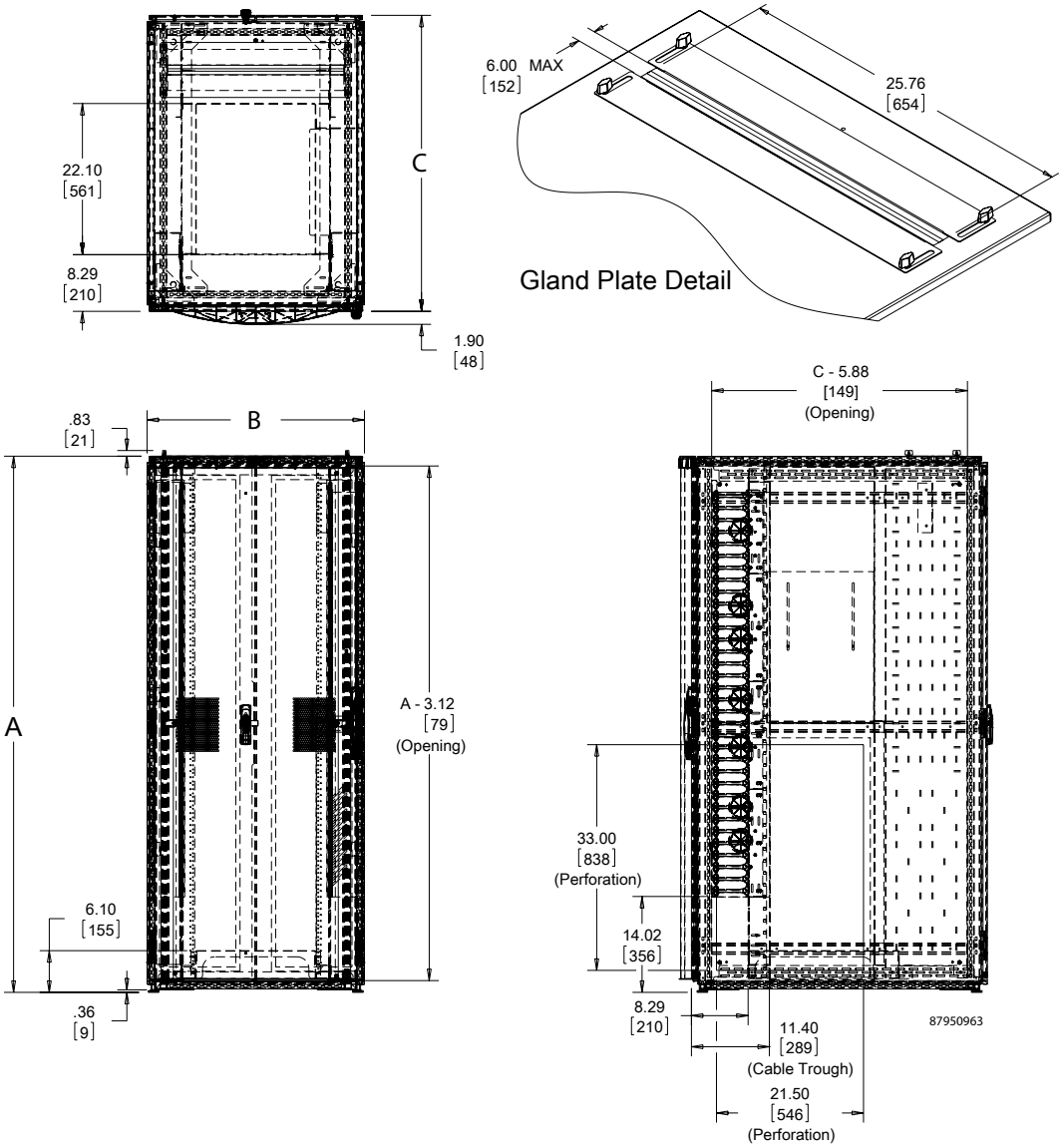

Standard Product **7009 and 7018 Series**

Catalog Number	mm	in.	Description
PNS201012B	1991 x 1008 x 1199	78.39 x 39.69 x 47.20	Switch Cabinet
PNS201012BNS	1991 x 999 x 1199	78.39 x 39.33 x 47.20	Switch Cabinet, no sides
PNS211012B	2161 x 1006 x 1199	85.08 x 39.62 x 47.20	Switch Cabinet
PNS241012B	2411 x 1006 x 1199	94.92 x 39.62 x 47.20	Switch Cabinet

Cable Fill Rate for Front Vertical Cable Manager-Each Side @ 60% Fill (7009 and 7018 Series)

Cabinet Width	Cross Section Area	5E .22-in. Diameter	6 .25-in. Diameter	6A .30-in. Diameter
1000 mm	34.48 in.^{2}	1736	1344	933

7009/7018 Series

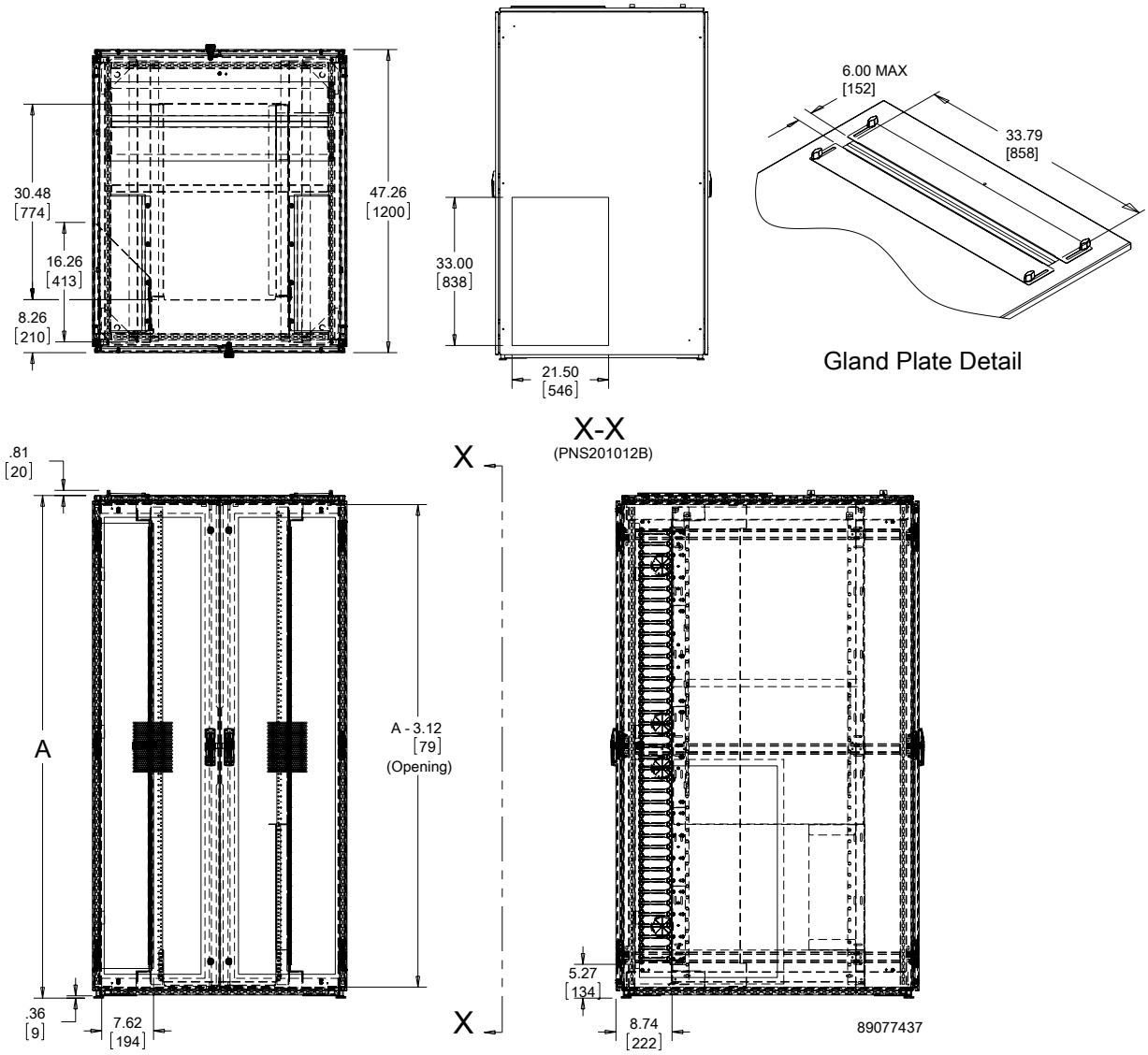

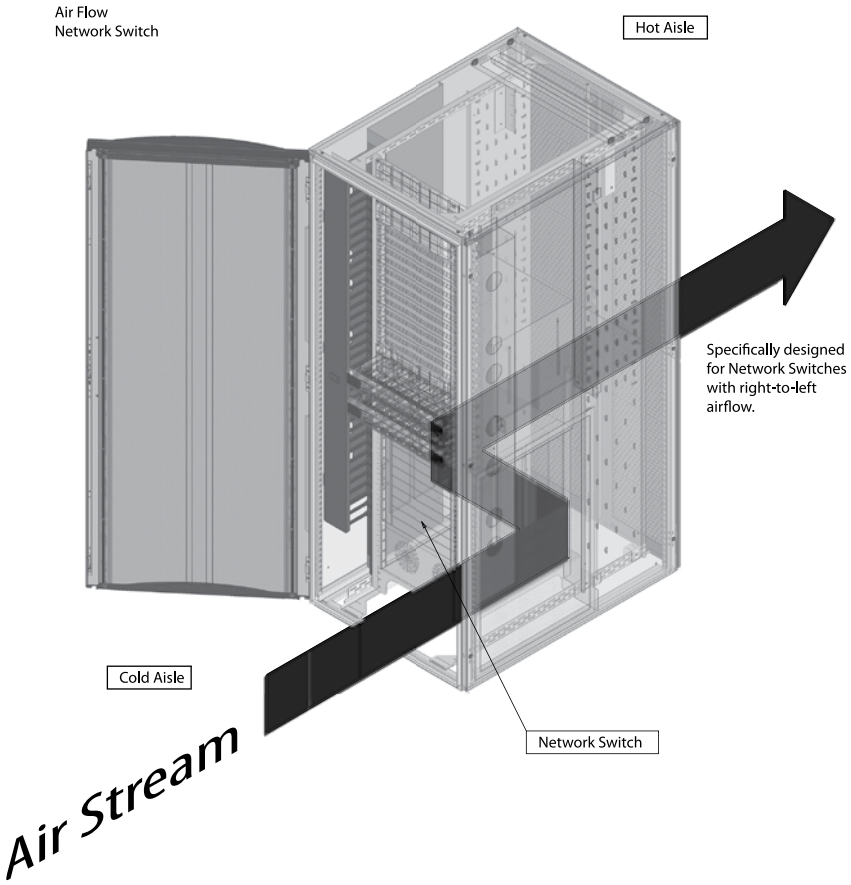
Air Flow
Network Switch
Hot Aisle
Specifically designed for Network Switches with right-to-left airflow.
Cold Aisle
Network Switch
Air Stream

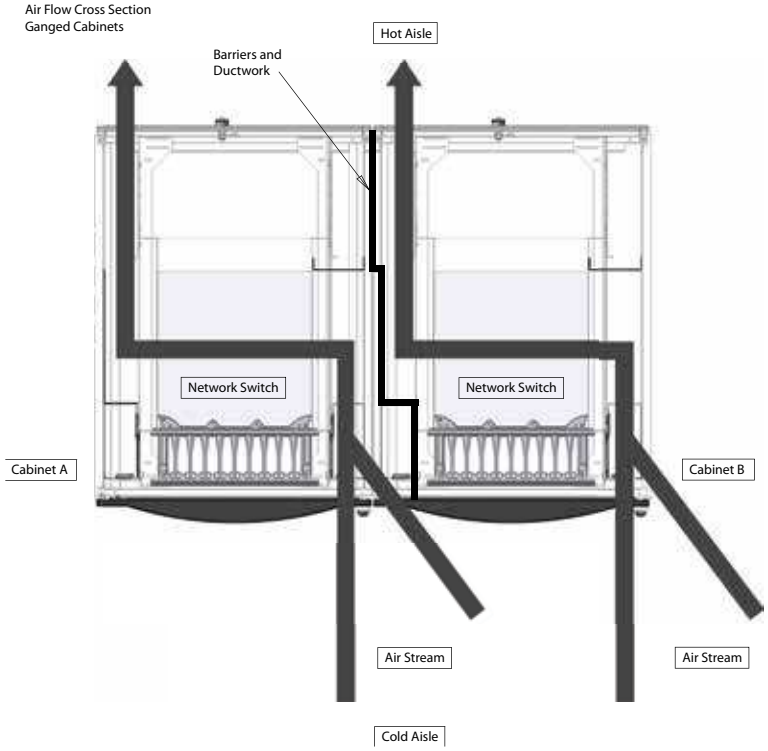
Air Flow Cross Section
Ganged Cabinets
Hot Aisle
Barriers and Ductwork
Network Switch
Network Switch
Cabinet A
Cabinet B
Air Stream
Air Stream
Cold Aisle

6509 and 6513 Series

Front View

Rear View

7009/7018 Series

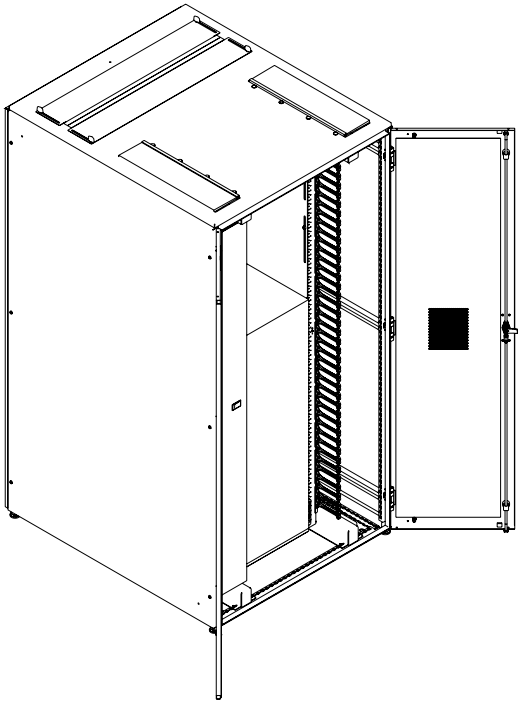

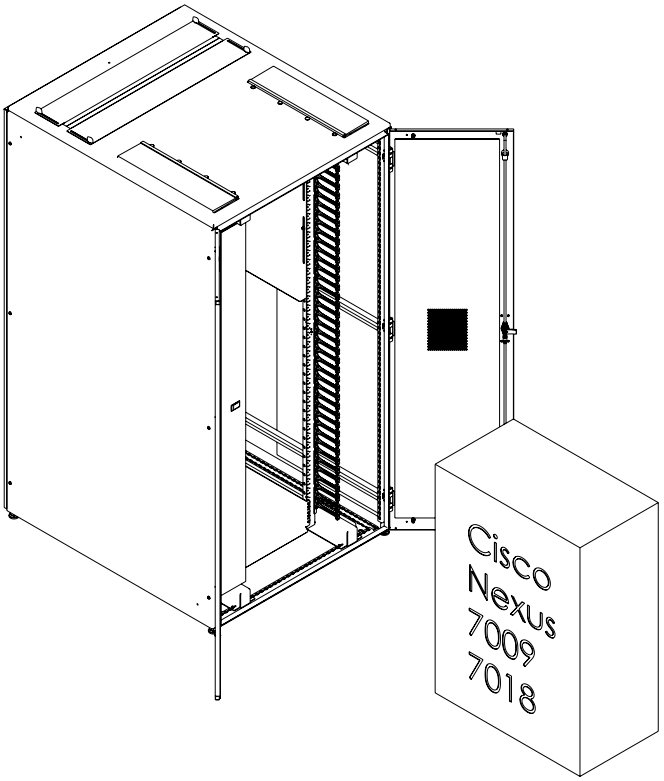

89078595