PROAIR
AIR CONDITIONER
CR23 MODEL
INSTRUCTION MANUAL

© 2020 nVent
P/N 89112522

TABLE OF CONTENTS

Warranty and Return Policy 2
RECEIVING THE AIR CONDITIONER 3
HANDLING AND TESTING THE AIR CONDITIONER 3
INSTALLATION INSTRUCTIONS 4
SYSTEM CONTROLS 4
- Level I Temperature Controller 4
- Level II and III Temperature Controller 4

TECHNICAL INFORMATION 5
- DESIGN DATA 5
- DIMENSION DRAWING 5
- Mounting Gasket Kit 6
  - Design Notes 6
- Mounting Cutout Dimensions 6
- CR23 115V Parts List 7
- CR23 230V/460V Parts List 8
- Wire Diagrams and Schematics 9
  - Wire Diagram, Level I, 115V 9
  - Wire Diagram, Level I with Electric Heater, 115V 10
  - Wire Diagram, Level II and III, 115V 12
  - Wire Diagram, Level II and III with Electric Heater, 115V 14
  - Wire Diagram, Level I, 230V 16
  - Wire Diagram, Level II and III, 230V 18
  - Wire Diagram, Level I, 460V 20

TEMPERATURE CONTROL 22
PRINCIPLES OF OPERATION 22
MAINTENANCE 22
- Compressor 22
- Inlet Air Filter 22
- How To Remove, Clean or Install a New Inlet Air Filter 23
- Condenser and Evaporator Air Movers 23
- Refrigerant Loss 23

TROUBLE SHOOTING 24
- Basic Air Conditioning Trouble Shooting Check List 24
- Symptoms and Possible Causes: 25

F-GAS INFORMATION 25

NOTE: Some of the information in this manual may not apply if a special unit was ordered. If additional drawings for a special unit are necessary, they have been inserted. Contact Pentair Equipment Protection if further information is required.

WARRANTY AND RETURN POLICY

https://hoffman.nvent.com/en/hoffman/warranty-information

© 2020 nVent

RECEIVING THE AIR CONDITIONER

Inspect the air conditioner. Check for concealed damage that may have occurred during shipment. Look for dents, scratches, loose assemblies, evidence of oil, etc. Damage evident upon receipt should be noted on the freight bill. Damage should be brought to the attention of the delivering carrier -- NOT to nVent Equipment Protection -- within 15 days of delivery. Save the carton and packing material and request an inspection. Then file a claim with the delivering carrier.

nVent Equipment Protection cannot accept responsibility for freight damages; however, we will assist you in any way possible.

HANDLING AND TESTING THE AIR CONDITIONER

If the air conditioner has been in a horizontal position, be certain it is placed in an upright, vertical or mounting position for a minimum of five (5) minutes before operating.

⚠ CAUTION

Do not attempt to operate the air conditioner while it is horizontal or on its side, back or front. The refrigeration compressor is filled with lubricating oil. This will cause permanent damage to the air conditioner and also voids the warranty.

TEST FOR FUNCTIONALITY BEFORE MOUNTING THE AIR CONDITIONER TO THE ENCLOSURE.

Refer to the nameplate for proper electrical current requirements, and then connect the power cord to a properly grounded power supply. Minimum circuit ampacity should be at least 125% of the amperage shown in the design data section for the appropriate model. No other equipment should be connected to this circuit to prevent overloading.

Operate the air conditioner for five (5) to ten (10) minutes. No excessive noise or vibration should be evident during this run period. The condenser blower (ambient air), the evaporator blower (enclosure air), and the compressor should be running.

Condenser air temperatures should be warmer than normal room temperatures within a few minutes.

The compressor is provided with automatic reset thermal overload protection. This thermo-switch is located and mounted inside the plastic enclosure clipped to the compressor. The switch operates when the compressor overheats due to clogged or dirty inlet air filter or if ambient air temperatures exceed nameplate rating or if enclosure dissipated heat loads exceed the rated capacity of the air conditioner. The thermal overload switch will actuate and stop compressor operation. The blowers will continue to operate and the compressor will restart after it has cooled to within the thermal overload cut-in temperature setting.

© 2020 nVent

INSTALLATION INSTRUCTIONS

1. Inspect air conditioner and verify functionality before mounting the air conditioner, see HANDLING AND TESTING THE AIR CONDITIONER on page 3.
2. Using the cutout dimensions shown in this manual, prepare the air “IN” and air “OUT” openings, and mounting bolt hole pattern for the enclosure.
3. Using the gasket kit provided, install gaskets to air conditioner. See Mounting Gasket Kit on page 6 for proper location.
4. Mount air conditioner on enclosure using mounting bolts and washers provided to secure unit to enclosure. Allow unit to remain upright for a minimum of five (5) minutes before starting. Caution! Air conditioner must be in upright position during operation.
5. To avoid cross-threading mounting inserts, start bolts by hand before tightening with a wrench or ratchet driver.
6. Refer to the top of the nameplate for electrical requirements. Connect the power cord to a properly grounded power supply. Use of an extension cord is not recommended. Electrical circuit should be fused with slow blow or HACR circuit breaker.
7. When the unit is equipped with an automatic temperature controller, the controller is preset at the factory for your convenience and should not require adjustment.

SYSTEM CONTROLS

LEVEL I TEMPERATURE CONTROLLER

The Level I controller is located inside the air conditioner. To adjust, disconnect power to the air conditioner. Open the front panel by loosening the front panel screw. Refer to CR23 115V Parts List, page 7 and CR23 230V/460V Parts List, page 8 to locate the controller. Turn the controller adjustment screw slot counter-clockwise to increase and clockwise to decrease the temperature set point, see Figure 1. The thermostat cooling setpoint is indicated by the alignment of the adjustment screw slot with the dial decal. After completing adjustment, close the front panel and tighten the front panel screw. Restore power to the air conditioner for operation.

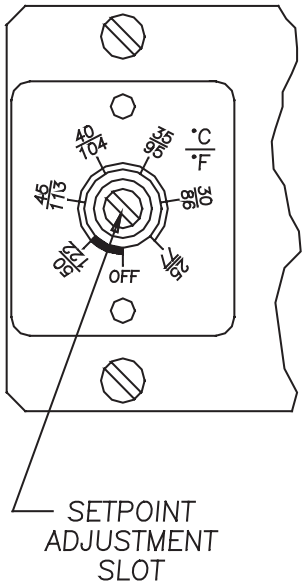

Figure 1

LEVEL II AND III TEMPERATURE CONTROLLER

The Level II and III controller is mounted on the air conditioner front panel and is factory set for standard operation. All operating parameters are programmable for custom applications. Refer to the Level II and III programming and Operating Instruction Manual, 10-1008-161.

© 2020 nVent

TECHNICAL INFORMATION

DESIGN DATA

Model	Voltage	Hz	Phase	BTU/Hr @ 131 F/131 F	Amps @ 131 F/131 F	BTU/Hr @ 95 F/95 F	Amps @ 95 F/95 F	Max Amb Temp °F/°C	Shipping Weight lb./kg
CR230216GXXX	115	50/60	1	1600/1600	4.1/4.0	1400/1500	3.7/3.1	131/55	57/26
CR230226GXXX	230	50/60	1	1660/1730	1.5/1.7	1480/1530	1.1/1.2	131/55	57/26
CR230246GXXX	460	50/60	1	1660/1730	.75/1.02	1480/1530	.55/.72	131/55	67/30

-XXX will be replaced with a three-digit number designating all desired options. Consult the factory for specific model numbers.

DIMENSION DRAWING

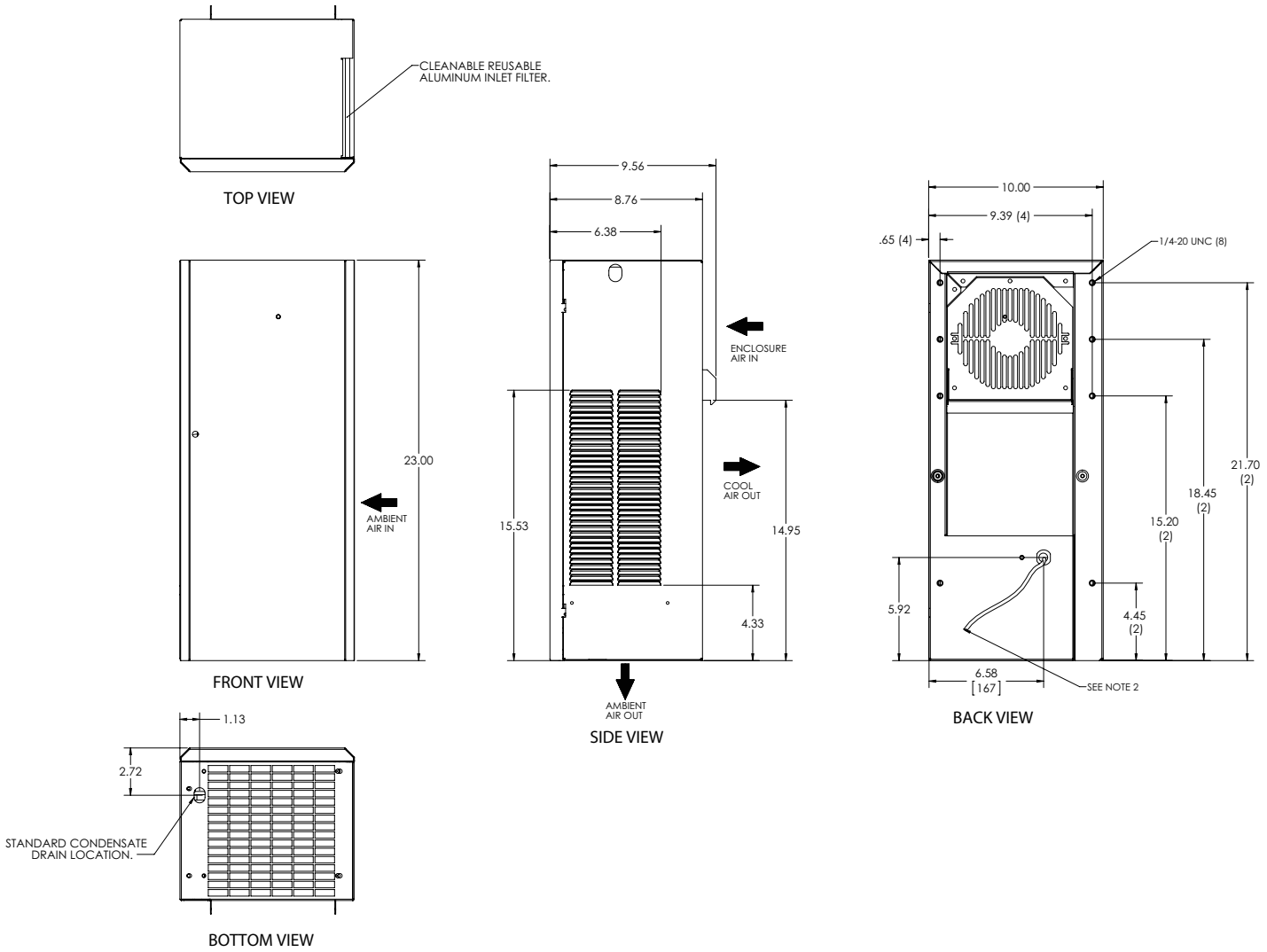

© 2020 nVent

MOUNTING GASKET KIT

DESIGN NOTES

1. Gasket kit included. Apply gasket to rear of air conditioner before mounting on enclosure.
2. Service cord terminated with appropriate plug cap.
3. Millimeter dimensions [ ] are for reference only; do not convert to inch dimensions.
4. Allow at least 4 inch inlet and 6 inch outlet clearance for proper ambient air flow. Allow 20 inch above filter for removal.

Mounting gasket kit part no. 23-2000-00 as applied to rear of CR23.

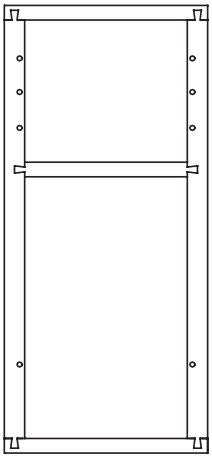

MOUNTING CUTOUT DIMENSIONS

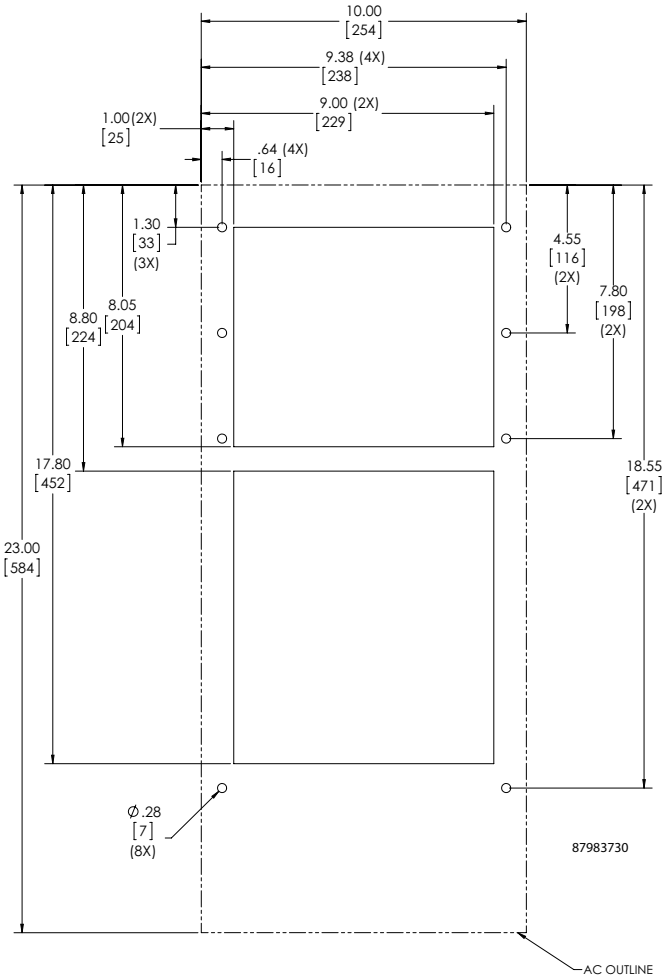

Dashed lines represent the outline of the air conditioner.

© 2020 nVent

CR23 115V PARTS LIST

ITEM	PART DESCRIPTION	PART NUMBER.
1	Condenser Coil	23-2001-00
2	Fan Pan	23-2003-00
3	Condenser Fan	12-1012-01
4	Evaporator Coil	23-2002-00
5	Air Filter	23-2004-00
6	Compressor	89109065
7	Cooling Relay (Level II/II option)	10-1005-21
8	Control Transformer (Level II/III option)	10-1006-94
9	Temperature Controller (Level II/III option)	10-1106-14
10	Thermostat	10-1061-16
11	Electric Heat Element	10-1038-46
12	Thermal Limit Switch	89129368
13	Evaporator Fan	12-1012-01
14	Terminal Block	10-1003-03
15	Filter Drier	52-6028-03
16	Compressor Thermal Overload	89117325
17	Mounting Gasket Kit	23-2000-00
18	Power Cord	52-6035-15
19	Capillary Tube	99-0360-60
20	Compressor Relay	89117321
21	Malfunction Switch	89090313
22	Head Pressure Control Switch	52-6104-26

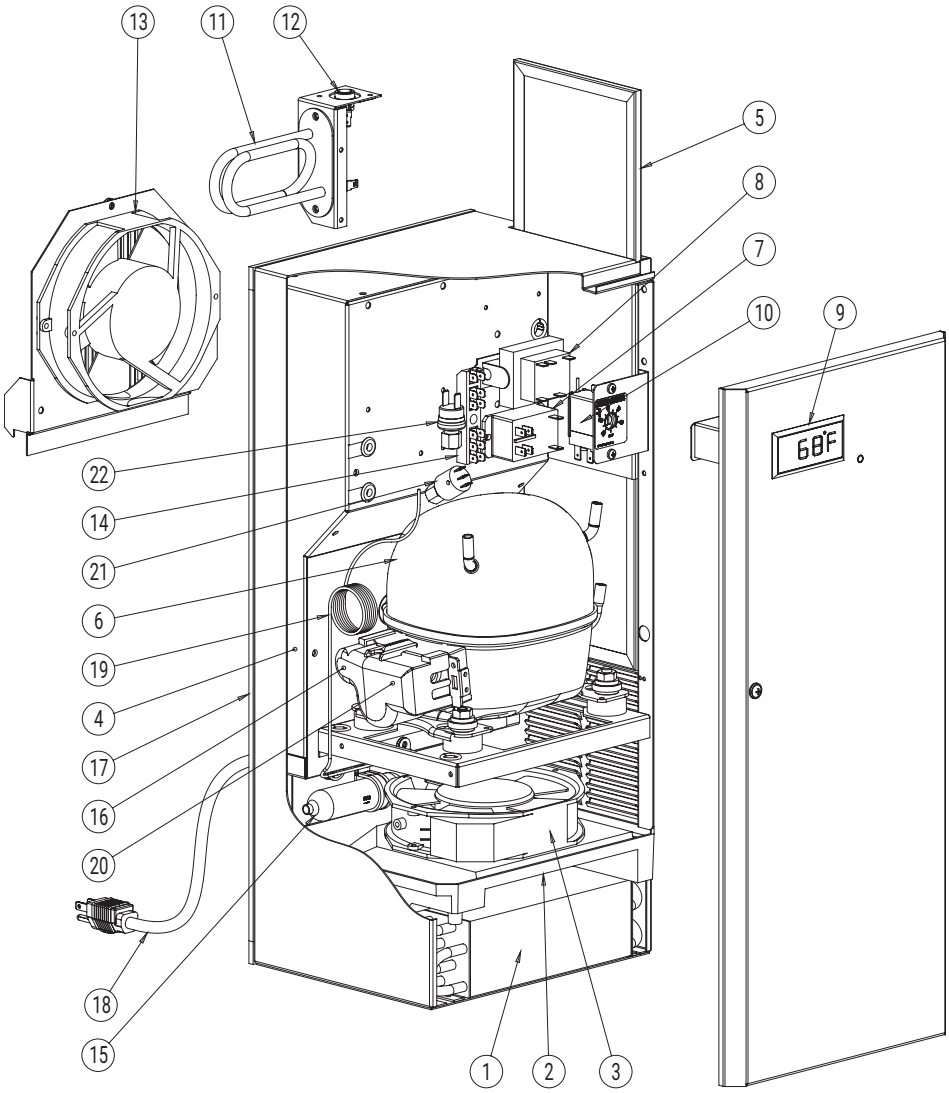

© 2020 nVent

CR23 230V/460V PARTS LIST

ITEM	PART DESCRIPTION	PART NUMBER.
1	Condenser Coil	23-2001-00
2	Fan Pan	23-2003-00
3	Condenser Fan	12-1012-02
4	Evaporator Coil	23-2002-00
5	Air Filter	23-2004-00
6	Compressor	10-1026-101
7	Cooling Relay (Level II/II option)	10-1005-21
8	Control Transformer (Level II/III option)	10-1006-93
9	Temperature Controller (Level II/III option)	10-1106-14
10	Thermostat	10-1061-16
11	Electric Heat Element	10-1038-47
12	Thermal Limit Switch	89129368
13	Evaporator Fan	12-1012-02
14	Terminal Block	10-1003-03
15	Filter Drier	52-6028-03
16	Compressor Thermal Overload	10-1007-68
17	Mounting Gasket Kit	23-2000-00
18	Power Cord	52-6035-74
19	Capillary Tube	99-0360-60
20	Compressor Capacitor	52-6032-10
21	Malfunction Switch	89090313
22	Head Pressure Control Switch	52-6104-26
23	Power Transformer	10-1006-116

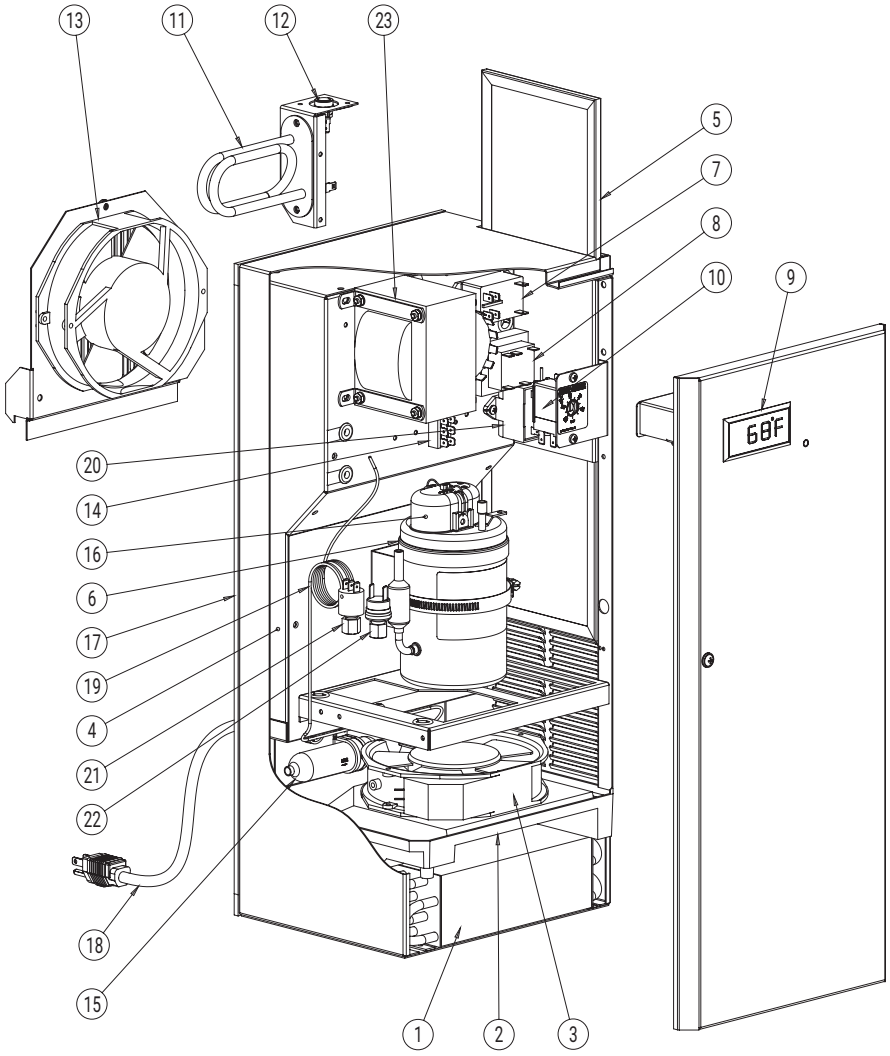

© 2020 nVent

WIRE DIAGRAMS AND SCHEMATICS

WIRE DIAGRAM, LEVEL I, 115V

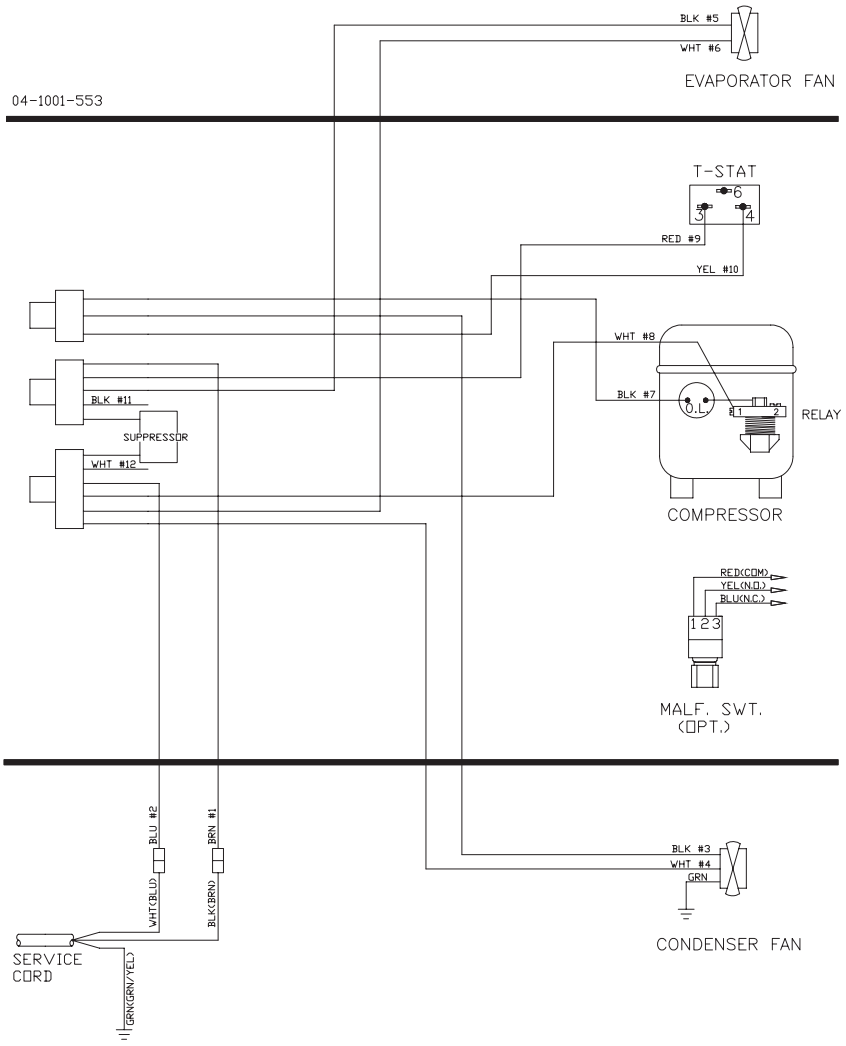

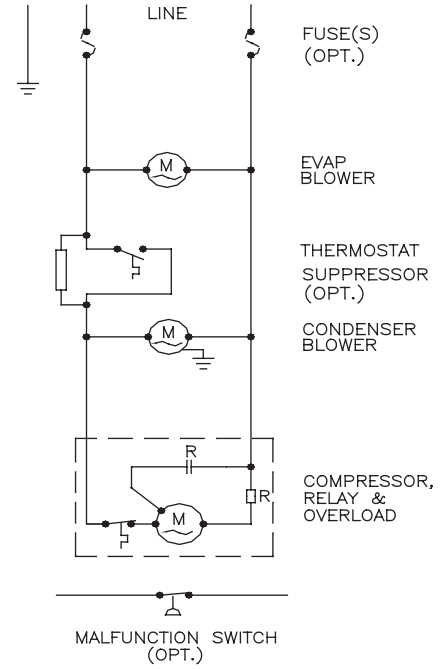

ELECTRICAL SCHEMATIC

© 2020 nVent

WIRE DIAGRAM, LEVEL I WITH ELECTRIC HEATER, 115V

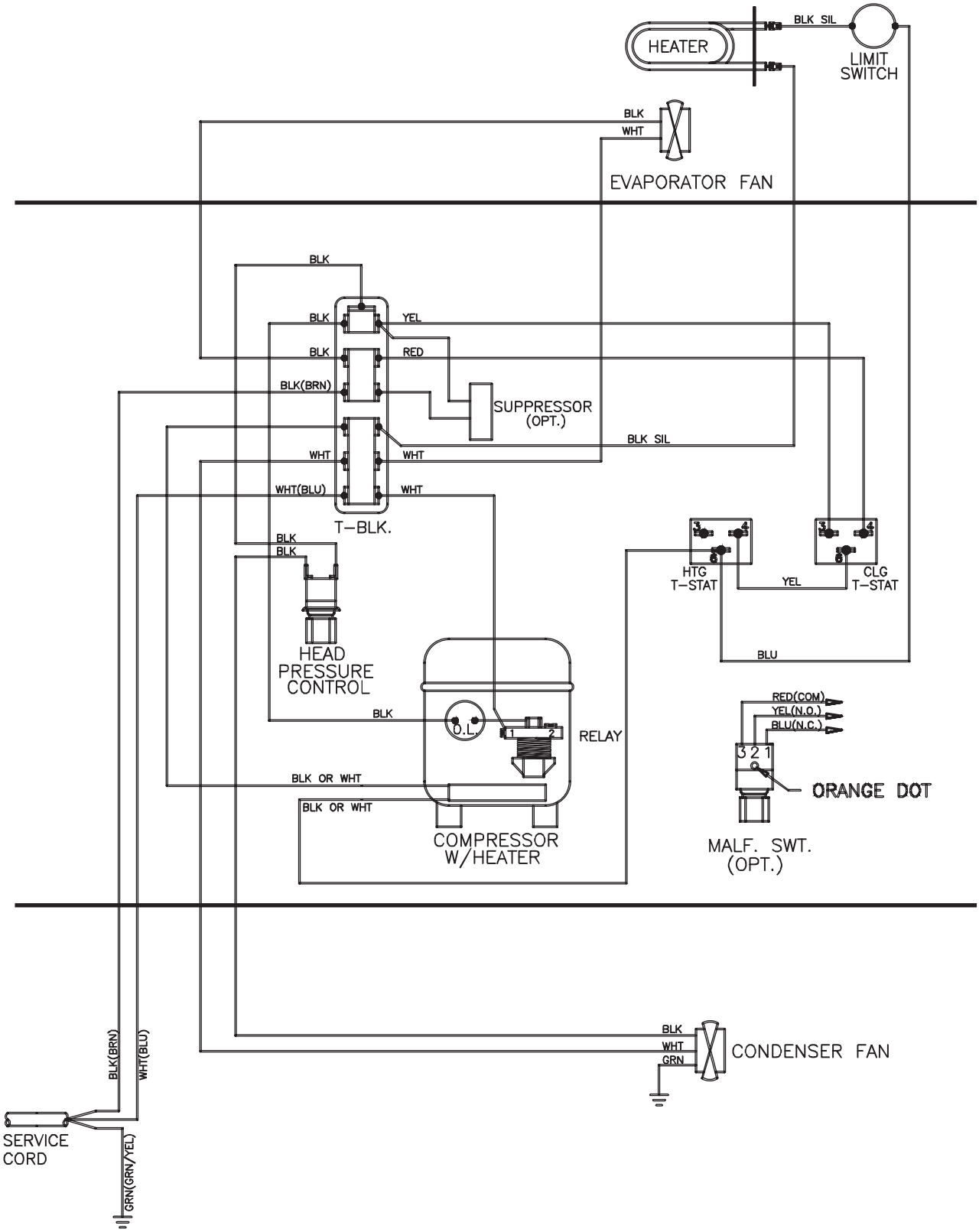

© 2020 nVent

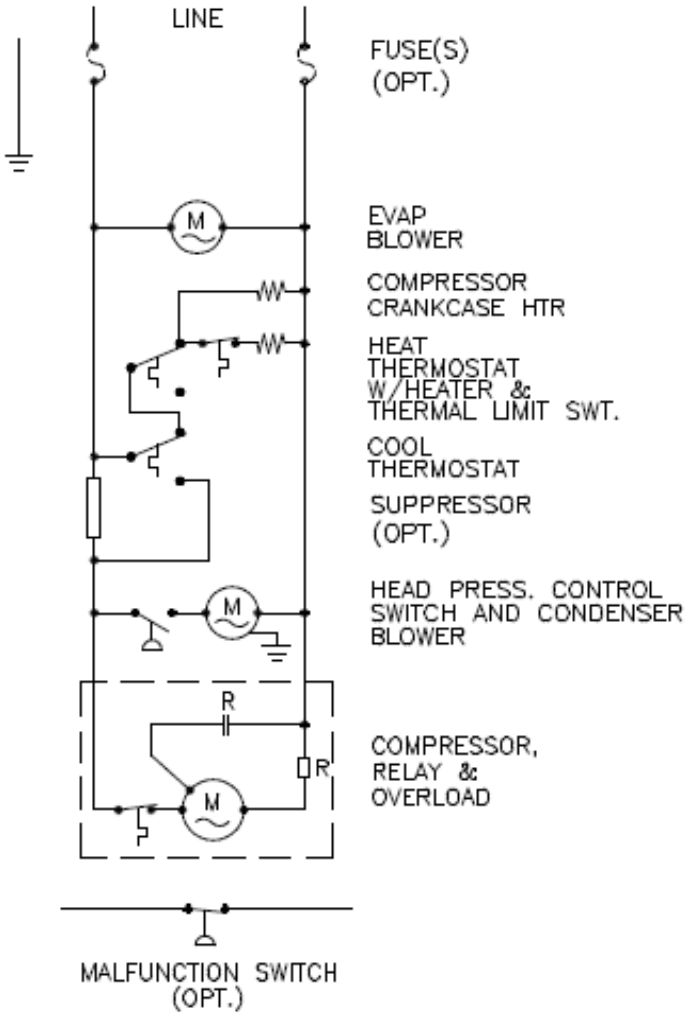

ELECTRICAL SCHEMATIC

NOTE: For voltage, hertz, and options not shown in this manual, refer to the wiring diagram attached to the unit.

© 2020 nVent

WIRE DIAGRAM, LEVEL II AND III, 115V

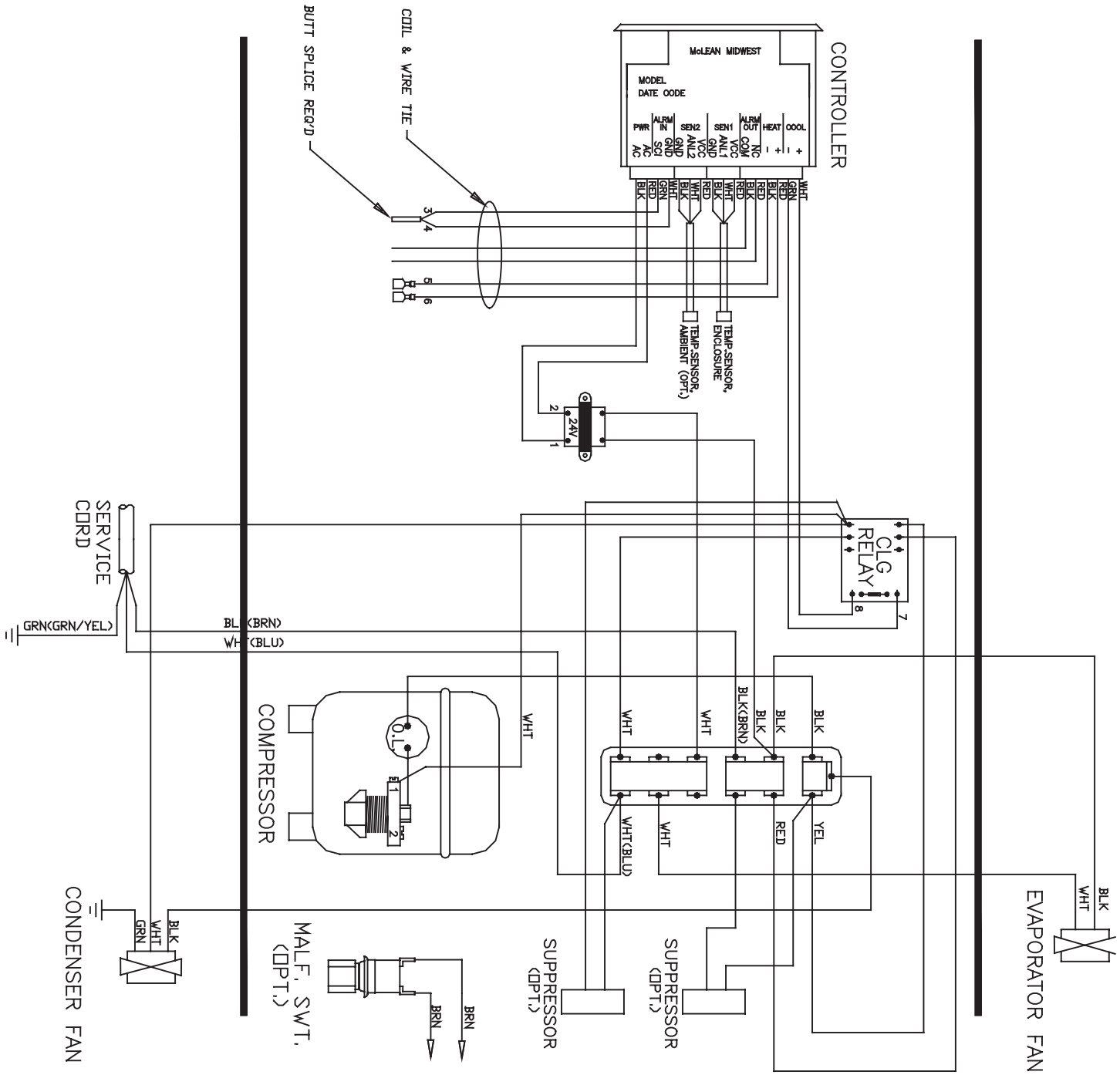

© 2020 nVent

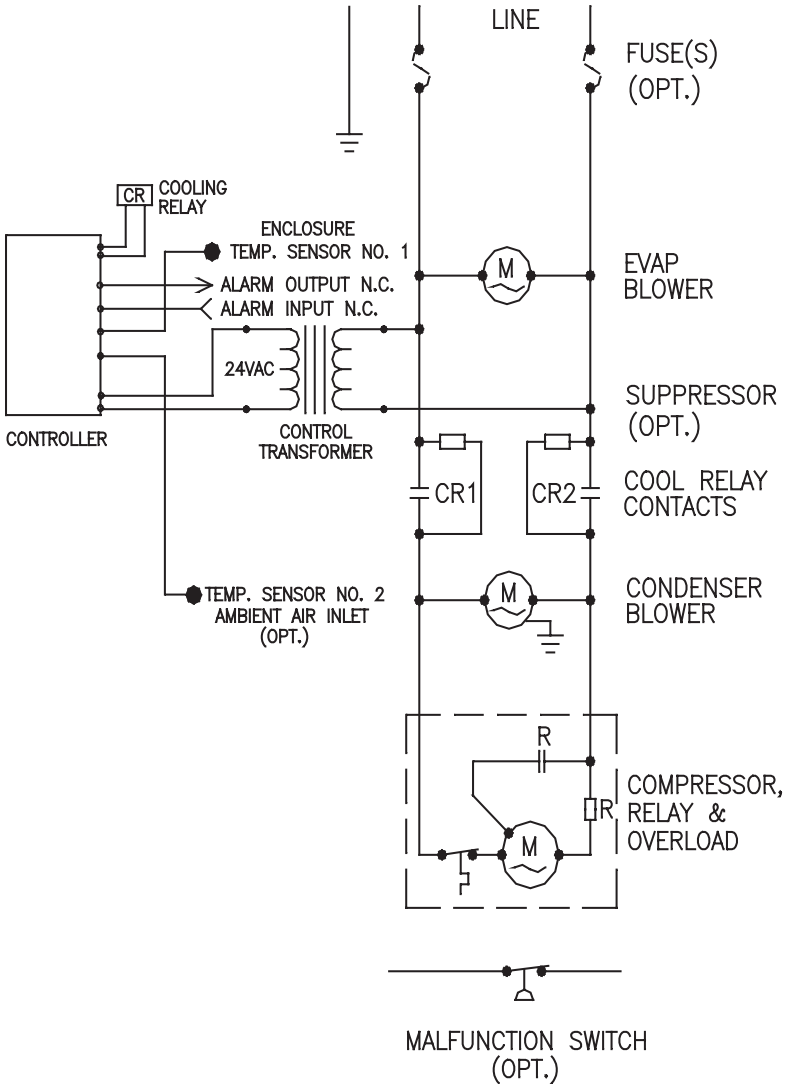

ELECTRICAL SCHEMATIC

© 2020 nVent

WIRE DIAGRAM, LEVEL II AND III WITH ELECTRIC HEATER, 115V

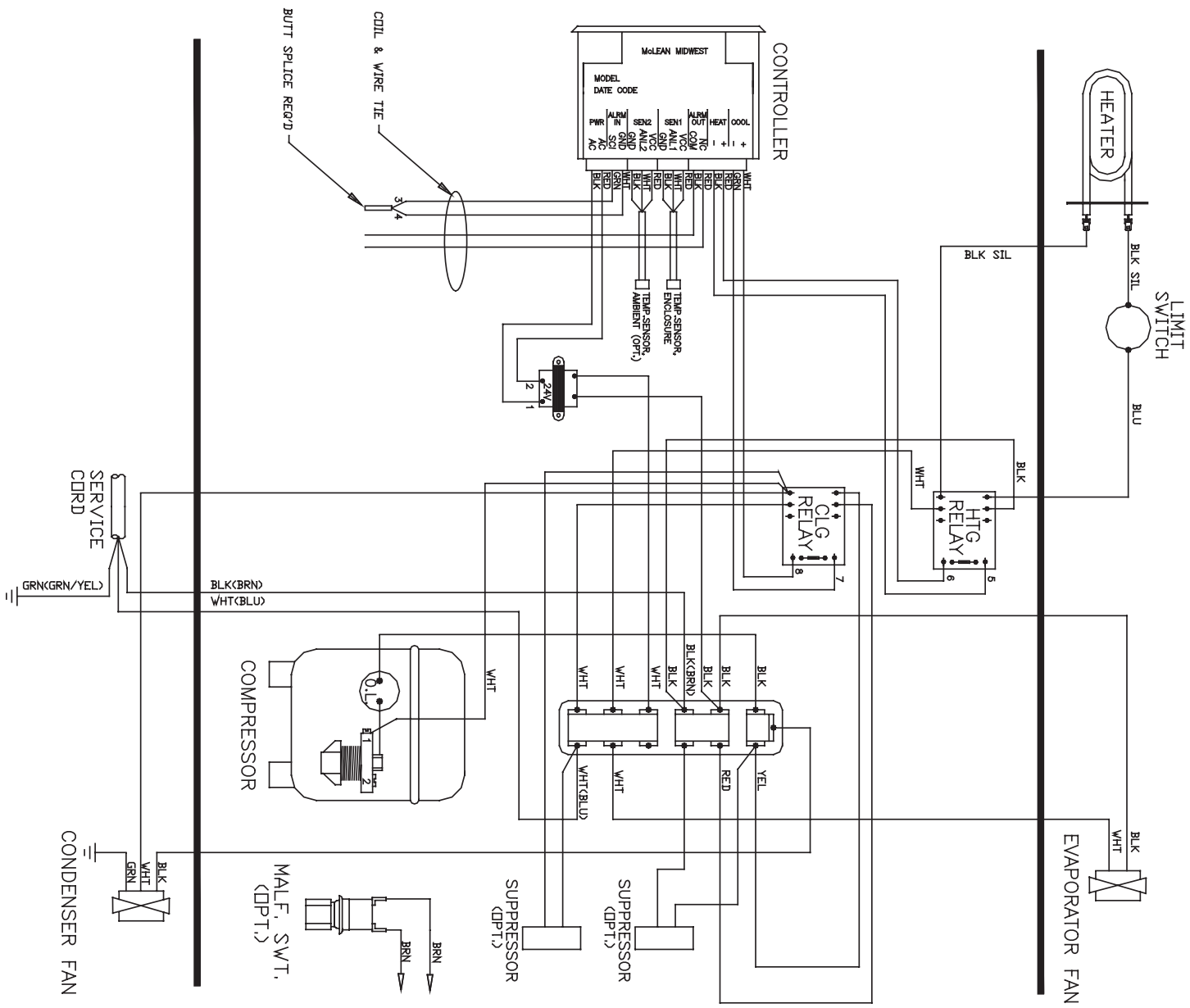

NOTE: For voltage, hertz, and options not shown in this manual, refer to the wiring diagram attached to the unit.

© 2020 nVent

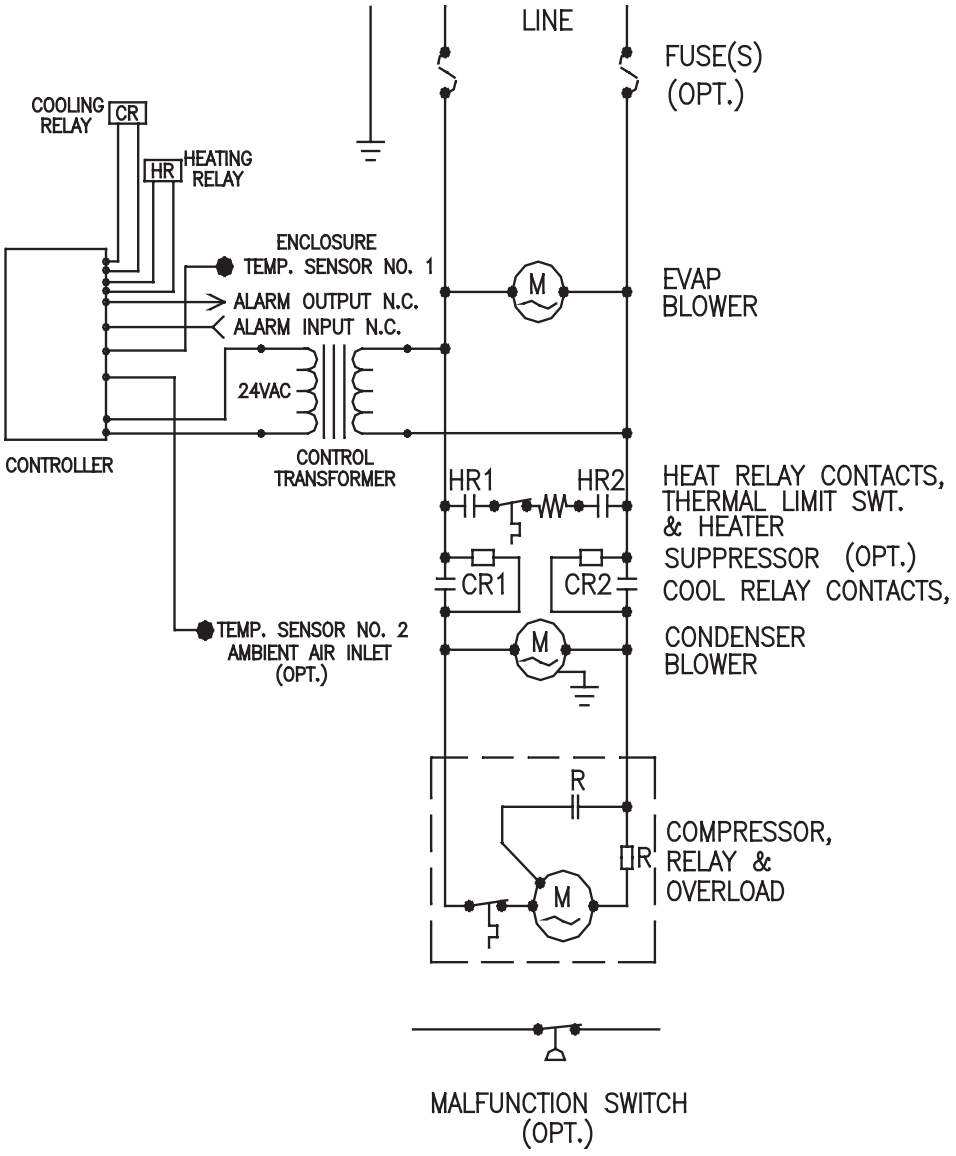

ELECTRICAL SCHEMATIC

© 2020 nVent

WIRE DIAGRAM, LEVEL I, 230V

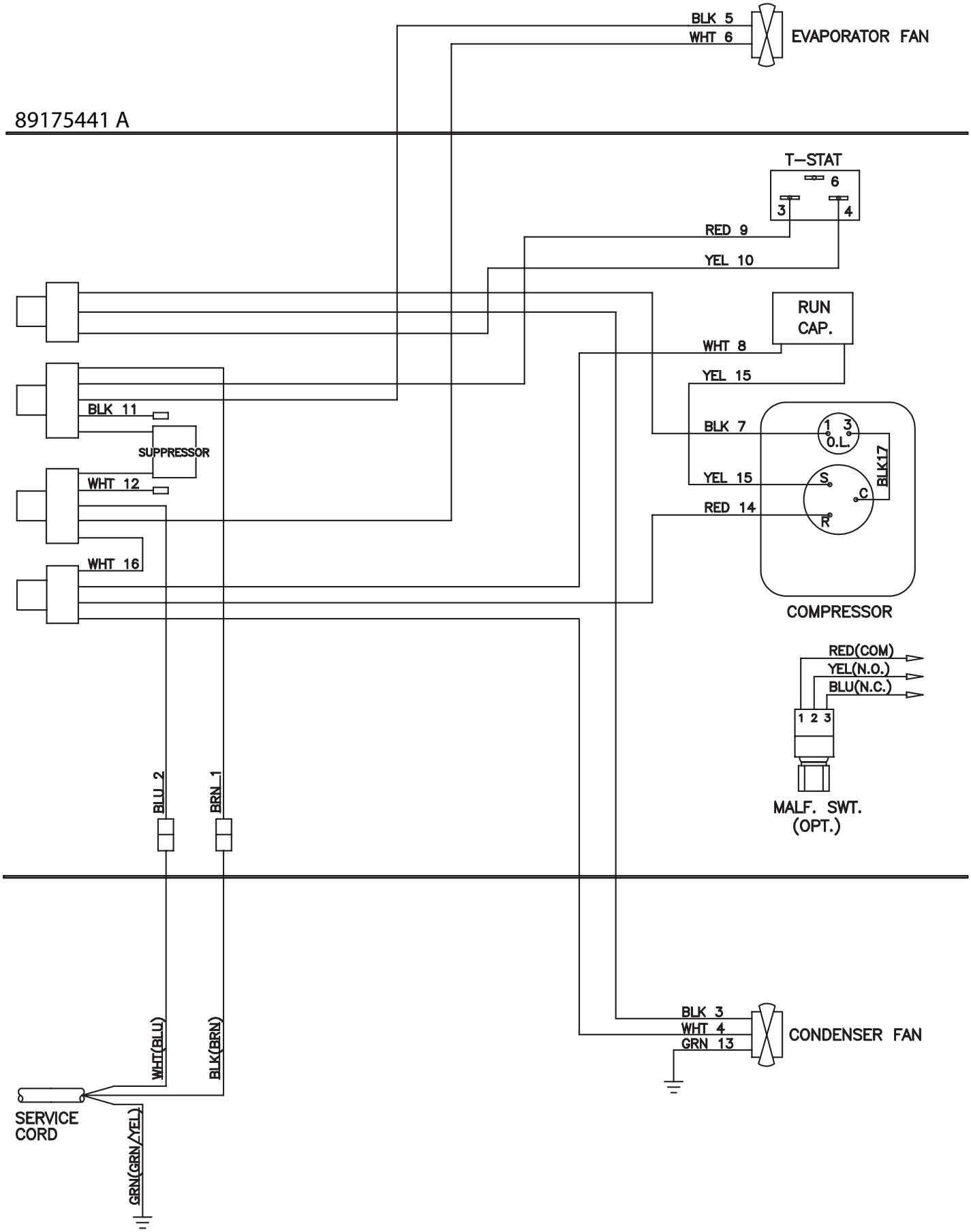

© 2020 nVent

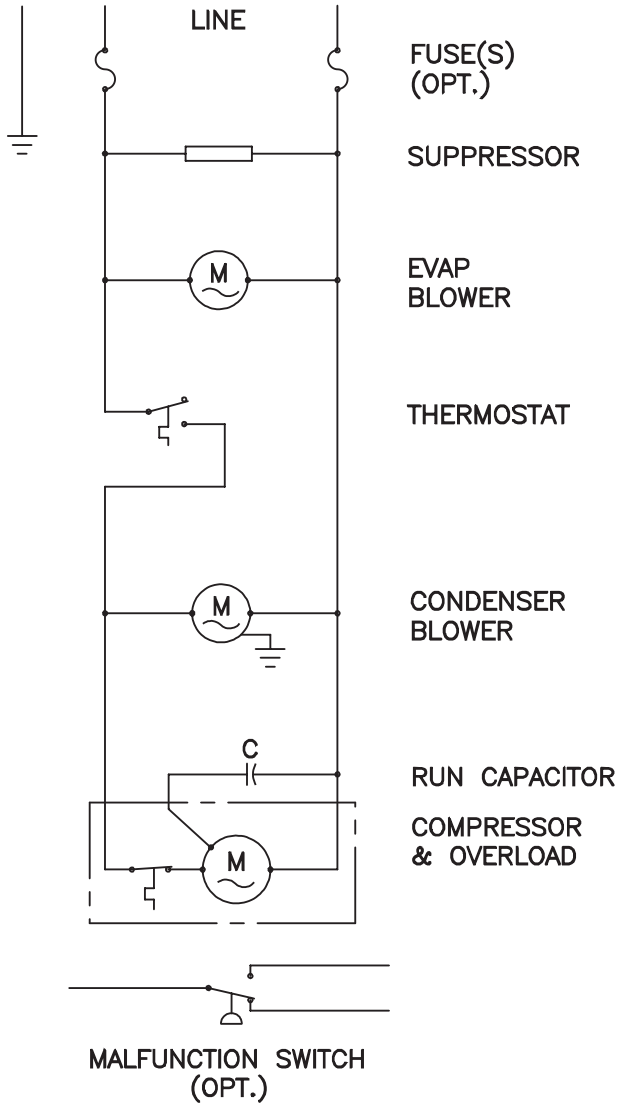

ELECTRICAL SCHEMATIC

89175454 REV.A

© 2020 nVent

WIRE DIAGRAM, LEVEL II AND III, 230V

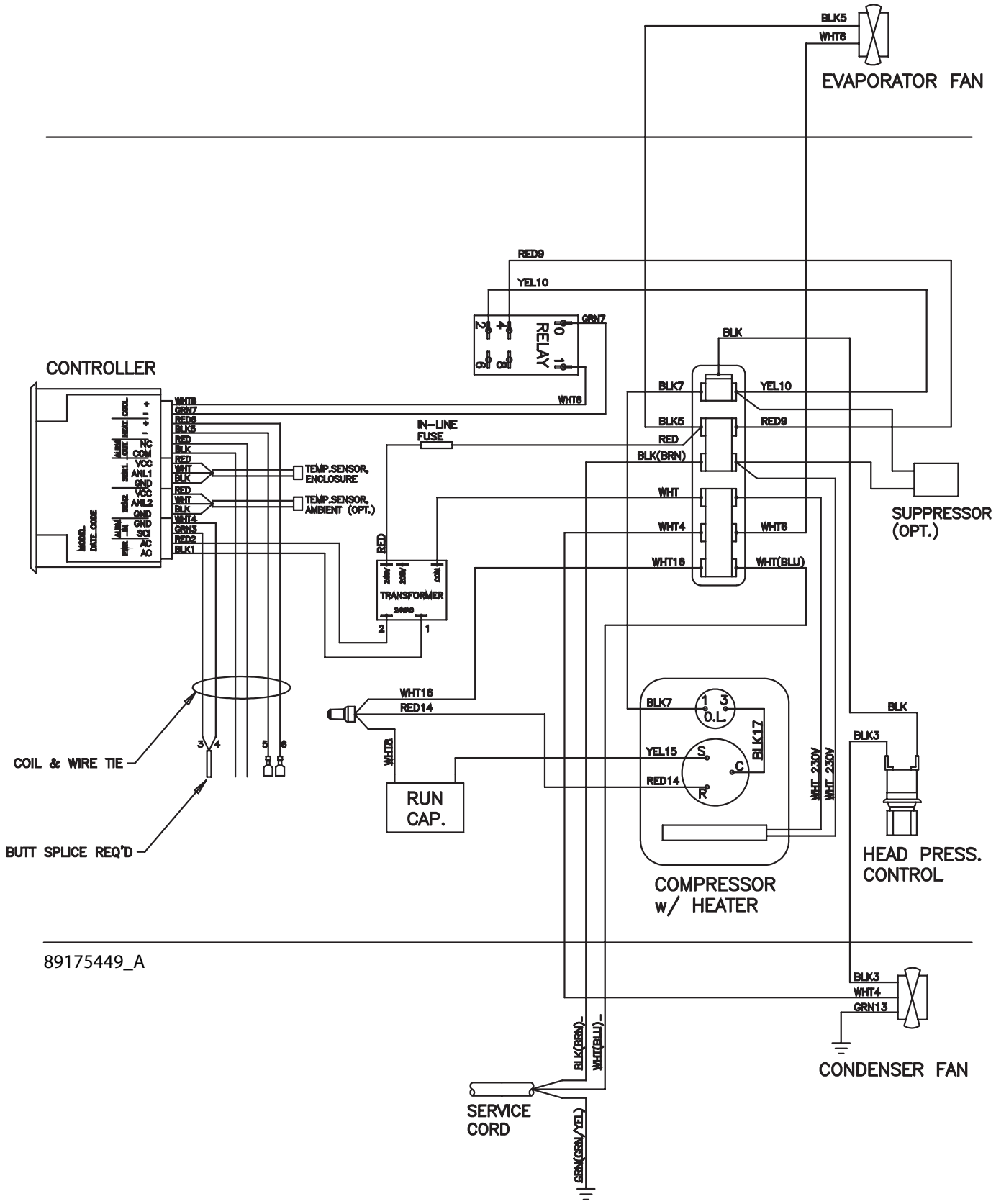

© 2020 nVent

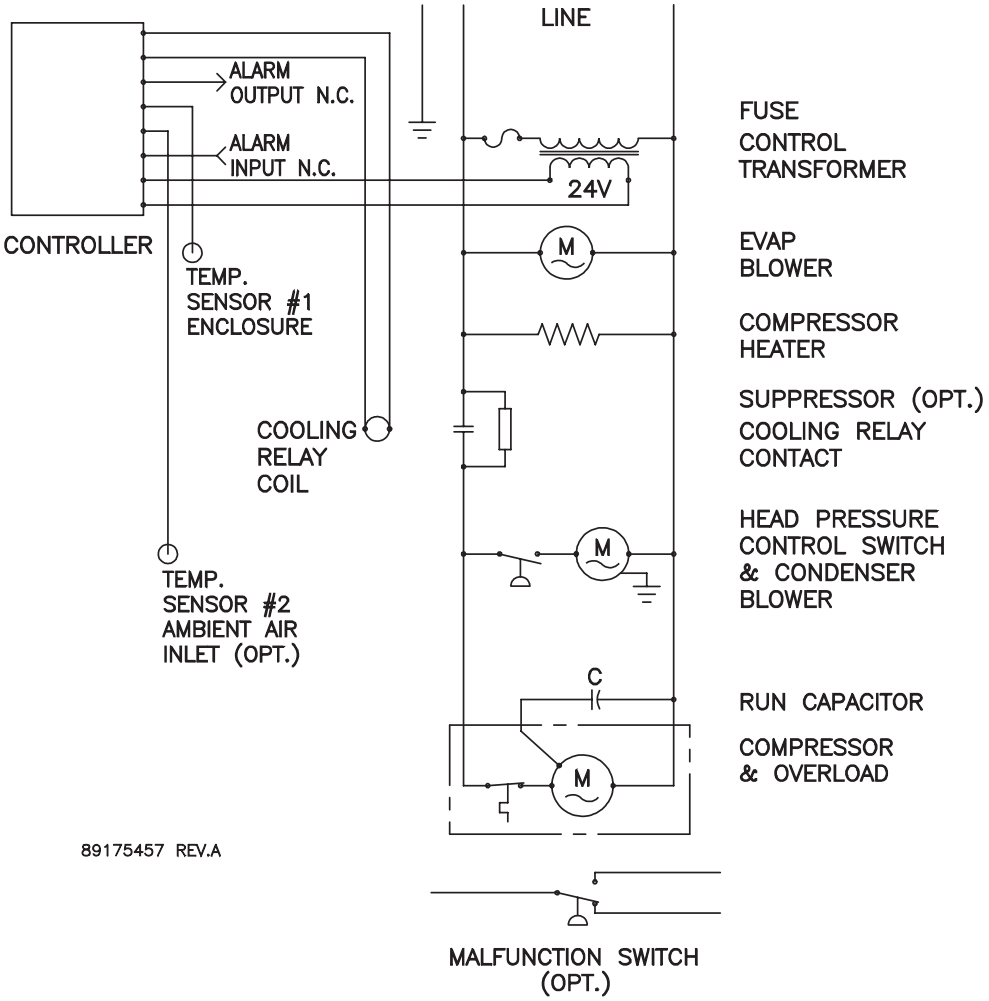

ELECTRICAL SCHEMATIC

NOTE: For voltage, hertz, and options not shown in this manual, refer to the wiring diagram attached to the unit.

© 2020 nVent

WIRE DIAGRAM, LEVEL I, 460V

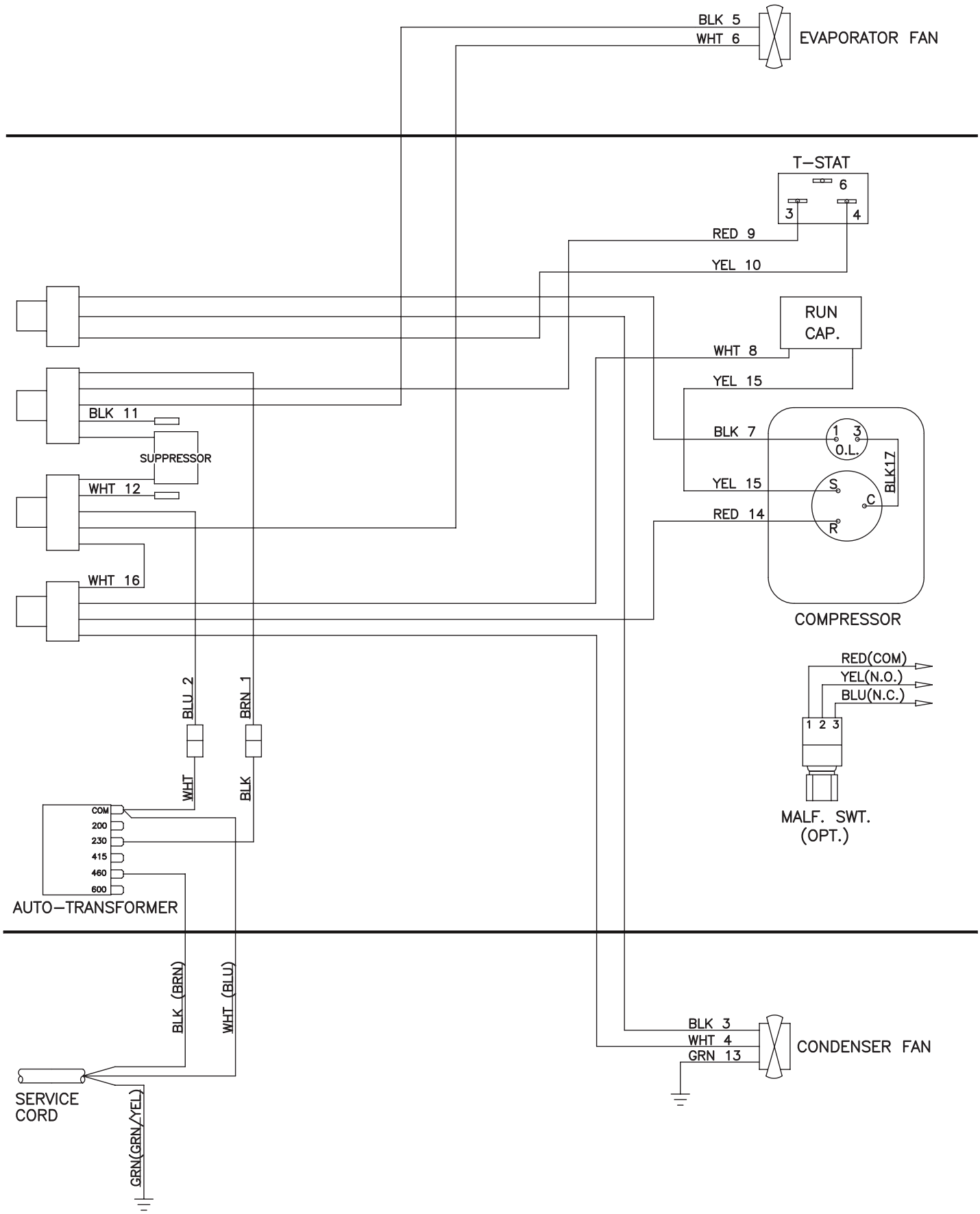

© 2020 nVent

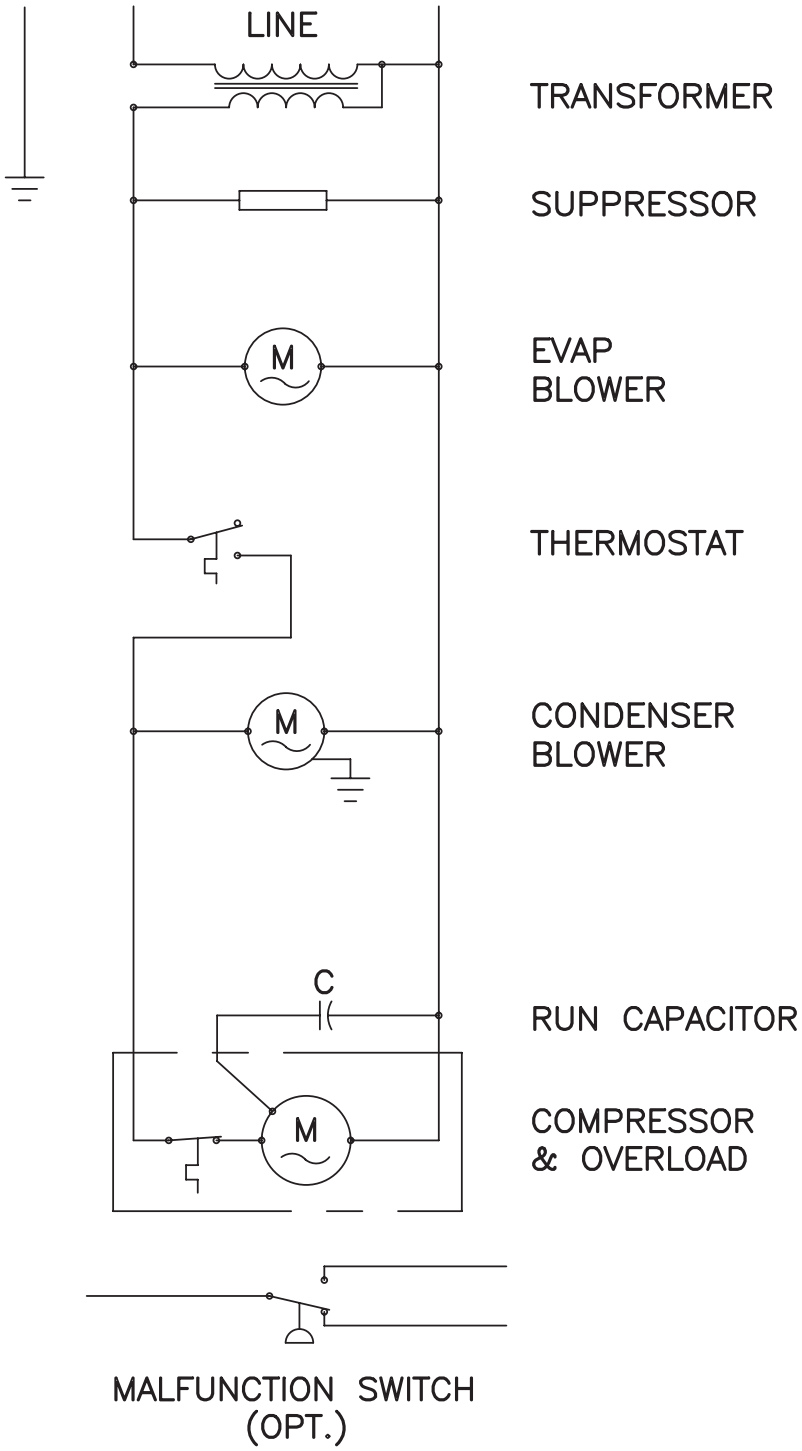

ELECTRICAL SCHEMATIC

89175455 REV.A

© 2020 nVent

TEMPERATURE CONTROL

The electromechanical thermostat is factory preset to 75 F/23 C. To change the temperature setting, remove the nylon plug from the back face of the unit. Use a standard screwdriver to adjust thermostat. For cooler temperatures turn clockwise, for warmer temperatures turn counterclockwise.

PRINCIPLES OF OPERATION

If electrical power to the air conditioner is interrupted and reapplied immediately (within 3 to 5 seconds), the compressor may not restart due to the high back pressure of the compressor. It takes a minimum of one (1) minute after shut-down for the compressor suction and discharge pressures to equalize in order for the air conditioner to restart.

Operating the air conditioner below the minimum ambient temperature or above the maximum ambient temperatures indicated on the nameplate voids all warranties.

It is recommended that the warranty section of this manual be read in order to familiarize yourself with parameters of restricted operation.

The moisture that the enclosure air can contain is limited. If moisture flows from the drain tube continuously this can only mean that ambient air is entering the enclosure. Be aware that frequent opening of the enclosure's door admits humid air which the air conditioner must then dehumidify.

MAINTENANCE

COMPRESSOR

The compressor requires no maintenance. It is hermetically sealed, properly lubricated at the factory and should provide years of satisfactory operating service.

Should the refrigerant charge be lost, recharging ports (access fittings) on the suction and discharge sides of the compressor are provided for recharging and/or checking suction and discharge pressures.

Under no circumstances should the access fitting covers be loosened, removed or tampered with.

Breaking of seals on compressor access fittings during warranty period will void warranty on hermetic system.

Recharging ports are provided for the ease and convenience of reputable refrigeration repair service personnel for recharging the air conditioner.

INLET AIR FILTER

Proper maintenance of the inlet air filter, located behind the front cover, will assure normal operation of the air conditioner. If filter maintenance is delayed or ignored, the maximum ambient temperatures under which the unit is designed to operate will be decreased.

If the compressor's operating temperature increases above designed conditions due to a dirty or clogged filter (or plugged condenser coil), the air conditioner's compressor will stop operating due to actuation of the thermal overload cut-out switch located on the compressor housing. As soon as the compressor temperature has dropped to within the switch's cut-in setting, the compressor will restart automatically. However the above condition will continue to take place until the filter or coil has been cleaned. It is recommended that power to the air conditioner be interrupted intentionally when abnormally high compressor operating temperature causes automatic shut-down of the unit.

The above described shut-down is symptomatic of a clogged or dirty filter, thus causing a reduction in cooling air flow across the surface of the compressor and condenser coil.

Do not run the air conditioner for extended periods of time with the filter removed. Particles of dust, lint, etc., can plug the fins of the condenser coil which will give the same reaction as a plugged filter. The condenser coil is not visible through the filter opening, so protect it with a filter.

Continued operation under the above conditions can and will damage and shorten compressor life. The air conditioner is available with an easily removable inlet filter to facilitate necessary cleaning. There should be no reason to neglect this necessary maintenance.

© 2020 nVent

HOW TO REMOVE, CLEAN OR INSTALL A NEW INLET AIR FILTER

RP aluminum washable air filters are designed to provide excellent filtering efficiency with a high dust holding capacity and a minimum amount of resistance to air flow. Since they are constructed entirely of aluminum, they are lightweight and easy to service. Optimum filter performance is maintained by recoating the filters after washing with RP Super Filter Coat adhesive. To achieve maximum performance from your air handling equipment, air filters should be cleaned on a regular basis.

The inlet air filter is located behind the right side panel. To access the filter, pull from slot on top cover. The filter may now be cleaned or a new filter installed.

Cleaning Instructions:

1. Flush the filter with warm water from the exhaust side to the intake side. DO NOT USE CAUSTICS.
2. After flushing, allow filter to drain. Placing it with a corner down will assure complete drainage.
3. Recoat the filters with RP Super Filter Coat adhesive. When spraying filter do so from both sides for maximum concentration of adhesive.

CONDENSER AND EVAPORATOR AIR MOVERS

Fan motor requires no maintenance. All bearings, shafts, etc. are lubricated for the life of the motor during manufacturing.

If the condenser fan motor (ambient fan) should fail, it is not necessary to remove the air conditioner from the cabinet or enclosure to replace the fan. The condenser fan is mounted on its own bulkhead and is easily accessible by opening the front cover.

⚠ CAUTION

Operation of the air conditioner in areas containing airborne caustics or chemicals can rapidly deteriorate filters, condenser coils, blowers and motors, etc. Contact nVent Equipment Protection for special recommendations.

REFRIGERANT LOSS

Each air conditioner is thoroughly tested prior to leaving the factory to insure against refrigeration leaks. Shipping damage or microscopic leaks not found with sensitive electronic refrigerant leak detection equipment during manufacture may require repair or recharging of the system. This work should only be performed by qualified professionals, generally available through a local, reputable air conditioning repair or service company.

Refer to the data on the nameplate which specifies the type of refrigerant and the charge size in ounces.

Before recharging, make sure there are no leaks and that the system has been properly evacuated into a deep vacuum.

© 2020 nVent

TROUBLE SHOOTING

BASIC AIR CONDITIONING TROUBLE SHOOTING CHECK LIST

1. Check manufacturer's nameplate located on the unit for correct power supply.
2. Turn on power to the unit. The evaporator (Enclosure or "COLD" air) fan should come on. Is there airflow?

YES, proceed to step 3.	
NO, possible problem: • Open motor winding • Stuck fan motor • Obstructed blades	**Repair or Replace defective part**

3. Check thermostat setting and adjust thermostat to the lowest setting. This should turn on the condenser fan and compressor. Did condenser fan and compressor come on when the thermostat was turned on?

YES, proceed to step 4.	
NO, possible problem: • Defective thermostat	**Replace part**

4. Are both fans and the compressor running? If not, the unit will not cool properly.
5. Check condenser (Ambient or "HOT" air) fan for airflow. Is there airflow?

YES, proceed to step 6.	
NO, possible problem: • Defective thermostat • Open motor winding • Stuck fan motor • Obstructed blades	**Repair or Replace defective part**

6. Carefully check the compressor for operation - motor should cause slight vibration, and the outer case of the compressor should be warm. Is the compressor showing signs of this?

YES, wait 5 minutes, then proceed to step 7.	
NO, possible problem: • Defective thermostat • Defective capacitor • Defective overload • Defective relay	**Repair or Replace defective part**

7. Make sure the coils are clean. Then check evaporator "air in" and "air out" temperatures. If the temperatures are the same:

• Possible loss of refrigerant • Possible bad valves in the compressor	**Repair or Replace defective part**

8. To check for a bad thermostat, turn power off to the unit. Remove control box cover and place both thermostat wires onto one terminal (replace control box cover for safety). This will bypass the switch in the thermostat. Turn on the power. If both fans and the compressor come on, the thermostat needs to be replaced.

© 2020 nVent

SYMPTOMS AND POSSIBLE CAUSES:

SYMPTOM	POSSIBLE CAUSE
Unit won't cool	Fans not running
	Compressor not running
	Compressor runs, but has bad valves
	Loss of refrigerant
Compressor tries to start but won't run	Low line voltage at start. Should be +/-10% rated voltage.
	Compressor motor stuck
	Bad relay
	Bad overload switch
	Bad run/start capacitor
Unit blows breakers	Undersized breaker/fuse or not time delayed
	Short in system
Getting water in enclosure	Drain plugged
	Drain tube kinked
	Enclosure not sealed (allowing humidity in)

For additional technical support (amp draw, pressures, temperatures), contact nVent Equipment Protection at 800-896-2665.

F-GAS INFORMATION

	CR230216GXXX	CR230226GXXX CR230246GXXX
Refrigerant Kühlmittel Chłodziwo	R134a	R134a
GWP	1430	1430
Factory Charge Füllmenge durch Hersteller Opłata Fabryczna	284 Grams 284 Gramm 284 Gramów	298 Grams 298 Gramm 298 Gramów
CO_2 Equivalent CO_2 Equivalent CO_2 Ekwilalent	0.41 Tons 0,41 Tonnen 0,41Tony	0.43 Tons 0,43 Tonnen 0,43 Tony

© 2020 nVent

NOTES

© 2020 nVent

NOTES

© 2020 nVent

nVent
2100 Hoffman Way
Anoka, MN 55303 USA
☎ +1.763.422.2211
+1.763.576.3200

nVent.com

© 2020 nVent
P/N 89112522